STATE	FEDERAL PROJECT NO.
N.J.	

State of New Jersey
Department of Transportation

PLANS OF

ROUTE U.S. 46 LITTLE FERRY CIRCLE
FROM FREDERICK STREET TO EAST OF BERGEN TURNPIKE

ROUTE 46 HACKENSACK RIVER BRIDGE
FROM LITTLE FERRY TO RIDGEFIELD PARK

CONTRACT NO. 069950373

WIDENING, GRADING, PAVING, DRAINAGE AND DECK RECONSTRUCTION

BOROUGH OF LITTLE FERRY
VILLAGE OF RIDGEFIELD PARK

COUNTY OF BERGEN

SEE KEY MAP PARTS A AND B – FOR UTILITIES, DESIGN TRAFFIC DATA BRIDGES, WALLS AND SIGN SUPPORT STRUCTURES IN THIS CONTRACT.

PROJECT CATEGORY	NHS – RECON (CA)

SCALES AS INDICATED

JULY 2013 C.S. 0221

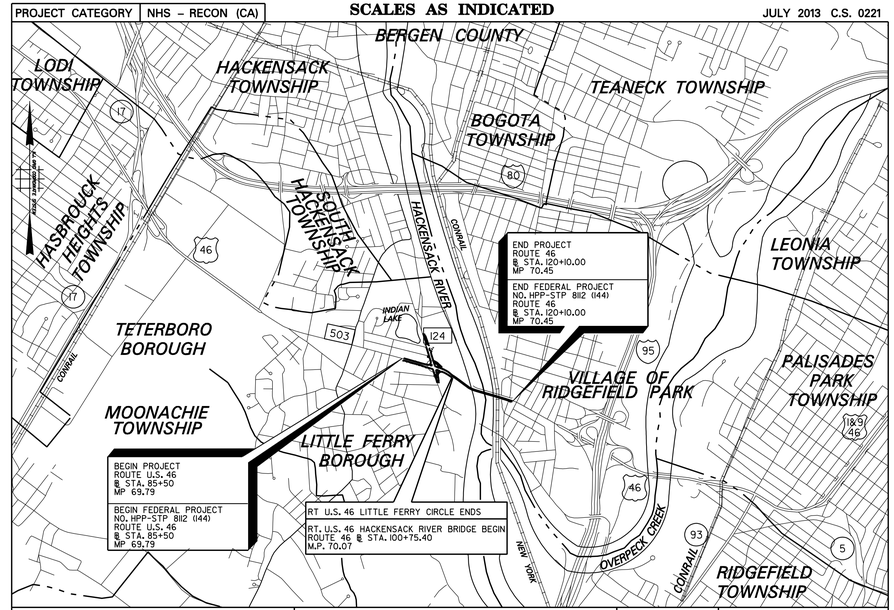

TYPE OF HIGHWAY - UP (ROUTE U.S. 46)	ROW SECTION	ROUTE 46 - SECTION 16

KEY MAP

SCALE IN FEET
2000′ 0 2000′ 4000′

LENGTH OF PROJECT ROUTE U.S. 46 LITTLE FERRY CIRCLE = 1,525 LIN. FT. OR 0.288 MILES
LENGTH OF PROJECT ROUTE U.S. 46 HACKENSACK RIVER BRIDGE = 2,270 LIN. FT. OR 0.366 MILES
TOTAL LENGTH OF PROJECT = 3,460 LIN. FT. OR 0.655 MILES
TOTAL LENGTH OF FEDERAL PROJECT NO. HPP–STP 8112 (144) = 3,460 LIN. FT. OR 0.655 MILES

2007 STANDARD SPECIFICATIONS FOR ROAD AND BRIDGE CONSTRUCTION TO GOVERN

INDEX OF SHEETS – PART A

SHEET NO.	DESCRIPTION
1	KEY MAP
2 – 3	ESTIMATE OF QUANTITIES – ROADWAY
4	KEY MAP – PART A
5 – 7	ESTIMATE – DISTRIBUTION OF QUANTITIES – PART A
8 – 11	TYPICAL SECTIONS
12	PLAN SHEET INDEX & BORING LOCATION PLAN
13 – 19	CONSTRUCTION PLANS
20 – 25	ENVIRONMENTAL & SOIL EROSION & SEDIMENT CONTROL PLANS
26 – 27	PROFILES
28 – 29	TIES
30 – 34	GRADES
35 – 39	DRAINAGE AND UTILITY PLANS
40 – 41	TRAFFIC CONTROL DETAILS
42 – 59	TRAFFIC CONTROL AND STAGING PLANS
60 – 63	TEMPORARY TRAFFIC SIGNAL PLANS
64 – 65	TRAFFIC SIGNAL PLANS
66 – 71	ELECTRICAL PLANS
72 – 80	ELECTRICAL DETAILS
81 – 100	ITS PLANS
101 – 102	LANDSCAPE PLANS
103 – 107	TRAFFIC STRIPING AND SIGNING PLANS
108	SIGN TEXT DATA & U-POST SUPPORT DETAILS
109	METHOD OF CROSS SECTIONS
110 – 126	CROSS SECTIONS
127 – 170	CONSTRUCTION DETAILS

INDEX OF SHEETS – PART B

SHEET NO.	DESCRIPTION
	KEY MAP – PART B
	ESTIMATE – DISTRIBUTION OF QUANTITIES – PART B
	TYPICAL SECTIONS
	PLAN SHEET INDEX
	CONSTRUCTION PLANS
	ENVIRONMENTAL & SOIL EROSION & SEDIMENT CONTROL PLANS
	PROFILES
	GRADES
	TIES
	TRAFFIC STRIPING AND SIGNING PLANS
	ESTIMATE OF QUANTITES – BRIDGE
	BRIDGE PLANS

STANDARD ROADWAY CONSTRUCTION /TRAFFIC CONTROL /BRIDGE CONSTRUCTION DETAILS BOOKLET, 2007, AND STANDARD ELECTRICAL DETAILS BOOKLET, 2007, AND STANDARD ITS DETAILS BOOKLET, 2007 ARE APPLICABLE TO THIS PROJECT EXCEPT FOR THOSE DETAILS CONTAINED HEREIN.

"CHANGES MADE TO THESE PLANS SINCE SIGNATURE BY THE CONSULTANT MAY BE DETERMINED BY COMPARISON OF THE PLANS FILED AT THE DEPARTMENT WITH THOSE FILED AT THE OFFICE OF THE CONSULTANT."

PARSONS BRINCKERHOFF, INC.
CERTIFICATE OF AUTHORIZATION NO. 24GA28029800

MICHAEL D. HELMLINGER
NEW JERSEY PROFESSIONAL ENGINEER LICENSE NO. 24GE03812100

AECOM TECHNICAL SERVICES, INC.
CERTIFICATE OF AUTHORIZATION NO. 24GA28042700

FRANK A. BARAGONA
NEW JERSEY PROFESSIONAL ENGINEER LICENSE NO. 29667

PART A OF 2

SUBMITTED BY _____ DATE _____
DIRECTOR, DIVISION OF PROJECT MANAGEMENT

APPROVED BY _____ DATE _____
STATE TRANSPORTATION ENGINEER

PARSONS BRINCKERHOFF CADD DATA
OPERATOR Detore
PLOT DATE 11-MAR-2013 08:56
PENTABLE pentable-keysht.tbl
DESIGN FILE t:\20063\ks.dgn

STATE	FEDERAL PROJECT NO.
N.J.	

SEQ. NO.	ITEM NO.	DESCRIPTION	UNIT	TOTAL	CONTRACT QUANTITY PART A	CONTRACT QUANTITY PART B	AS - BUILT QUANTITY
1	151006M	PERFORMANCE BOND AND PAYMENT BOND	L.S.	L.S.	L.S.	L.S.	
2	152004M	OWNER'S AND CONTRACTOR'S PROTECTIVE LIABILITY INSURANCE	L.S.	L.S.	L.S.	L.S.	
3	152005P	TRACK PROTECTION	S.Y.			2700	
4	152012P	RAILROAD PROTECTIVE LIABILITY INSURANCE	L.S.	L.S.		L.S.	
5	152015P	POLLUTION LIABILITY INSURANCE	L.S.	L.S.	L.S.	L.S.	
6	153003P	PROGRESS SCHEDULE	L.S.	L.S.	L.S.	L.S.	
7	153006P	PROGRESS SCHEDULE UPDATE	UNIT	22	22		
8	153012P	TRAINEES	HOUR	33,000	10,000	23,000	
9	154003P	MOBILIZATION	L.S.	L.S.	L.S.	L.S.	
10	155012M	FIELD OFFICE TYPE D SET UP	UNIT	1	1		
11	155030M	FIELD OFFICE TYPE D MAINTENANCE	M.O.	26	26		
12	156003M	MATERIALS FIELD LABORATORY SET-UP	UNIT	1	1		
13	156006M	MATERIALS FIELD LABORATORY MAINTENANCE	M.O.	26	26		
14	156009M	CURING FACILITY SET-UP	UNIT	1	1		
15	156012M	CURING FACILTIY MAINTENANCE	M.O.	26	26		
16	156015M	NUCLEAR DENSITY GUAGE	UNIT	1	1		
17	157004M	CONSTRUCTION LAYOUT	L.S.	L.S.	L.S.	L.S.	
18	157006M	MONUMENT	UNIT	19	16	3	
19	157009M	MONUMENT BOX	UNIT	8	6	2	
20	158009M	HEAVY DUTY SILT FENCE, ORANGE	L.F.	2,331	590	1,741	
21	158012M	HEAVY DUTY SILT FENCE, BLACK	L.F.	2,488		2,488	
22	158015M	HAYBALE	UNIT	10		10	
23	158030M	INLET FILTER TYPE 2, 2' X 4'	UNIT	116	110	6	
24	158033M	INLET FILTER TYPE 2, 4' X 4'	UNIT	24	24		
25	158045M	FLOATING TURBIDITY BARRIER, TYPE 2	L.F.	1,010		1,010	
26	158048M	FLOATING TURBIDITY BARRIER, TYPE 3	L.F.	30	30		
27	158051M	DEWATERING BASIN	UNIT	1	1		
28	158060M	CONSTRUCTION DRIVEWAY	TON	157	80	77	
29	158063P	CONCRETE WASHOUT SYSTEM	L.S.	L.S.	L.S.	L.S.	
30	158069M	OIL-WATER SEPARATOR	UNIT	1	1		
31	158072M	OIL ONLY EMERGENCY SPILL KIT, TYPE I	UNIT	4	2	2	
32	158084M	EROSION CONTROL SEDIMENT REMOVAL	C.Y.	650	270	380	
33	159003M	BREAKAWAY BARRICADE	UNIT	65	65		
34	159006M	DRUM	UNIT	203	203		
35	159009M	TRAFFIC CONE	UNIT	50	50		
36	159012M	CONSTRUCTION SIGNS	S.F.	2,787	2,787		
37	159015M	CONSTRUCTION IDENTIFICATION SIGN, 4' X 8'	UNIT	2	2		
38	159021P	CONSTRUCTION BARRIER CURB	L.F.	2,520	2,520		
39	159027M	FLASHING ARROW BOARD, 4' X 8'	UNIT	3	3		
40	159030M	PORTABLE VARIABLE MESSAGE SIGN	UNIT	14	14		
41	159051M	TEMPORARY CRASH CUSHION, INERTIAL BARRIER SYSTEM, 13 MODULES	UNIT	3	3		
42	159107M	TEMPORARY CRASH CUSHION, COMPRESSIVE BARRIER SYSTEM, TYPE 2, 24" WIDE	UNIT	3	3		
43	159108M	TRAFFIC CONTROL TRUCK WITH MOUNTED CRASH CUSHION	UNIT	5	5		
44	159111M	CHANNELIZING GUIDE POST	UNIT	50	50		
45	159114M	REMOVABLE BLACK LINE MASKING TAPE, 6"	L.F.	12,000	12,000		
46	159120M	TEMPORARY PAVEMENT MARKING TAPE, 4"	L.F.	12,000	12,000		
47	159126M	TEMPORARY TRAFFIC STRIPES, 4"	L.F.	72,200	72,200		
48	159132M	TEMPORARY PAVEMENT MARKINGS	S.F.	19,690	19,690		
49	159135M	TEMPORARY PAVEMENT MARKERS	UNIT	880	880		
50	159138M	HMA PATCH	TON	250	250		
51	159141M	TRAFFIC DIRECTOR, FLAGGER	HOUR	620	500	120	
52	159142P	RAILROAD FLAGGER	L.S.	L.S.	L.S.		
53	159144M	EMERGENCY TOWING SERVICE	UNIT	10	10		
54	159163M	REAL-TIME WORK ZONE TRAFFIC SYSTEM	M.O.	24	24		
55	160004M	FUEL PRICE ADJUSTMENT	L.S.	L.S.	L.S.	L.S.	
56	160007M	ASPHALT PRICE ADJUSTMENT	L.S.	L.S.	L.S.		
57	161003P	FINAL CLEANUP	L.S.	L.S.	L.S.	L.S.	
58	201003P	CLEARING SITE	L.S.	L.S.	L.S.	L.S.	
59	202003P	STRIPPING	ACRE	1	1		
60	202006M	EXCAVATION, TEST PIT	C.Y.	210	200	10	
61	202009P	EXCAVATION, UNCLASSIFIED	C.Y.	6,371	6,371		
62	202015P	EXCAVATION, REGULATED MATERIAL	C.Y.	2,740	2,740		
63	202021P	REMOVAL OF PAVEMENT	S.Y.	2,865	2,865		
64	202024M	DISPOSAL OF REGULATED MATERIAL	TON	4,809	4,809		
65	202030M	SOIL SAMPLING AND ANALYSES, REGULATED	UNIT	11	11		
66	202050M	SUBSOIL SCARIFICATION	S.Y.	896	896		
67	203021P	I-14 SOIL AGGREGATE	C.Y.	1,271	1,271		
68	203050M	CONTROLLED LOW STRENGTH MATERIAL	C.Y.	4	4		
69	301006P	SUBBASE	C.Y.	2,289	2,289		
70	302036P	DENSE-GRADED AGGREGATE BASE COURSE, 6" THICK	S.Y.	1,593	1,593		
71	302042P	DENSE-GRADED AGGREGATE BASE COURSE, 8" THICK	S.Y.	10,268	10,268		
72	401009P	HMA MILLING, 3" OR LESS	S.Y.	5,426	2,452	2,974	
73	401027M	POLYMERIZED JOINT ADHESIVE	L.F.	14,255	11,560	2,695	
74	401030M	TACK COAT	GAL	8,892	8,535	357	
75	401036M	PRIME COAT	GAL	3,385	3,385		
76	401063M	HOT MIX ASPHALT 12.5H76 SURFACE COURSE	TON	3,790	3,455	335	
77	401093M	HOT MIX ASPHALT 19H76 INTERMEDIATE COURSE	TON	9,645	9,645		
78	401099M	HOT MIX ASPHALT 25M64 BASE COURSE	TON	3,730	3,730		
79	401108M	CORE SAMPLES, HOT MIX ASPHALT	UNIT	50	30	20	
80	405003P	UNDERLAYER PREPARATION	S.Y.	140	140		
81	453005M	FULL DEPTH CONCRETE PAVEMENT REPAIR, CONCRETE CLASS V	S.Y.	342	342		
82	501003P	TEMPORARY SHEETING	S.F.	1,428	1,428		
83	502168M	STEEL H-PILE, FURNISHED, HP 12 X 74	L.F.	188	188		
84	502186M	STEEL H-PILE, DRIVEN, HP 12 X 74	L.F.	188	188		
85	502207M	PILE SHOE	UNIT	4	4		
86	504006P	REINFORCEMENT STEEL, EPOXY-COATED	L.B.	1,180	1,180		
87	504015P	CONCRETE FOOTING	C.Y.	17	17		
88	601086P	15" CORRUGATED METAL PIPE	L.F.	5	5		
89	601122P	15" REINFORCED CONCRETE PIPE	L.F.	1,797	1,797		
90	601124P	18" REINFORCED CONCRETE PIPE	L.F.	382	382		
91	601128P	24" REINFORCED CONCRETE PIPE	L.F.	308	308		
92	601132P	30" REINFORCED CONCRETE PIPE	L.F.	1,010	1,010		
93	601134P	36" REINFORCED CONCRETE PIPE	L.F.	706	706		
94	601138P	48" REINFORCED CONCRETE PIPE	L.F.	76	76		
95	601154P	96" REINFORCED CONCRETE PIPE	L.F.	50	50		
96	601404P	SUBBASE OUTLET DRAIN	L.F.	257	257		
97	601416P	UNDERDRAIN, TYPE F	L.F.	75	75		
98	601606P	29" X 45" REINFORCED CONCRETE ELLIPTICAL PIPE, CLSS HE-III	L.F.	233	233		
99	601664M	VIDEO INSPECTION OF PIPE	L.F.	4,580	4,580		
100	602012M	INLET, TYPE B	UNIT	34	34		
101	602013M	INLET, TYPE DOUBLE B	UNIT	4	4		
102	602018M	INLET, TYPE E	UNIT	15	15		
103	602019M	INLET, TYPE DOUBLE E	UNIT	1	1		
104	602024M	INLET, TYPE B-1	UNIT	1	1		
105	602027M	INLET, TYPE B-2	UNIT	2	2		
106	602036M	INLET, TYPE E-1	UNIT	1	1		
107	602039M	INLET, TYPE E-2	UNIT	3	3		
108	602047M	INLET, TYPE B1R	UNIT	7	7		
109	602054M	MANHOLE, 4' DIAMETER	UNIT	3	3		
110	602057M	MANHOLE, 5' DIAMETER	UNIT	1	1		
111	602060M	MANHOLE, 6' DIAMETER	UNIT	1	1		
112	602096M	INLET CONVERTED TO MANHOLE	UNIT	3	3		
113	602099M	RESET EXISTING CASTING	UNIT	7	3	4	
114	602100M	INLET, TYPE DOUBLE B2R	UNIT	4	4		
115	602213M	CURB PIECE	UNIT	2		2	
116	602219P	STORMWATER PUMPING STATION	L.S.	L.S.	L.S.		
117	602220M	TRENCH DRAIN	L.F.	182	182		
118	602226M	JUNCTION CHAMBER	UNIT	1	1		
119	602290M	INLET, NON STANDARD, TYPE DOUBLE B1	UNIT	2	2		
120	602290M	INLET, NON STANDARD, TYPE B-3	UNIT	1	1		
121	602290M	INLET, NON STANDARD, TYPE B2R	UNIT	11	11		
122	602090M	INLET, NON STANDARD, TYPE B2X	UNIT	1	1		
123	603036P	RIPRAP STONE CHANNEL PROTECTION, 12" THICK (D50=6")	S.Y.	48		48	
124	605045P	CHAIN-LINK FENCE, 6' HIGH	L.F.	365	365		
125	605150M	GATE, CHAIN-LINK FENCE, 12? WIDE	UNIT	3	3		
126	605168M	GATE, CHAIN-LINK FENCE, 24? WIDE	UNIT	1	1		
127	605171M	GATE, CHAIN-LINK FENCE, 30? WIDE	UNIT	1	1		
128	605183M	TEMPORARY CHAIN-LINK FENCE, 6' HIGH	L.F.	825		825	
129	605212P	RESET FENCE	L.F.	135	135		
130	606012P	CONCRETE SIDEWALK, 4" THICK	S.Y.	1,978	1,861	117	
131	606039P	HOT MIX ASPHALT DRIVEWAY, 6" THICK	S.Y.	1,264	1,264		
132	606043P	STONE OR GRAVEL DRIVEWAY, 4" THICK	S.Y.	382	382		
133	606057P	CONCRETE DRIVEWAY, REINFORCED, 6" THICK	S.Y.	115	115		
134	606075P	CONCRETE ISLAND, 4" THICK	S.Y.	81	81		
135	606084P	DETECTABLE WARNING SURFACE	S.Y.	69	69		
136	607018P	9" X 16" CONCRETE VERTICAL CURB	L.F.	6,486	6,314	172	
137	607021P	9" X 18" CONCRETE VERTICAL CURB	L.F.	1,344	1,344		
138	607054P	12" X 3" CONCRETE SLOPING CURB, DOWELLED	L.F.	692	692		
139	607089M	PRECAST CONCRETE WHEEL STOPS	UNIT	7	7		
140	608003P	NONVEGETATIVE SURFACE, HOT MIX ASPHALT	S.Y.	253	216	37	
141	609003M	BEAM GUIDE RAIL	L.F.	777	714	63	
142	609027M	TANGENT GUIDE RAIL TERMINAL	UNIT	5	1	4	
143	609039M	BEAM GUIDE RAIL ANCHORAGE	UNIT	5	3	2	
144	609075M	REMOVAL OF BEAM GUIDE RAIL	L.F.	597	544	53	
145	609081M	WOOD BEAM RAIL, WEATHERING STEEL POSTS	L.F.	120	120		
146	610003M	TRAFFIC STRIPES, LONG LIFE, EPOXY RESIN 4"	L.F.	18,440	13,240	5,200	
147	610009M	TRAFFIC MARKINGS, THERMOPLASTIC	S.F.	4,898	4,880	18	
148	610012M	RPM, MONO-DIRECTIONAL, WHITE LENS	UNIT	195	170	25	
149	610018M	RPM, MONO-DIRECTIONAL, AMBER LENS	UNIT	40	40		
150	610021M	RPM, BI-DIRECTIONAL, AMBER LENS	UNIT	10	10		
151	610024M	REMOVAL OF RPM	UNIT	0			
152	610036M	REMOVAL OF TRAFFIC STRIPES	L.F.	26,500	26,500		
153	610039M	REMOVAL OF TRAFFIC MARKINGS	S.F.	9,800	9,800		
154	612003P	REGULATORY AND WARNING SIGN	S.F.	822	804	18	
155	612006P	GUIDE SIGN, TYPE GA, STEEL "U" POST SUPPORTS	S.F.	156	156		
156	612034M	RELOCATE SPECIALIZED SIGN	UNIT	1	1		
157	651054P	6" DUCTILE IRON WATER PIPE, CLASS 52	L.F.	249	249		
158	651057P	8" DUCTILE IRON WATER PIPE, CLASS 52	L.F.	50	50		
159	651063P	12" DUCTILE IRON WATER PIPE, CLASS 52	L.F.	70	70		
160	651071P	20" DUCTILE IRON WATER PIPE, CLASS 52	L.F.	50	50		
161	651243M	WATER SERVICE CONNECTION	UNIT	4	4		
162	651249M	RELOCATE FIRE HYDRANT	UNIT	2	2		
163	651255M	RESET WATER VALVE BOX	UNIT	17	17		
164	651258M	WATER AS-BUILT PLAN	L.S.	L.S.	L.S.		
165	652236P	8" POLYVINYL CHLORIDE SEWER PIPE	L.F.	564	564		
166	652417M	SANITARY SEWER SERVICE CONNECTION	UNIT	4	4		
167	652420M	MANHOLE, SANITARY SEWER	UNIT	4	4		
168	652421M	MANHOLE, DOGHOUSE, SANITARY SEWER, 4' DIAMETER	UNIT	2	2		
169	652426M	RECONSTRUCTED MANHOLE, SANITARY SEWER, USING EXISTING	UNIT	2	2		
170	652432M	RESET MANHOLE, SANITARY SEWER, USING EXISTING CASTING	UNIT	10	10		
171	652438M	VIDEO INSPECTION OF SEWER	L.F.	564	564		
172	652441M	SEWER AS-BUILT PLAN	L.S.	L.S.	L.S.		
173	653006P	4" GAS MAIN	L.F.	676	676		
174	653009P	6" GAS MAIN	L.F.	1,095	1,095		
175	653015M	GAS MAIN, TIE-IN ASSISTANCE	M.H.	40	40		
176	653081M	GAS SERVICE CONNECTION	UNIT	7	7		
177	653084M	RESET GAS VALVE BOX	UNIT	5	5		
178	653087P	GAS AS-BUILT PLAN	L.S.	L.S.	L.S.		
179	701015P	2" RIGID METALLIC CONDUIT	L.F.	479	479		
180	701021P	3" RIGID METALLIC CONDUIT	L.F.	864	864		
181	701027P	2" RIGID NONMETALLIC CONDUIT	L.F.	268	268		
182	701029P	RIGID NONMETALLIC MULTIDUCT CONDUIT	L.F.	194	194		

PARSONS BRINCKERHOFF CADD DATA
OPERATOR HeNa QUEUE \\Amprlprt01\PRIPL03_BW_IP
PLOT DATE 11-MAR-2013 09:05
PENTABLE ehx.tbl
DESIGN FILE T:\20063\eq01.dgn

NEW JERSEY DEPARTMENT OF TRANSPORTATION

ESTIMATE OF QUANTITIES

PROJECT : ROUTE U.S. 46 LITTLE FERRY CIRCLE
ROUTE U.S. 46 HACKENSACK RIVER BRIDGE
CONTRACT NO. 069950373

PARSONS BRINCKERHOFF, INC.
CERTIFICATE OF AUTHORIZATION NO. 24GA28029800

MICHAEL D. HELMLINGER
N.J. PROFESSIONAL ENGINEER NO. 24GE03812100

EQ-1 / EQ-2

STATE	FEDERAL PROJECT NO.
N.J.	

SEQ. NO.	ITEM NO.	DESCRIPTION	UNIT	TOTAL	CONTRACT QUANTITY PART A	CONTRACT QUANTITY PART B	AS - BUILT QUANTITY	SEQ. NO.	ITEM NO.	DESCRIPTION	UNIT	TOTAL	CONTRACT QUANTITY PART A	CONTRACT QUANTITY PART B	AS - BUILT QUANTITY
183	701030P	3" RIGID NONMETALLIC CONDUIT	L.F.	41	41										
184	701051P	3 - 1 1/4" FLEXIBLE NONMETALLIC CONDUIT	L.F.	270	270										
185	701095M	JUNCTION BOX, PVC PLASTIC	UNIT	2	2										
186	701102M	18" X 36" JUNCTION BOX	UNIT	14	14										
187	701123M	FOUNDATION, TYPE SFT	UNIT	3	3										
188	701126M	FOUNDATION, TYPE MCF	UNIT	1	1										
189	701132M	FOUNDATION, TYPE P-MC	UNIT	1	1										
190	701138M	FOUNDATION, TYPE STF	UNIT	3	3										
191	701153M	FOUNDATION, TYPE IM	UNIT	1	1										
192	701159M	FOUNDATION, TYPE IM-MC	UNIT	2	2										
193	701171M	METER CABINET, TYPE TL	UNIT	1	1										
194	701177M	METER CABINET, TYPE IM-MC	UNIT	1	1										
195	701192P	GROUND WIRE, NO. 8 AWG	L.F.	1,537	1,537										
196	701198P	MULTIPLE LIGHTING WIRE, NO. 6 AWG	L.F.	404	404										
197	701201P	MULTIPLE LIGHTING WIRE, NO. 8 AWG	L.F.	1,965	1,965										
198	701210P	SERVICE WIRE, NO. 2 AWG	L.F.	255	255										
199	701213P	SERVICE WIRE, NO. 6 AWG	L.F.	220	220										
200	702009M	CONTROLLER, 8 PHASE	UNIT	1	1										
201	702012M	TRAFFIC SIGNAL STANDARD, ALUMINUM	UNIT	2	2										
202	702015M	TRAFFIC SIGNAL STANDARD, STEEL	UNIT	4	4										
203	702021M	TRAFFIC SIGNAL MAST ARM, ALUMINUM	UNIT	2	2										
204	702024M	TRAFFIC SIGNAL MAST ARM, STEEL	UNIT	4	4										
205	702027P	TRAFFIC SIGNAL CABLE, 2 CONDUCTOR	L.F.	670	670										
206	702030P	TRAFFIC SIGNAL CABLE, 5 CONDUCTOR	L.F.	2,790	2,790										
207	702032P	TRAFFIC SIGNAL CABLE, 7 CONDUCTOR	L.F.	380	380										
208	702033P	TRAFFIC SIGNAL CABLE, 10 CONDUCTOR	L.F.	1,950	1,950										
209	702036M	TRAFFIC SIGNAL HEAD	UNIT	20	20										
210	702039M	PEDESTRIAN SIGNAL HEAD	UNIT	12	12										
211	702042M	PUSH BUTTON	UNIT	3	3										
212	702045M	IMAGE DETECTOR	UNIT	6	6										
213	702051P	PPB & LOOP LEAD - IN WIRE (NOTE 3)	L.F.	145	145										
214	702054M	TEMPORARY TRAFFIC SIGNAL LOCATION NO. 1	L.S.	L.S.	L.S.										
215	702060M	CONTROLLER TURN-ON	UNIT	1	1										
216	702078M	TRAFFIC SIGNAL ASSEMBLY, TYPE 30MA-2	UNIT	2	2										
217	702109M	TRAFFIC SIGNAL ASSEMBLY, CLAMP MOUNTED	UNIT	1	1										
218	702110M	BC TRAFF SIG POLE FOUNDATION, 12" DIA	UNIT	2	2										
219	703012M	LIGHTING MAST ARM, ALUMINUM	UNIT	6	6										
220	703018M	LUMINAIRE	UNIT	6	6										
221	703033P	TEMPORARY HIGHWAY LIGHTING SYSTEM	L.S.	L.S.	L.S.										
222	704003M	JUNCTION BOX ITS TYPE A	UNIT	3	3										
223	704009M	JUNCTION BOX ITS TYPE C	UNIT	1	1										
224	704011M	METER CABINET, TYPE ITS	UNIT	1	1										
225	704014M	FOUNDATION, ITS TYPE MC	UNIT	1	1										
226	704029M	COMMUNICATION HUB MODIFICATIONS, LOCATION RT. 80 FIELD TERMINAL	UNIT	1	1										
227	704036M	FOUNDATION CSS	UNIT	1	1										
228	704036M	FOUNDATION CSS TYPE A	UNIT	1	1										
229	704048M	CAMERA STANDARD TYPE A	UNIT	1	1										
230	704060M	CAMERA	UNIT	1	1										
231	704063M	CONTROLLER, CAMERA	UNIT	1	1										
232	704075P	FIBER OPTIC CABLE TYPE D	L.F.	731	731										
233	704081P	FIBER OPTIC CABLE TYPE F	L.F.	204	204										
234	704086P	INSTALL FIBER OPTIC CABLE	L.F.	4,102	4,102										
235	804006P	TOPSOILING, 4" THICK	S.Y.	5,071	5,071										
236	804015P	BORROW TOPSOIL	C.Y.	316	316										
237	804020P	PLANTING SOIL, 36" THICK	S.Y.	896	896										
238	806006P	FERTILIZING AND SEEDING, TYPE A-3	S.Y.	5,071	5,071										
239	806018P	FERTILIZING AND SEEDING, TYPE F	S.Y.	507	507										
240	807009M	TOPOSOIL STABILIZATION, TYPE 3 MAT	S.Y.	268	268										
241	807021M	WASHED RIVERJACK STONE WITH WEED BARRIER	S.Y.	218	218										
242	809003M	STRAW MULCHING	S.Y.	5,071	5,071										
243	810003M	MOWING	ACRE	1	1										
244	811004M	LARGE DECIDUOUS TREE, 2 1/2" - 3" CALIPER, B&B	UNIT	6	6										
245	811024M	SMALL DECIDUOUS TREE, 2 - 2 1/2" CALIPER, B&B	UNIT	13	13										
246	811039M	EVERGREEN TREE, 6 - 7' HIGH, B&B	UNIT	8	8										
247	811078M	EVERGREEN SHRUB, 18-24" HIGH, #3 CONTAINER	UNIT	64	64										
248	811093M	EVERGREEN SHRUB, 18-24" SPREAD, #3 CONTAINER	UNIT	38	38										
249	811111M	PERENNIAL, #1 CONTAINER	UNIT	132	132										
250	811123M	BULB	UNIT	14,500	14,500										
251	811138M	PLANT ESTABLISHMENT PERIOD	L.S.	L.S.	L.S.										
252	811150M	LANDSCAPE ACCENT WALL	S.F.	140	140										
253	811171P	RESET IRRIGATION SYSTEM	UNIT	1	1										

NEW JERSEY DEPARTMENT OF TRANSPORTATION

ESTIMATE OF QUANTITIES

PROJECT : ROUTE U.S. 46 LITTLE FERRY CIRCLE
ROUTE U.S. 46 HACKENSACK RIVER BRIDGE
CONTRACT NO. 069950373

PARSONS BRINCKERHOFF, INC.
CERTIFICATE OF AUTHORIZATION NO. 24GA28029800

MICHAEL D. HELMLINGER
N.J. PROFESSIONAL ENGINEER NO. 24GE03812100

EQ-2 / EQ-2

3

PARSONS BRINCKERHOFF CADD DATA
OPERATOR HeNg
QUEUE \\Ampr1pr+01\PRIPL03_BW_IP
PLOT DATE 11-MAR-2013 09:05
PLOT TIME 09:11:7bi
PENTABLE
DESIGN FILE T:\20063\eq02.dgn

STATE	FEDERAL PROJECT NO.
N.J.	

UTILITIES
UNITED WATER (WATER)
PUBLIC SERVICE ELECTRIC & GAS (GAS)
PUBLIC SERVICE ELECTRIC & GAS (ELECTRIC)
PUBLIC SERVICE ELECTRIC & GAS (TRANSMISSION)
VERIZON (TELEPHONE)
TIME WARNER CABLE (CABLE)
BOROUGH OF LITTLE FERRY (SANITARY SEWER)
BERGEN COUNTY UTILITY AUTHORITY (SANITARY SEWER)
NEW JERSEY DEPARTMENT OF TRANSPORTATION (TRAFFIC SIGNALS)

State of New Jersey
Department of Transportation

PLANS OF

ROUTE U.S. 46 LITTLE FERRY CIRCLE

FROM FREDERICK STREET TO EAST OF BERGEN TURNPIKE

WIDENING, GRADING, PAVING AND DRAINAGE

BOROUGH OF LITTLE FERRY **COUNTY OF BERGEN**

INDEX OF SHEETS – PART A	
SHEET NO.	DESCRIPTION
4	KEY MAP
5 – 7	ESTIMATE – DISTRIBUTION OF QUANTITIES
8 – 11	TYPICAL SECTIONS
12	PLAN SHEET INDEX & BORING LOCATION PLAN
13 – 19	CONSTRUCTION PLANS
20 – 25	ENVIRONMENTAL & SOIL EROSION & SEDIMENT CONTROL PLANS
26 – 27	PROFILES
28 – 29	TIES
30 – 34	GRADES
35 – 39	DRAINAGE AND UTILITY PLANS
40 – 41	TRAFFIC CONTROL DETAILS
42 – 59	TRAFFIC CONTROL AND STAGING PLANS
60 – 63	TEMPORARY TRAFFIC SIGNAL PLANS
64 – 65	TRAFFIC SIGNAL PLANS
66 – 71	ELECTRICAL PLANS
72 – 80	ELECTRICAL DETAILS
81 – 100	ITS PLANS
101 – 102	LANDSCAPE PLANS
103 – 107	TRAFFIC STRIPING AND SIGNING PLANS
108	SIGN TEXT DATA & U-POST SUPPORT DETAILS
109	METHOD OF CROSS SECTIONS
110 – 126	CROSS SECTIONS
127 – 170	CONSTRUCTION DETAILS

STANDARD ROADWAY CONSTRUCTION /TRAFFIC CONTROL /BRIDGE CONSTRUCTION DETAILS BOOKLET, 2007, AND STANDARD ELECTRICAL DETAILS BOOKLET, 2007, AND STANDARD ITS DETAILS BOOKLET, 2007 ARE APPLICABLE TO THIS PROJECT EXCEPT FOR THOSE DETAILS CONTAINED HEREIN.

PROJECT CATEGORY	NHS – RECON (CA)

SCALES AS INDICATED JULY 2013 C.S. 0221

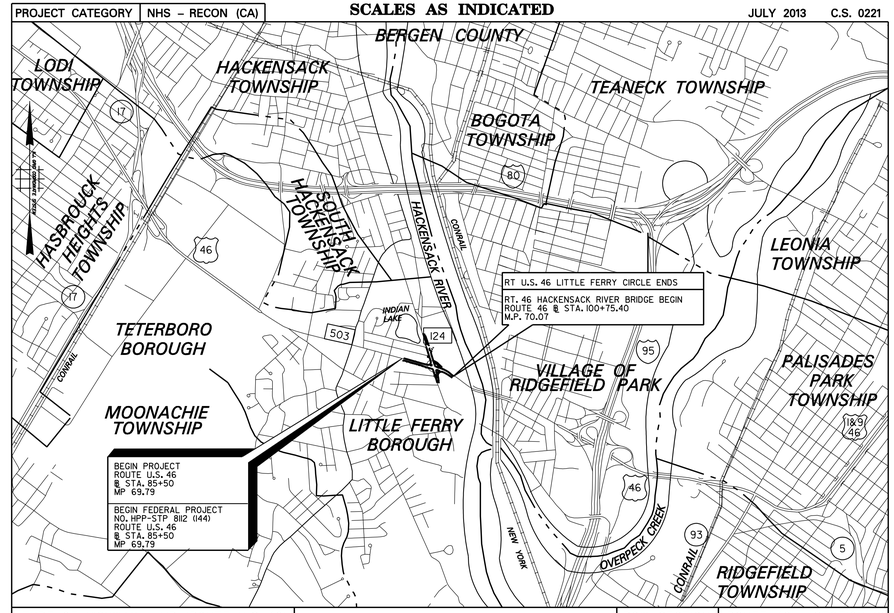

TYPE OF HIGHWAY - UP (ROUTE U.S. 46)	ROW SECTION	ROUTE 46 - SECTION 16

KEY MAP – PART A

SCALE IN FEET
2000′ 0 2000′ 4000′

MID-POINT OF PROJECT
LATITUDE: 40° 51′ 11″ N
LONGITUDE: 74° 02′ 03″ W

DESIGN TRAFFIC DATA			
		ROUTE 46	BERGEN TURNPIKE
A.D.T. (2006)	(2-WAY) =	33,590 VPD	6,720 VPD
A.D.T. (2026)	(2-WAY) =	37,110 VPD	7,430 VPD
D.H.V. (2026)	(2-WAY) =	3,210 VPH	540 VPH
D (2026)	=	57%	52%
T (2026)	=	6.5%	10%
V	=	45 M.P.H.	40 M.P.H.

TOTAL LENGTH OF PROJECT = 1,525 LIN. FT. OR 0.288 MILES

TOTAL LENGTH OF FEDERAL PROJECT NO. HPP-STP 8112 (144) = 3,460 LIN. FT. OR 0.655 MILES

2007 STANDARD SPECIFICATIONS FOR ROAD AND BRIDGE CONSTRUCTION TO GOVERN

"CHANGES MADE TO THESE PLANS SINCE SIGNATURE BY THE CONSULTANT MAY BE DETERMINED BY COMPARISON OF THE PLANS FILED AT THE DEPARTMENT WITH THOSE FILED AT THE OFFICE OF THE CONSULTANT."

PARSONS BRINCKERHOFF, INC.
CERTIFICATE OF AUTHORIZATION NO. 24GA28029800

MICHAEL D. HELMLINGER
NEW JERSEY PROFESSIONAL ENGINEER LICENSE NO. 24GE03812100

SUBMITTED BY _____ DATE _____
DIRECTOR, DIVISION OF PROJECT MANAGEMENT

APPROVED BY _____ DATE _____
STATE TRANSPORTATION ENGINEER

PARSONS BRINCKERHOFF CADD DATA

OPERATOR	Detore
PLOT DATE	11-MAR-2013 08:55
PENTABLE	pentable=keysht.tbl
DESIGN FILE	T:\20063\ks4.dgn

SEQ. NO.	ITEM NO.	DESCRIPTION	UNIT	CONTRACT QUANTITY	PLAN SHEET TOTALS	IF AND WHERE DIRECTED	AS - BUILT QUANTITY	DISTRIBUTION: PLAN SHEET QUANTITY
1	151006M	PERFORMANCE BOND AND PAYMENT BOND	L.S.	L.S.				
2	152004P	OWNER'S AND CONTRACTOR'S PROTECTIVE LIABILITY INSURANCE	L.S.	L.S.				
3	152005P	TRACK PROTECTION	S.Y.					
4	152012P	RAILROAD PROTECTIVE LIABILITY INSURANCE	L.S.					
5	152015P	POLLUTION LIABILITY INSURANCE	L.S.	L.S.				
6	153003P	PROGRESS SCHEDULE	L.S.	L.S.				
7	153006P	PROGRESS SCHEDULE UPDATE	UNIT	22		22		
8	153012P	TRAINEES	HOUR	10,000		10,000		
9	154003P	MOBILIZATION	L.S.	L.S.				
10	155012M	FIELD OFFICE TYPE D SET UP	UNIT	1		1		
11	155030M	FIELD OFFICE TYPE D MAINTENANCE	M.O.	26		26		
12	156003M	MATERIALS FIELD LABORATORY SET-UP	UNIT	1		1		
13	156006M	MATERIALS FIELD LABORATORY MAINTENANCE	M.O.	26		26		
14	156009M	CURING FACILITY SET-UP	UNIT	1		1		
15	156012M	CURING FACILTIY MAINTENANCE	M.O.	26		26		
16	156015M	NUCLEAR DENSITY GUAGE	UNIT	1		1		
17	157004M	CONSTRUCTION LAYOUT	L.S.	L.S.				
18	157006M	MONUMENT	UNIT	16	16			C-2 1; C-3 7; C-4 2; C-5 2; C-6 4
19	157009M	MONUMENT BOX	UNIT	6	6			C-3 3; C-4 1; C-6 2
20	158009M	HEAVY DUTY SILT FENCE, ORANGE	L.F.	590	590			EP-3 216; EP-4 374
21	158012M	HEAVY DUTY SILT FENCE, BLACK	L.F.					
22	158015M	HAYBALE	UNIT					
23	158030M	INLET FILTER TYPE 2, 2' X 4'	UNIT	110	110			EP-2 14; EP-3 63; EP-4 4; EP-5 2; EP-6 27
24	158033M	INLET FILTER TYPE 2, 4' X 4'	UNIT	24	24			EP-2 7; EP-3 10; EP-6 4; TC-4 1; TC-8 2
25	158045M	FLOATING TURBIDITY BARRIER, TYPE 2	L.F.					
26	158048M	FLOATING TURBIDITY BARRIER, TYPE 3	L.F.	30	30			EP-4 30
27	158051M	DEWATERING BASIN	UNIT	1		1		
28	158060M	CONSTRUCTION DRIVEWAY	TON	80		80		
29	158063P	CONCRETE WASHOUT SYSTEM	L.S.	L.S.				
30	158069M	OIL-WATER SEPARATOR	UNIT	1		1		
31	158072M	OIL ONLY EMERGENCY SPILL KIT, TYPE 1	UNIT	2		2		
32	158084M	EROSION CONTROL SEDIMENT REMOVAL	C.Y.	270		270		
33	159003M	BREAKAWAY BARRICADE	UNIT	65		65		
34	159006M	DRUM	UNIT	203		203		
35	159009M	TRAFFIC CONE	UNIT	50		50		
36	159012M	CONSTRUCTION SIGNS	S.F.	2,787		2,787		
37	159015M	CONSTRUCTION IDENTIFICATION SIGN, 4' X 8'	UNIT	2		2		
38	159021P	CONSTRUCTION BARRIER CURB	L.F.	2,520		2,520		
39	159027M	FLASHING ARROW BOARD, 4' X 8'	UNIT	3		3		
40	159030M	PORTABLE VARIABLE MESSAGE SIGN	UNIT	14		14		
41	159051M	TEMPORARY CRASH CUSHION, INERTIAL BARRIER SYSTEM, 13 MODULES	UNIT	3		3		
42	159107M	TEMPORARY CRASH CUSHION, COMPRESSIVE BARRIER, TYPE 2, 24" WIDE	UNIT	3		3		
43	159108M	TRAFFIC CONTROL TRUCK WITH MOUNTED CRASH CUSHION	UNIT	5		5		
44	159111M	CHANNELIZING GUIDE POST	UNIT	50		50		
45	159114M	REMOVABLE BLACK LINE MASKING TAPE, 6"	L.F.	12,000		12,000		
46	159120M	TEMPORARY PAVEMENT MARKING TAPE, 4"	L.F.	12,000		12,000		
47	159126M	TEMPORARY TRAFFIC STRIPES, 4"	L.F.	72,200		72,200		
48	159132M	TEMPORARY PAVEMENT MARKINGS	S.F.	19,690		19,690		
49	159135M	TEMPORARY PAVEMENT MARKERS	UNIT	880		880		
50	159138M	HMA PATCH	TON	250		250		
51	159141M	TRAFFIC DIRECTOR, FLAGGER	HOUR	500		500		
52	159142P	RAILROAD FLAGGER	L.S.	L.S.				
53	159144M	EMERGENCY TOWING SERVICE	UNIT	10		10		
54	159163M	REAL-TIME WORK ZONE TRAFFIC SYSTEM	M.O.	24		24		
55	160004M	FUEL PRICE ADJUSTMENT	L.S.	L.S.				
56	160007M	ASPHALT PRICE ADJUSTMENT	L.S.	L.S.				
57	161003P	FINAL CLEANUP	L.S.	L.S.				
58	201003P	CLEARING SITE	L.S.	L.S.				
59	202003P	STRIPPING	ACRE	1		1		
60	202006M	EXCAVATION, TEST PIT	C.Y.	200		200		
61	202009P	EXCAVATION, UNCLASSIFIED	C.Y.	6,371	6,371			C-3 1,333; C-6 10; C-7 437; DU-2 170; TC-5 73.0; X-17 4,348
62	202015P	EXCAVATION, REGULATED MATERIAL	C.Y.	2,740	2,740			C-7 1,052; X-17 1,688
63	202021P	REMOVAL OF PAVEMENT	S.Y.	2,865	2,865			C-2 250; C-3 583; C-5 60; C-6 1,780; TC-5 192
64	202024M	DISPOSAL OF REGULATED MATERIAL	TON	4,809	4,809			X-17 4,809
65	202030M	SOIL SAMPLING AND ANALYSES, REGULATED	UNIT	11		11		
66	202050M	SUBSOIL SCARIFICATION	S.Y.	896	896			C-3 896
67	203021P	I-14 SOIL AGGREGATE	C.Y.	1,271	1,271			C-7 751; X-17 520
68	203050M	CONTROLLED LOW STRENGTH MATERIAL	C.Y.	4	4			DU-2 4
69	301006P	SUBBASE	C.Y.	2,289	2,289			C-2 148; C-3 1,211; C-4 120; C-5 115; C-6 609; TC-5 43; TC-6 43
70	302036P	DENSE-GRADED AGGREGATE BASE COURSE, 6" THICK	S.Y.	1,593	1,593			C-3 191; C-6 229; C-7 1,173
71	302042P	DENSE-GRADED AGGREGATE BASE COURSE, 8" THICK	S.Y.	10,268	10,268			C-2 662; C-3 5,575; C-4 434; C-5 531; C-6 2,720; TC-5 154; TC-6 192
72	401009P	HMA MILLING, 3" OR LESS	S.Y.	2,452	2,452			C-2 1,026; C-4 453; C-5 257; C-6 716
73	401027M	POLYMERIZED JOINT ADHESIVE	L.F.	11,560		11,560		
74	401030M	TACK COAT	GAL	8,535		8,535		
75	401036M	PRIME COAT	GAL	3,385		3,385		
76	401063M	HOT MIX ASPHALT 12.5H76 SURFACE COURSE	TON	3,455	3,141	314		C-2 337; C-3 1,466; C-4 215; C-5 300; C-6 670; C-7 135; TC-5 18
77	401093M	HOT MIX ASPHALT 19H76 INTERMEDIATE COURSE	TON	9,645	8,771	874		C-2 452; C-3 6,824; C-4 908; C-5 89; C-6 432; TC-5 33; TC-6 33
78	401099M	HOT MIX ASPHALT 25M64 BASE COURSE	TON	3,730	3,396	334		C-2 191; C-3 1,724; C-4 125; C-5 148; C-6 898; C-7 203; TC-5 T626; 55
79	401108M	CORE SAMPLES, HOT MIX ASPHALT	UNIT	30		30		
80	405003P	UNDERLAYER PREPARATION	S.Y.	140	140			C-4 140
81	453005M	FULL DEPTH CONCRETE PAVEMENT REPAIR, CONCRETE CLASS V	S.Y.	342	342			C-2 261; C-3 81
82	501003P	TEMPORARY SHEETING	S.F.	1,428	1,428			DTL-37 1,428
83	502168M	STEEL H-PILE, FURNISHED, HP 12 X 74	L.F.	188	188			DTL-37 188
84	502186M	STEEL H-PILE, DRIVEN, HP 12 X 74	L.F.	188	188			DTL-37 188
85	502207M	PILE SHOE	UNIT	4	4			DTL-37 4
86	504006P	REINFORCEMENT STEEL, EPOXY-COATED	L.B.	1,180	1,180			DTL-37 1,180
87	504015P	CONCRETE FOOTING	C.Y.	17	17			DTL-37 17
88	601086P	15" CORRUGATED METAL PIPE	L.F.	5	5			DU-5 5
89	601122P	15" REINFORCED CONCRETE PIPE	L.F.	1,797	1,797			DU-1 340; DU-2 1,035; DU-3 307; DU-5 40; TC-4 75
90	601124P	18" REINFORCED CONCRETE PIPE	L.F.	382	382			DU-1 15; DU-2 174; DU-5 193
91	601128P	24" REINFORCED CONCRETE PIPE	L.F.	308	308			DU-2 237; DU-5 71
92	601132P	30" REINFORCED CONCRETE PIPE	L.F.	1,010	1,010			DU-1 317; DU-2 19; DU-5 674
93	601134P	36" REINFORCED CONCRETE PIPE	L.F.	706	706			DU-2 445; DU-5 74; TC-8 187
94	601138P	48" REINFORCED CONCRETE PIPE	L.F.	76	76			DU-2 76

STATE	FEDERAL PROJECT NO.
N.J.	

NEW JERSEY DEPARTMENT OF TRANSPORTATION

ESTIMATE-DISTRIBUTION OF QUANTITIES

PROJECT : ROUTE U.S. 46 LITTLE FERRY CIRCLE
CONTRACT NO. 069950373

PARSONS BRINCKERHOFF, INC.
CERTIFICATE OF AUTHORIZATION NO. 24GA28029800
MICHAEL D. HELMLINGER
N.J. PROFESSIONAL ENGINEER NO. 24GE03812100

EDQ-1 / EDQ-3

PARSONS BRINCKERHOFF CADD DATA
OPERATOR: HeNa | QUEUE: \\Amprlprt01\PRIPL03_BW_IP
PLOT DATE: 11-MAR-2013 09:05
PENTABLE: ehx.tbl
DESIGN FILE: T:\20063\ed01.dgn

SEQ. NO.	ITEM NO.	DESCRIPTION	UNIT	CONTRACT QUANTITY	PLAN SHEET TOTALS	IF AND WHERE DIRECTED	AS - BUILT QUANTITY	DISTRIBUTION: PLAN SHEET QUANTITY													
95	601154P	96" REINFORCED CONCRETE PIPE	L.F.	50	50			DU-2	50												
96	601404P	SUBBASE OUTLET DRAIN	L.F.	257	257			DU-2	205	DU-3	52										
97	601416P	UNDERDRAIN, TYPE F	L.F.	75	75			DU-3	75												
98	601606P	29" X 45" REINFORCED CONCRETE ELLIPTICAL PIPE, CLSS HE-III	L.F.	233	233			DU-1	93	DU-2	140										
99	601664M	VIDEO INSPECTION OF PIPE	L.F.	4,580		4,580															
100	602012M	INLET, TYPE B	UNIT	34	34			DU-1	7	DU-2	19	DU-3	4	DU-5	4						
101	602013M	INLET, TYPE DOUBLE B	UNIT	4	4			DU-2	4												
102	602018M	INLET, TYPE E	UNIT	15	15			DU-1	3	DU-2	6	DU-5	3	TC-4	1	TC-8	2				
103	602019M	INLET, TYPE DOUBLE E	UNIT	1	1			DU-2	1												
104	602024M	INLET, TYPE B-1	UNIT	1	1			DU-5	1												
105	602027M	INLET, TYPE B-2	UNIT	2	2			DU-5	2												
106	602036M	INLET, TYPE E-1	UNIT	1	1			DU-2	1												
107	602039M	INLET, TYPE E-2	UNIT	3	3			DU-1	3												
108	602047M	INLET, TYPE B1R	UNIT	7	7			DU-1	3	DU-5	4										
109	602054M	MANHOLE, 4' DIAMETER	UNIT	3	3			DU-5	2	TC-8	1										
110	602057M	MANHOLE, 5' DIAMETER	UNIT	1	1			DU-5	1												
111	602060M	MANHOLE, 6' DIAMETER	UNIT	1	1			DU-5	1												
112	602096M	INLET CONVERTED TO MANHOLE	UNIT	3	3			DU-1	1	DU-5	2										
113	602099M	RESET EXISTING CASTING	UNIT	3	3			DU-3	1	DU-4	2										
114	602100M	INLET, TYPE DOUBLE B2R	UNIT	4	4			DU-2	3	DU-5	1										
115	602213M	CURB PIECE	UNIT																		
116	602219P	STORMWATER PUMPING STATION	L.S.	L.S.																	
117	602220M	TRENCH DRAIN	L.F.	182	182			DU-1	142	DU-2	40										
118	602226M	JUNCTION CHAMBER	UNIT	1	1			DU-2	1												
119	602290M	INLET, NON STANDARD, TYPE DOUBLE B1	UNIT	2	2			DU-2	1	DU-5	1										
120	602290M	INLET, NON STANDARD, TYPE B-3	UNIT	1	1			DU-2	1												
121	602290M	INLET, NON STANDARD, TYPE B2R	UNIT	11	11			DU-2	6	DU-5	5										
122	602290M	INLET, NON STANDARD, TYPE B2X	UNIT	1	1			DU-2	1												
123	603036P	RIPRAP STONE CHANNEL PROTECTION, 12" THICK (D50=6")	S.Y.																		
124	605045P	CHAIN-LINK FENCE, 6' HIGH	L.F.	365	365			C-4	150	C-7	365										
125	605150M	GATE, CHAIN-LINK FENCE, 12? WIDE	UNIT	3	3			C-7	3												
126	605168M	GATE, CHAIN-LINK FENCE, 24? WIDE	UNIT	1	1			C-7	1												
127	605171M	GATE, CHAIN-LINK FENCE, 30? WIDE	UNIT	1	1			C-6	1												
128	605183M	TEMPORARY CHAIN-LINK FENCE, 6' HIGH	L.F.																		
129	605212P	RESET FENCE	L.F.	135	135			C-6	135												
130	606012P	CONCRETE SIDEWALK, 4" THICK	S.Y.	1,861	1,861			C-2	363	C-3	803	C-4	234	C-5	69	C-6	388	E-1	2	ITS-3	2
131	606039P	HOT MIX ASPHALT DRIVEWAY, 6" THICK	S.Y.	1,264	1,264			C-2	510	C-3	337	C-4	135	C-5	14	C-6	268				
132	606043P	STONE OR GRAVEL DRIVEWAY, 4" THICK	S.Y.	382	382			C-3	382												
133	606057P	CONCRETE DRIVEWAY, REINFORCED, 6" THICK	S.Y.	115	115			C-2	93	C-3	22										
134	606075P	CONCRETE ISLAND, 4" THICK	S.Y.	81	81			C-3	69	C-5	7	C-6	5								
135	606084P	DETECTABLE WARNING SURFACE	S.Y.	69	69			C-2	17	C-3	32	C-4	4	C-5	2	C-6	14				
136	607018P	9" X 16" CONCRETE VERTICAL CURB	L.F.	6,314	6,314			C-2	1,219	C-3	2,484	C-4	589	C-5	461	C-6	1,561				
137	607021P	9" X 18" CONCRETE VERTICAL CURB	L.F.	1,344	1,344			C-2	77	C-6	348	C-7	614	TC-18	305						
138	607054P	12" X 3" CONCRETE SLOPING CURB, DOWELLED	L.F.	692	692			TC-5	692												
139	607089M	PRECAST CONCRETE WHEEL STOPS	UNIT	7	7			C-2	7												
140	608003P	NONVEGETATIVE SURFACE, HOT MIX ASPHALT	S.Y.	216	216			C-3	50	C-4	166										
141	609003M	BEAM GUIDE RAIL	L.F.	714	714			C-3	148	C-4	566										
142	609027M	TANGENT GUIDE RAIL TERMINAL	UNIT	1	1			C-4	1												
143	609039M	BEAM GUIDE RAIL ANCHORAGE	UNIT	3	3			C-3	1	C-4	2										
144	609075M	REMOVAL OF BEAM GUIDE RAIL	L.F.	544	544			C-3	77	C-4	467										
145	609081M	WOOD BEAM RAIL, WEATHERING STEEL POSTS	L.F.	120	120			C-7	120												
146	610003M	TRAFFIC STRIPES, LONG LIFE, EPOXY RESIN 4"	L.F.	13,240		13,240															
147	610009M	TRAFFIC MARKINGS, THERMOPLASTIC	S.F.	4,880		4,880															
148	610012M	RPM, MONO-DIRECTIONAL, WHITE LENS	UNIT	170		170															
149	610018M	RPM, MONO-DIRECTIONAL, AMBER LENS	UNIT	40		40															
150	610021M	RPM, BI-DIRECTIONAL, AMBER LENS	UNIT	10		10															
151	610024M	REMOVAL OF RPM	UNIT																		
152	610036M	REMOVAL OF TRAFFIC STRIPES	L.F.	26,500		26,500															
153	610039M	REMOVAL OF TRAFFIC MARKINGS	S.F.	9,800		9,800															
154	612003P	REGULATORY AND WARNING SIGN	S.F.	804		804															
155	612006P	GUIDE SIGN, TYPE GA, STEEL "U" POST SUPPORTS	S.F.	156	156			TSS-1	24	TSS-2	78	TSS-3	24	TSS-5	30						
156	612034M	RELOCATE SPECIALIZED SIGN	UNIT	1	1			C-3	1												
157	651054P	6" DUCTILE IRON WATER PIPE, CLASS 52	L.F.	249	249			DU-2	147	DU-5	102										
158	651057P	8" DUCTILE IRON WATER PIPE, CLASS 52	L.F.	50	50			DU-2	50												
159	651063P	12" DUCTILE IRON WATER PIPE, CLASS 52	L.F.	70	70			DU-5	70												
160	651071P	20" DUCTILE IRON WATER PIPE, CLASS 52	L.F.	50	50			DU-2	50												
161	651243M	WATER SERVICE CONNECTION	UNIT	4		4															
162	651249M	RELOCATE FIRE HYDRANT	UNIT	2	2			DU-1	1	DU-2	1										
163	651255M	RESET WATER VALVE BOX	UNIT	17	17			DU-1	5	DU-2	6	DU-4	2	DU-5	4						
164	651258M	WATER AS-BUILT PLAN	L.S.	L.S.																	
165	652236P	8" POLYVINYL CHLORIDE SEWER PIPE	L.F.	564	564			DU-2	197	DU-5	367										
166	652417M	SANITARY SEWER SERVICE CONNECTION	UNIT	4		4															
167	652420M	MANHOLE, SANITARY SEWER	UNIT	4	4			DU-2	1	DU-5	3										
168	652421M	MANHOLE, DOGHOUSE, SANITARY SEWER, 4' DIAMETER	UNIT	2	2			DU-2	1	DU-5	1										
169	652426M	RECONSTRUCTED MANHOLE, SANITARY SEWER, USING EXISTING	UNIT	2	2			DU-2	2												
170	652432M	RESET MANHOLE, SANITARY SEWER, USING EXISTING CASTING	UNIT	10	10			DU-1	1	DU-2	4	DU-4	1	DU-5	4						
171	652438M	VIDEO INSPECTION OF SEWER	L.F.	564		564															
172	652441M	SEWER AS-BUILT PLAN	L.S.	L.S.																	
173	653006P	4" GAS MAIN	L.F.	676	676			DU-1	359	DU-2	317										
174	653009P	6" GAS MAIN	L.F.	1,095	1,095			DU-1	57	DU-2	842	DU-5	196								
175	653015M	GAS MAIN, TIE-IN ASSISTANCE	M.H.	40	40			DU-1	16	DU-2	16	DU-5	8								
176	653081M	GAS SERVICE CONNECTION	UNIT	7		7															
177	653084M	RESET GAS VALVE BOX	UNIT	5		5															
178	653087P	GAS AS-BUILT PLAN	L.S.	L.S.																	
179	701015P	2" RIGID METALLIC CONDUIT	L.F.	479	479			E-1	162	ITS-3	123	ITS-4	194								
180	701021P	3" RIGID METALLIC CONDUIT	L.F.	864	864			E-1	823	E-2	41										
181	701027P	2" RIGID NONMETALLIC CONDUIT	L.F.	268	268			ITS-3	204	ITS-4	64										
182	701029P	RIGID NONMETALLIC MULTIDUCT CONDUIT	L.F.	194	194			ITS-3	142	ITS-4	52										
183	701030P	3" RIGID NONMETALLIC CONDUIT	L.F.	41	41			E-2	41												
184	701051P	3 - 1 1/4" FLEXIBLE NONMETALLIC CONDUIT	L.F.	270	270			E-1	162	ITS-3	270										
185	701095M	JUNCTION BOX, PVC PLASTIC	UNIT	2	2			E-2	2												
186	701102M	18" X 36" JUNCTION BOX	UNIT	14	14			E-1	7	ITS-3	5	ITS-4	2								
187	701123M	FOUNDATION, TYPE SFT	UNIT	3	3			E-1	3												
188	701126M	FOUNDATION, TYPE MCF	UNIT	1	1			ITS-3	1												

STATE	FEDERAL PROJECT NO.
N.J.	

PARSONS BRINCKERHOFF CADD DATA
OPERATOR HeNa | QUEUE \\Ampr\prt01\PRIPL03_BW_IP
PLOT DATE 11-MAR-2013 09:05
PENTABLE ehx.tbl
DESIGN FILE T:\20063\ed02.dgn

NEW JERSEY DEPARTMENT OF TRANSPORTATION

ESTIMATE-DISTRIBUTION OF QUANTITIES

PROJECT : ROUTE U.S. 46 LITTLE FERRY CIRCLE
CONTRACT NO. 069950373

PARSONS BRINCKERHOFF, INC.
CERTIFICATE OF AUTHORIZATION NO. 24GA28029800
MICHAEL D. HELMLINGER
N.J. PROFESSIONAL ENGINEER NO. 24GE03812100

EDQ-2 / EDQ-3

STATE	FEDERAL PROJECT NO.
N.J.	

SEQ. NO.	ITEM NO.	DESCRIPTION	UNIT	CONTRACT QUANTITY	PLAN SHEET TOTALS	IF AND WHERE DIRECTED	AS - BUILT QUANTITY	DISTRIBUTION: PLAN SHEET QUANTITY							
189	701132M	FOUNDATION, TYPE P-MC	UNIT	1	1			E-1	1						
190	701138M	FOUNDATION, TYPE STF	UNIT	3	3			E-1	3						
191	701153M	FOUNDATION, TYPE IM	UNIT	1	1			ITS-3	1						
192	701159M	FOUNDATION, TYPE IM-MC	UNIT	2	2			ITS-3	1	E-1	1				
193	701171M	METER CABINET, TYPE TL	UNIT	1	1			E-1	1						
194	701177M	METER CABINET, TYPE IM-MC	UNIT	1	1			E-1	1						
195	701192P	GROUND WIRE, NO. 8 AWG	L.F.	1,537	1,537			E-1	985	E-2	282	ITS-3	59	ITS-4	211
196	701198P	MULTIPLE LIGHTING WIRE, NO. 6 AWG	L.F.	404	404			ITS-3	177	ITS-4	227				
197	701201P	MULTIPLE LIGHTING WIRE, NO. 8 AWG	L.F.	1,965	1,965			E-1	1,965						
198	701210P	SERVICE WIRE, NO. 2 AWG	L.F.	255	255			ITS-3	255						
199	701213P	SERVICE WIRE, NO. 6 AWG	L.F.	220	220			E-1	220						
200	702009M	CONTROLLER, 8 PHASE	UNIT	1	1			E-1	1						
201	702012M	TRAFFIC SIGNAL STANDARD, ALUMINUM	UNIT	2	2			E-1	2						
202	702015M	TRAFFIC SIGNAL STANDARD, STEEL	UNIT	4	4			E-1	4						
203	702021M	TRAFFIC SIGNAL MAST ARM, ALUMINUM	UNIT	2	2			E-1	2						
204	702024M	TRAFFIC SIGNAL MAST ARM, STEEL	UNIT	4	4			E-1	4						
205	702027P	TRAFFIC SIGNAL CABLE, 2 CONDUCTOR	L.F.	670	670			E-1	525	E-2	145				
206	702030P	TRAFFIC SIGNAL CABLE, 5 CONDUCTOR	L.F.	2,790	2,790			E-1	1,825	E-2	965				
207	702032P	TRAFFIC SIGNAL CABLE, 7 CONDUCTOR	L.F.	380	380			E-2	380						
208	702033P	TRAFFIC SIGNAL CABLE, 10 CONDUCTOR	L.F.	1,950	1,950			E-1	1,950						
209	702036M	TRAFFIC SIGNAL HEAD	UNIT	20	20			E-1	20						
210	702039M	PEDESTRIAN SIGNAL HEAD	UNIT	12	12			E-1	6	E-2	6				
211	702042M	PUSH BUTTON	UNIT	3	3			E-1	2	E-2	1				
212	702045M	IMAGE DETECTOR	UNIT	6	6			E-1	4	E-2	2				
213	702051P	PPB & LOOP LEAD - IN WIRE (NOTE 3)	L.F.	145	145			E-2	145						
214	702054M	TEMPORARY TRAFFIC SIGNAL LOCATION NO. 1	L.S.	L.S.											
215	702060M	CONTROLLER TURN-ON	UNIT	1	1			E-1	1						
216	702078M	TRAFFIC SIGNAL ASSEMBLY, TYPE 30MA-2	UNIT	2	2			E-2	2						
217	702109M	TRAFFIC SIGNAL ASSEMBLY, CLAMP MOUNTED	UNIT	1	1			E-2	1						
218	702110M	BC TRAFF SIG POLE FOUNDATION, 12" DIA	UNIT	2	2			E-2	2						
219	703012M	LIGHTING MAST ARM, ALUMINUM	UNIT	6	6			E-1	6						
220	703018M	LUMINAIRE	UNIT	6	6			E-1	6						
221	703033P	TEMPORARY HIGHWAY LIGHTING SYSTEM	L.S.	L.S.											
222	704003M	JUNCTION BOX ITS TYPE A	UNIT	3	3			ITS-3	3						
223	704009M	JUNCTION BOX ITS TYPE C	UNIT	1	1			ITS-3	1						
224	704011M	METER CABINET, TYPE ITS	UNIT	1	1			ITS-3	1						
225	704014M	FOUNDATION, ITS TYPE MC	UNIT	1	1			ITS-3	1						
226	704029M	COMMUNICATION HUB MODIFICATIONS, LOCATION RT. 80 FIELD TERMINAL	UNIT	1	1			ITS-5	1						
227	704035M	FOUNDATION CSS	UNIT	1	1			ITS-3	1						
228	704036M	FOUNDATION CSS TYPE A	UNIT	1	1			ITS-3	1						
229	704048M	CAMERA STANDARD TYPE A	UNIT	1	1			ITS-3	1						
230	704060M	CAMERA	UNIT	1	1			ITS-3	1						
231	704063M	CONTROLLER, CAMERA	UNIT	1	1			ITS-3	1						
232	704075P	FIBER OPTIC CABLE TYPE D	L.F.	731	731			ITS-3	423	ITS-4	308				
233	704081P	FIBER OPTIC CABLE TYPE F	L.F.	204	204			ITS-3	108	ITS-4	96				
234	704086P	INSTALL FIBER OPTIC CABLE	L.F.	4,102	4,102			ITS-2	1,760	ITS-3	1,734	ITS-4	608		
235	804006P	TOPSOILING, 4" THICK	S.Y.	5,071	5,071			C-3	2,044	C-7	1,117	X-17	1,910		
236	804015P	BORROW TOPSOIL	C.Y.	316	316			X-17	316						
237	804020P	PLANTING SOIL, 36" THICK	S.Y.	896	896			C-3	896						
238	806006P	FERTILIZING AND SEEDING, TYPE A-3	S.Y.	5,071	5,071			C-3	2,044	C-7	1,117	X-17	1,910		
239	806018P	FERTILIZING AND SEEDING, TYPE F	S.Y.	507		507									
240	807009M	TOPOSOIL STABILIZATION, TYPE 3 MAT	S.Y.	268	268			EP-3	229	EP-4	39				
241	807021M	WASHED RIVERJACK STONE WITH WEED BARRIER	S.Y.	218	218			L-2	218						
242	809003M	STRAW MULCHING	S.Y.	5,071	5,071			C-3	2,044	C-7	1,117	X-17	1,910		
243	810003M	MOWING	ACRE	1		1									
244	811004M	LARGE DECIDUOUS TREE, 2 1/2" - 3" CALIPER, B&B	UNIT	6	6			L-2	6						
245	811024M	SMALL DECIDUOUS TREE, 2 - 2 1/2" CALIPER, B&B	UNIT	13	13			L-2	13						
246	811039M	EVERGREEN TREE, 6 - 7' HIGH, B&B	UNIT	8	8			L-2	8						
247	811078M	EVERGREEN SHRUB, 18-24" HIGH, #3 CONTAINER	UNIT	64	64			L-2	64						
248	811093M	EVERGREEN SHRUB, 18-24" SPREAD, #3 CONTAINER	UNIT	38	38			L-2	38						
249	811111M	PERENNIAL, #1 CONTAINER	UNIT	132	132			L-2	132						
250	811123M	BULB	UNIT	14,500	14,500			L-2	14,500						
251	811138M	PLANT ESTABLISHMENT PERIOD	L.S.	L.S.											
252	811150M	LANDSCAPE ACCENT WALL	S.F.	140	140			C-2	140						
253	811171P	RESET IRRIGATION SYSTEM	UNIT	1	1			DU-1	1						

PARSONS BRINCKERHOFF CADD DATA	
OPERATOR	HeNa
QUEUE	\\Amprlprt01\PRIPL03_BW_IP
PLOT DATE	11-MAR-2013 09:05
PENTABLE	ehx.tbl
DESIGN FILE	T:\20063\ed03.dgn

NEW JERSEY DEPARTMENT OF TRANSPORTATION

ESTIMATE-DISTRIBUTION OF QUANTITIES

PROJECT : ROUTE U.S. 46 LITTLE FERRY CIRCLE
CONTRACT NO. 069950373

PARSONS BRINCKERHOFF, INC.
CERTIFICATE OF AUTHORIZATION NO. 24GA28029800
MICHAEL D. HELMLINGER
N.J. PROFESSIONAL ENGINEER NO. 24GE03812100

EDQ-3 / EDQ-3

STATE	FEDERAL PROJECT NO.
N.J.	

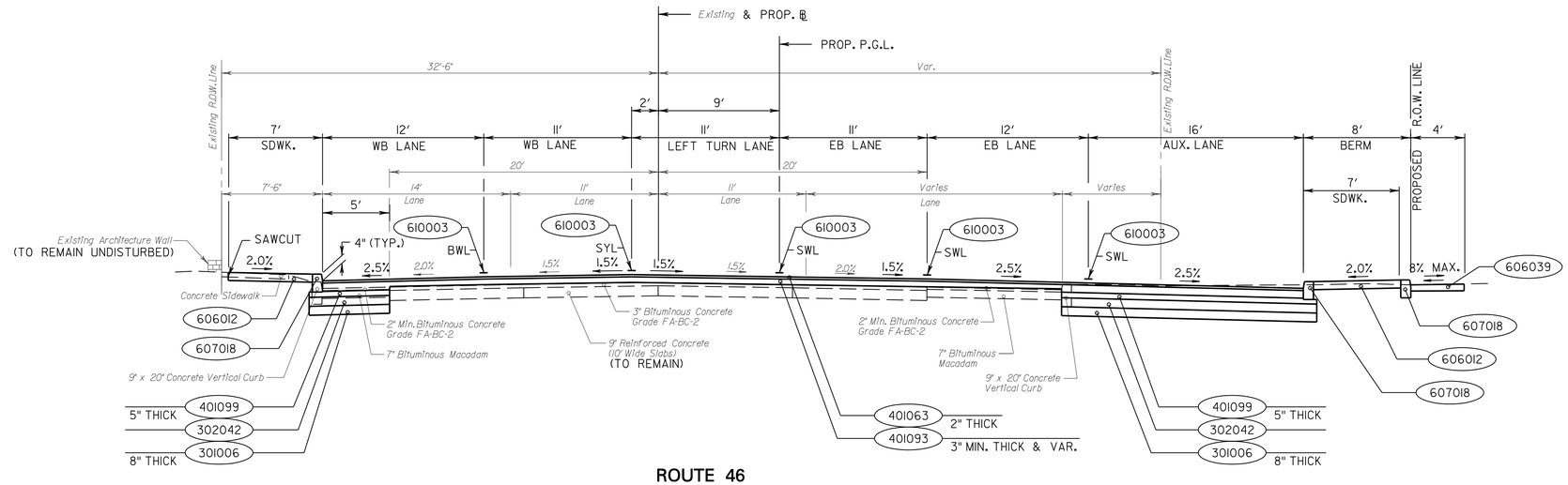

ROUTE 46

STA. 91±24 TO STA. 93±50

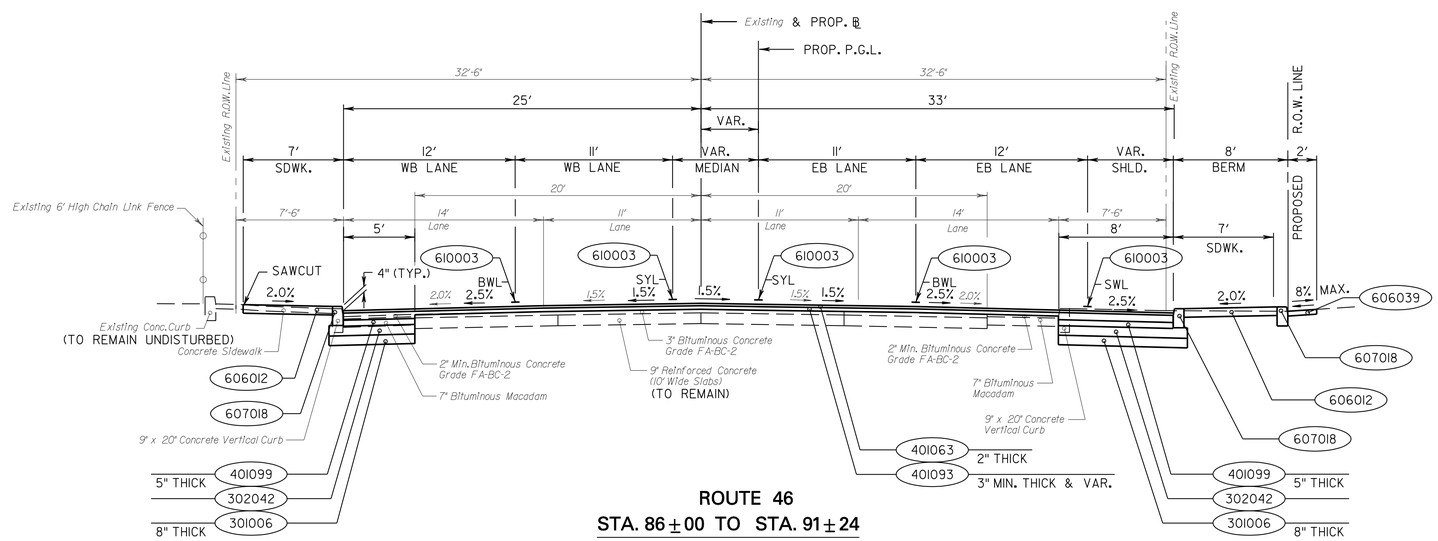

ROUTE 46

STA. 86±00 TO STA. 91±24

PROPOSED MATERIALS

ITEM NO.	DESCRIPTION
301006P	SUBBASE
302042P	DENSE-GRADED AGGREGATE BASE COURSE, 8" THICK
401063M	HOT MIX ASPHALT 12.5H76 SURFACE COURSE
401093M	HOT MIX ASPHALT 19H76 INTERMEDIATE COURSE
401099M	HOT MIX ASPHALT 25M64 BASE COURSE
606012P	CONCRETE SIDEWALK, 4" THICK
606039P	HOT MIX ASPHALT DRIVEWAY, 6" THICK
607018P	9" X 16" CONCRETE VERTICAL CURB
610003M	TRAFFIC STRIPES, LONG LIFE, EPOXY RESIN 4"

* WHERE SHOWN ON PLANS

STRIPING LEGEND

BWL - BROKEN WHITE LINE, 4"
SWL - SOLID WHITE LINE, 4"
SYL - SOLID YELLOW LINE, 4"
DYL - DOUBLE SOLID YELLOW LINE, 4"

SCALE IN FEET

5' 0 5' 10'

ALL DIMENSIONS IN FEET UNLESS OTHERWISE NOTED

TS-1 / TS-4

NEW JERSEY DEPARTMENT OF TRANSPORTATION

TYPICAL SECTIONS

ROUTE U.S. 46 LITTLE FERRY CIRCLE

CONTRACT NO. 069950373

PARSONS BRINCKERHOFF, INC.
CERTIFICATION OF AUTHORIZATION NO. 24GA28029800

MICHAEL D. HELMLINGER
N.J. PROFESSIONAL ENGINEER NO. 24GE03812100

8

PARSONS BRINCKERHOFF CADD DATA	
OPERATOR	Detore
QUEUE	\\amprlpr-t01\PRIPL03.BW_IP
PLOT DATE	08-MAR-2013 08:55
PENTABLE	ehx.tbl
DESIGN FILE	T:\20063\ts01.dgn

STATE	FEDERAL PROJECT NO.
N.J.	

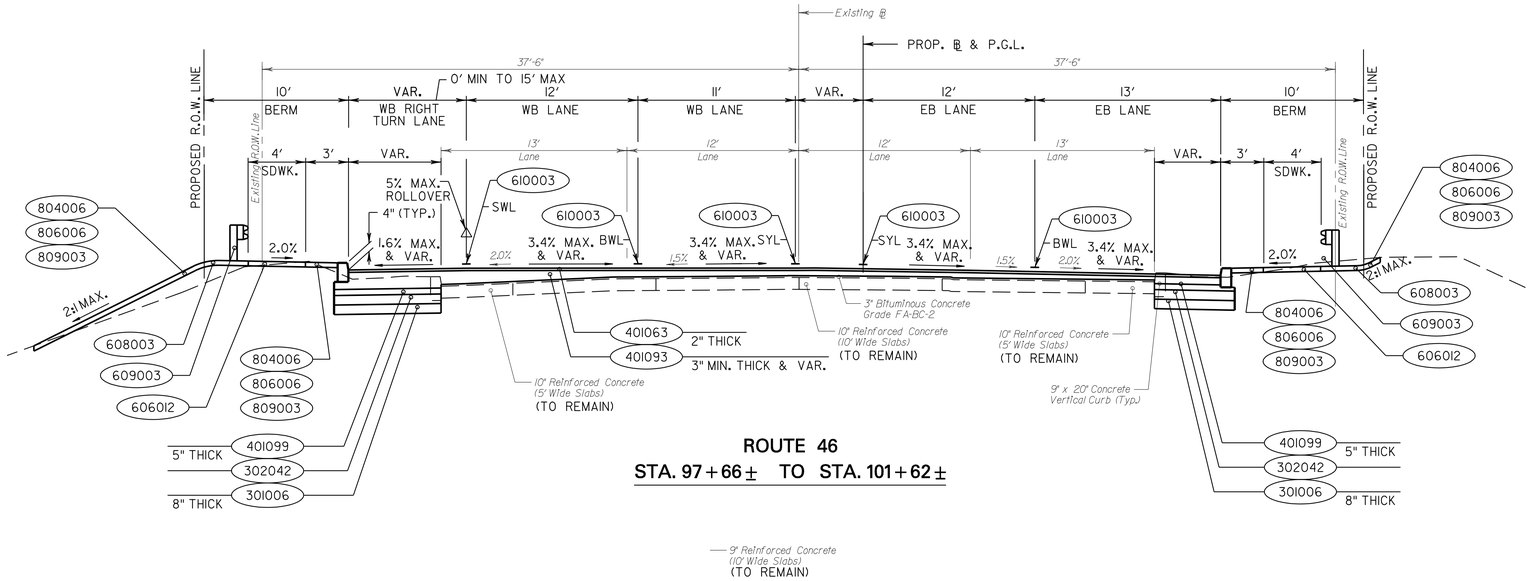

ROUTE 46

STA. 97+66± TO STA. 101+62±

9' Reinforced Concrete (10' Wide Slabs) (TO REMAIN)

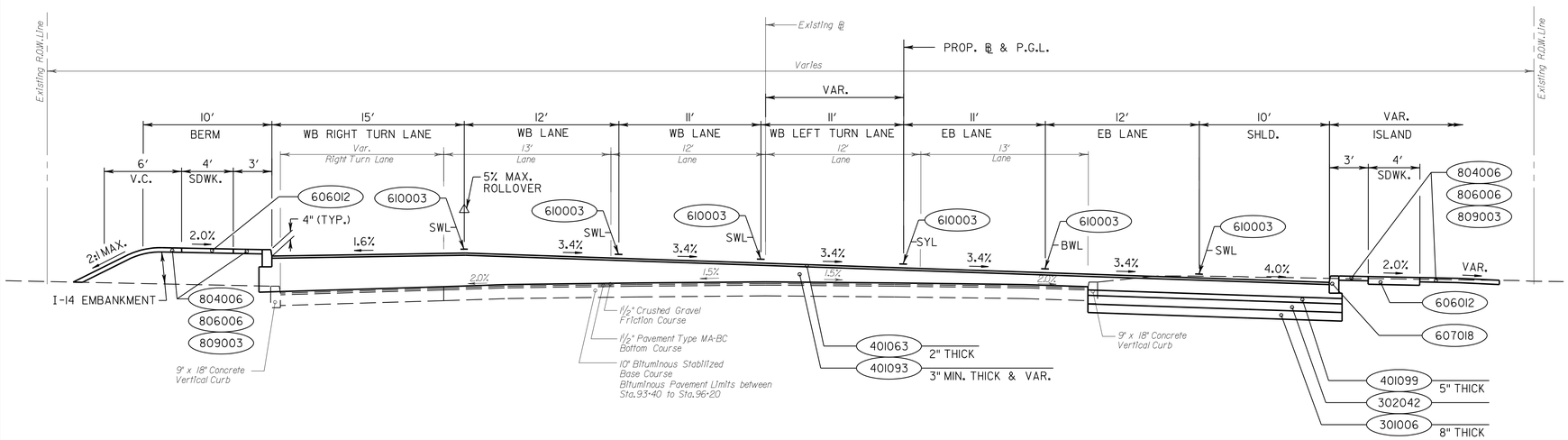

ROUTE 46

STA. 95+58± TO STA. 96+80±

PROPOSED MATERIALS

ITEM NO.	DESCRIPTION
301006P	SUBBASE
302042P	DENSE-GRADED AGGREGATE BASE COURSE, 8" THICK
401063M	HOT MIX ASPHALT 12.5H76 SURFACE COURSE
401093M	HOT MIX ASPHALT 19H76 INTERMEDIATE COURSE
401099M	HOT MIX ASPHALT 25M64 BASE COURSE
606012P	CONCRETE SIDEWALK, 4" THICK
607018P	9" X 16" CONCRETE VERTICAL CURB
608003P	NONVEGETATIVE SURFACE, HOT MIX ASPHALT
609003M	BEAM GUIDE RAIL
610003M	TRAFFIC STRIPES, LONG LIFE, EPOXY RESIN 4"
804006P	TOPSOILING, 4" THICK
806006P	FERTILIZING AND SEEDING, TYPE A-3
809003M	STRAW MULCHING

SCALE IN FEET

5' 0 5' 10'

ALL DIMENSIONS IN FEET UNLESS OTHERWISE NOTED

TS-2 / TS-4

NEW JERSEY DEPARTMENT OF TRANSPORTATION

TYPICAL SECTIONS

ROUTE U.S. 46 LITTLE FERRY CIRCLE

CONTRACT NO. 069950373

PARSONS BRINCKERHOFF, INC.
CERTIFICATION OF AUTHORIZATION NO. 24GA28029800

MICHAEL D. HELMLINGER
N.J. PROFESSIONAL ENGINEER NO. 24GE03812100

9

PARSONS BRINCKERHOFF CADD DATA

OPERATOR	Detore	QUEUE	\\ampr1pr-t01\PRIPL03.BWL.IP
PLOT DATE	08-MAR-2013 08:55		
PENTABLE	ehx.tbl		
DESIGN FILE	T:\20063\ts02.dgn		

STATE	FEDERAL PROJECT NO.
N.J.	

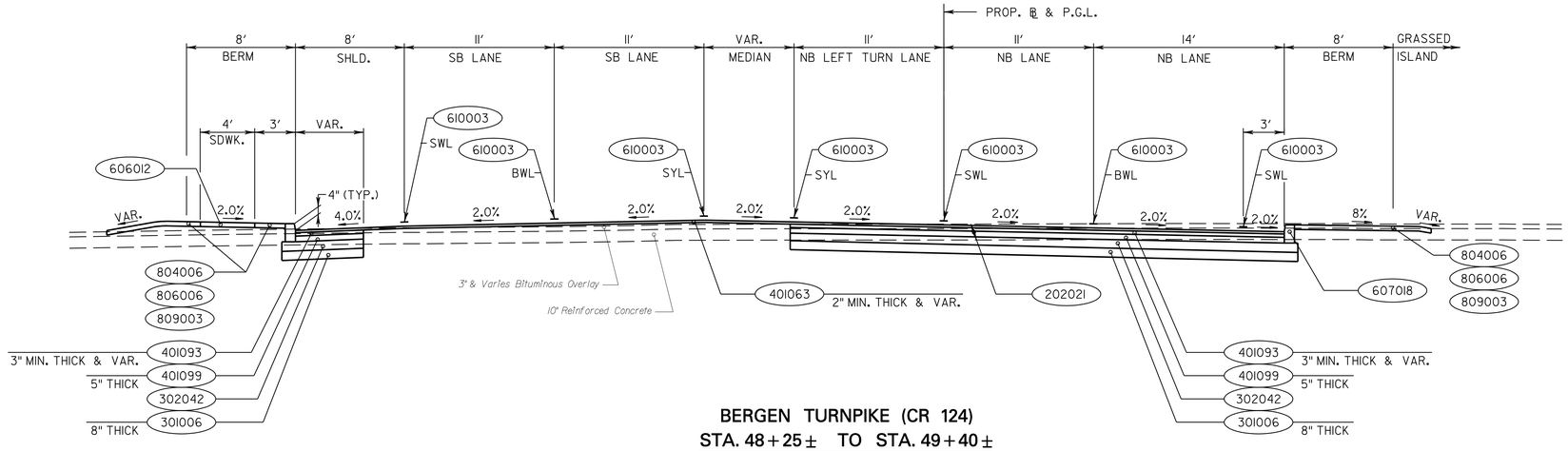

BERGEN TURNPIKE (CR 124)
STA. 48+25± TO STA. 49+40±

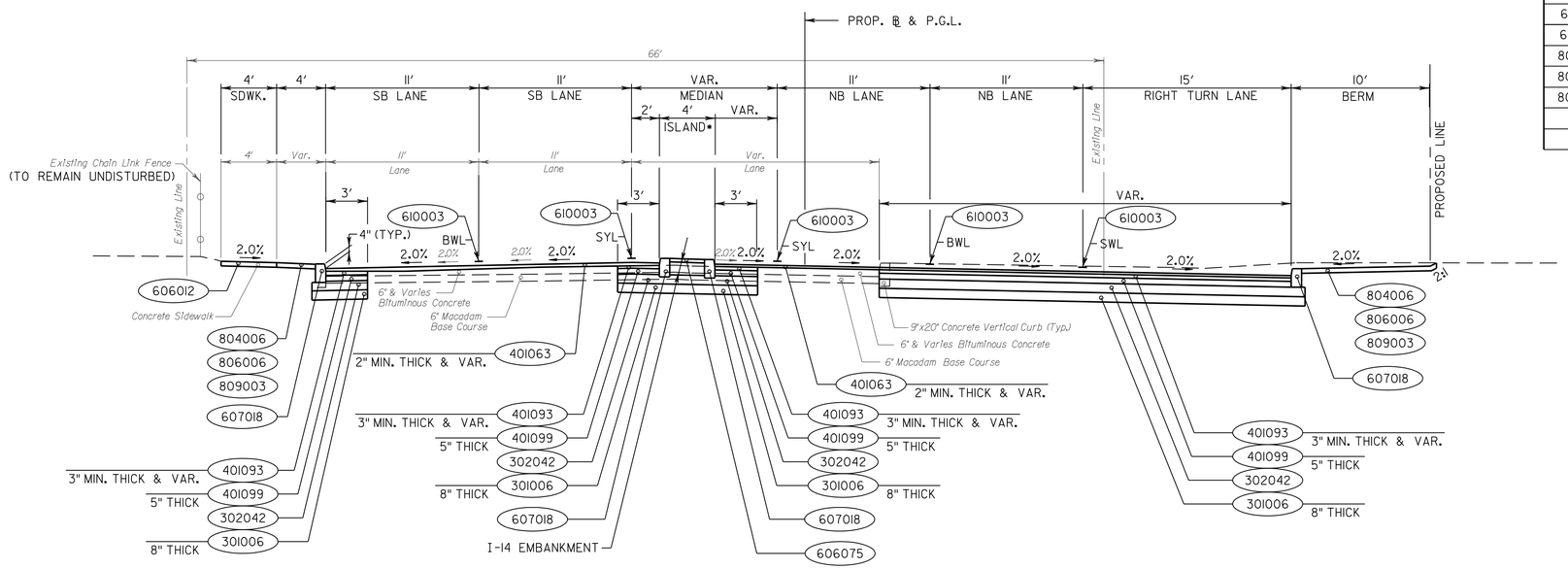

BERGEN TURNPIKE (CR 124)
STA. 47+10± TO STA. 48+00±

PROPOSED MATERIALS

ITEM NO.	DESCRIPTION
202021P	REMOVAL OF PAVEMENT
301006P	SUBBASE
302042P	DENSE-GRADED AGGREGATE BASE COURSE, 8" THICK
401063M	HOT MIX ASPHALT 12.5H76 SURFACE COURSE
401093M	HOT MIX ASPHALT 19H76 INTERMEDIATE COURSE
401099M	HOT MIX ASPHALT 25M64 BASE COURSE
606012P	CONCRETE SIDEWALK, 4" THICK
606075P	CONCRETE ISLAND, 4" THICK
607018P	9" X 16" CONCRETE VERTICAL CURB
610003M	TRAFFIC STRIPES, LONG LIFE, EPOXY RESIN 4"
804006P	TOPSOILING, 4" THICK
806006P	FERTILIZING AND SEEDING, TYPE A-3
809003M	STRAW MULCHING

* WHERE SHOWN ON PLANS

SCALE IN FEET
5' 0 5' 10'
ALL DIMENSIONS IN FEET UNLESS OTHERWISE NOTED

TS-3 / TS-4

NEW JERSEY DEPARTMENT OF TRANSPORTATION

TYPICAL SECTIONS

ROUTE U.S. 46 LITTLE FERRY CIRCLE

CONTRACT NO. 069950373

PARSONS BRINCKERHOFF, INC.
CERTIFICATION OF AUTHORIZATION NO. 24GA28029800

MICHAEL D. HELMLINGER
N.J. PROFESSIONAL ENGINEER NO. 24GE03812100

10

PARSONS BRINCKERHOFF CADD DATA

OPERATOR	Detore	QUEUE	\\amprlpr+01\PRIPL03_BW.IP
PLOT DATE	08-MAR-2013 08:55		
PENTABLE	ehx.tbl		
DESIGN FILE	T:\20063\ts03.dgn		

STATE	FEDERAL PROJECT NO.
N.J.	

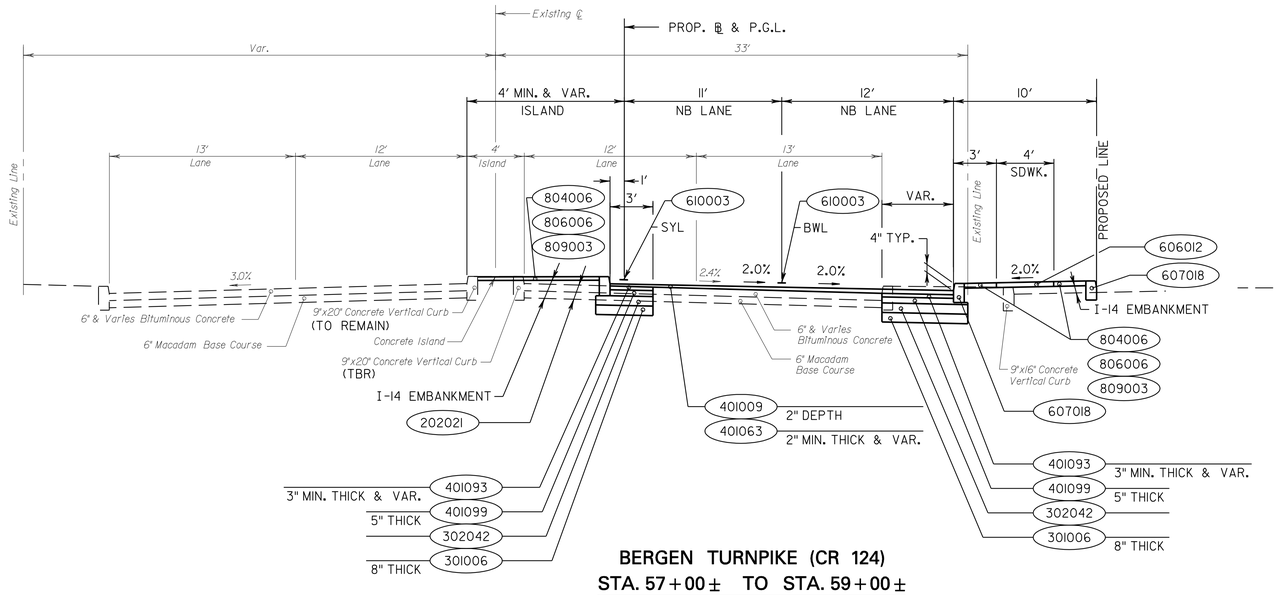

BERGEN TURNPIKE (CR 124)
STA. 57+00± TO STA. 59+00±

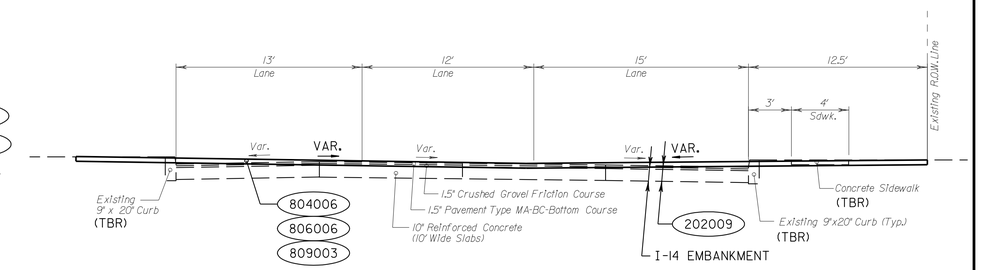

TRAFFIC CIRCLE AT BERGEN TURNPIKE APPROACHES

PROPOSED MATERIALS	
ITEM NO.	DESCRIPTION
202009P	EXCAVATION, UNCLASSIFIED
202021P	REMOVAL OF PAVEMENT
301006P	SUBBASE
302042P	DENSE-GRADED AGGREGATE BASE COURSE, 8" THICK
401009P	HMA MILLING, 3" OR LESS
401063M	HOT MIX ASPHALT 12.5H76 SURFACE COURSE
401093M	HOT MIX ASPHALT 19H76 INTERMEDIATE COURSE
401099M	HOT MIX ASPHALT 25M64 BASE COURSE
606012P	CONCRETE SIDEWALK, 4" THICK
606039P	HOT MIX ASPHALT DRIVEWAY, 6" THICK
607018P	9" X 16" CONCRETE VERTICAL CURB
610003M	TRAFFIC STRIPES, LONG LIFE, EPOXY RESIN 4"
804006P	TOPSOILING, 4" THICK
806006P	FERTILIZING AND SEEDING, TYPE A-3
809003M	STRAW MULCHING

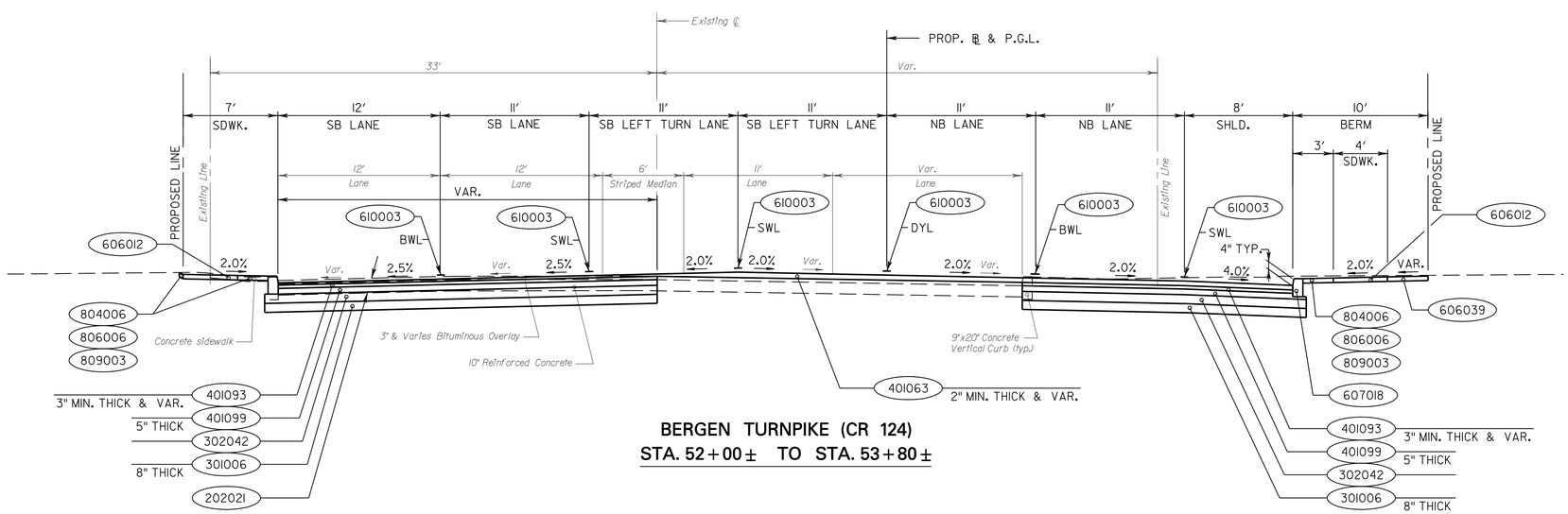

BERGEN TURNPIKE (CR 124)
STA. 52+00± TO STA. 53+80±

SCALE IN FEET
5' 0 5' 10'
ALL DIMENSIONS IN FEET UNLESS OTHERWISE NOTED

TS-4
TS-4

NEW JERSEY DEPARTMENT OF TRANSPORTATION

TYPICAL SECTIONS

ROUTE U.S. 46 LITTLE FERRY CIRCLE

CONTRACT NO. 069950373

PARSONS BRINCKERHOFF, INC.
CERTIFICATION OF AUTHORIZATION NO. 24GA28029800

MICHAEL D. HELMLINGER
N.J. PROFESSIONAL ENGINEER NO. 24GE03812100

II

PARSONS BRINCKERHOFF CADD DATA

OPERATOR	Detore	QUEUE
PLOT DATE	08-MAR-2013 08:55	
PENTABLE	ehx.tbl	
DESIGN FILE	T:\20063\ts04.dgn	

\\amprlpr+01\PRIPLO3.BW.IP

STATE	FEDERAL PROJECT NO.
N.J.	

BOROUGH OF LITTLE FERRY

COUNTY OF BERGEN

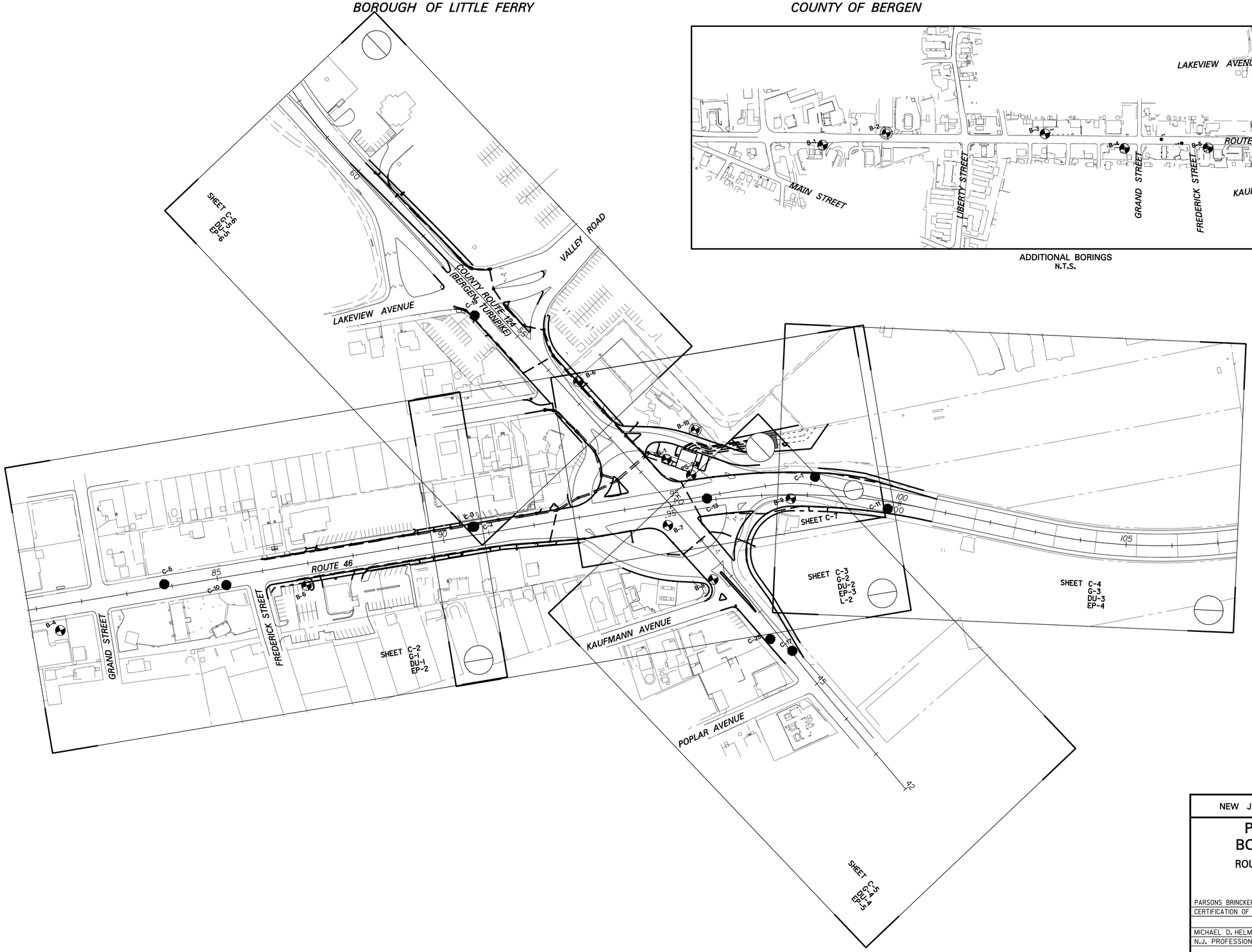

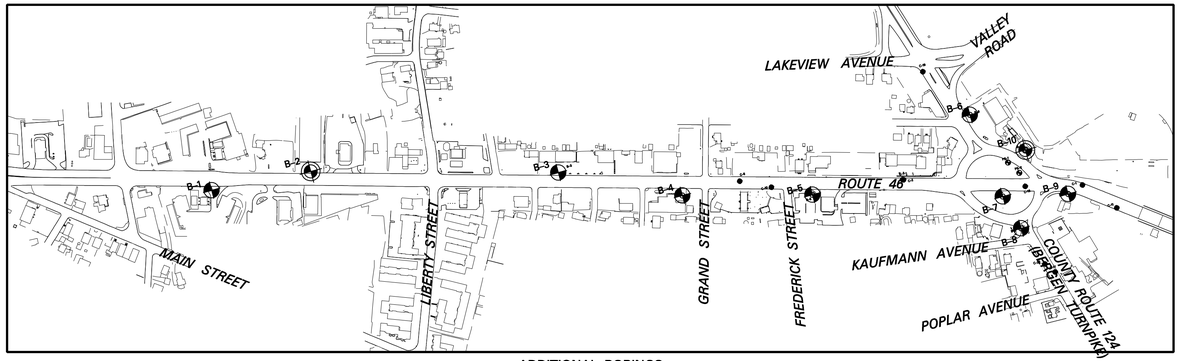

ADDITIONAL BORINGS
N.T.S.

LEGEND

SHEET C = CONSTRUCTION PLAN

SHEET G = GRADES

SHEET DU = DRAINAGE AND UTILITY PLANS

SHEET EP = ENVIRONMENTAL & SOIL EROSION & SEDIMENT CONTROL PLANS

SHEET L = LANDSCAPE PLANS

BORING

BORING WITH WATER OBSERVATION WELL

PAVEMENT CORE

SCALE IN FEET

100' 50' 0 100' 200'

PSI-1

PSI-1

NEW JERSEY DEPARTMENT OF TRANSPORTATION

PLAN SHEET INDEX & BORING LOCATION PLAN

ROUTE U.S. 46 LITTLE FERRY CIRCLE

CONTRACT NO. 069950373

PARSONS BRINCKERHOFF, INC.
CERTIFICATION OF AUTHORIZATION NO. 24GA28029800

MICHAEL D. HELMLINGER
N.J. PROFESSIONAL ENGINEER NO. 24GE03812100

12

PARSONS BRINCKERHOFF CADD DATA

OPERATOR	HeNa	QUEUE	\\Ampr1pr+01\PRIP\L03_BW.IP
PLOT DATE	06-MAR-2013 15:23		
PENTABLE	ehx.tbl		
DESIGN FILE	T:\20063\in01.dgn		

STATE	FEDERAL PROJECT NO.
N.J.	

NEW JERSEY DEPARTMENT OF TRANSPORTATION STANDARD LEGEND

Linear Features

Existing	PROPOSED	
W	W	Water Main (Size)
G	G	Gas Main (Size)
T	T	Telephone Conduit
E	E	Electric Conduit (Highway or Utility)
CTV	CTV	Cable TV
FO	FO	Fiber Optic
(Size & Type) (Over 30" - Draw to Size)	(SIZE & TYPE) (OVER 30" - DRAW TO SIZE)	Sanitary Sewers or Storm Drains
		Pavements (Concrete or Bituminous)
		Shoulders
		Curbs
(F) (C)	(C) (F)	Slopes (Cut & Fill)
5+00 ℄	℄ 10+00	Base Line
		Twp., City, County Lines
Existing R.O.W. Line	PROPOSED R.O.W. LINE	Right of Way Lines (Access Permitted)
Existing R.O.W. & No Access Line	PROP. R.O.W. & NO ACCESS LINE	Right of Way Lines (No Access)
		Easements
℄		Property Line
		Fence (Size & Type)
		Reset Fence
		Beam Guide Rail
		Reset Beam Guide Rail
		Noise Walls
		Wetland Limit Line
		Silt Fence
Ditch	DITCH	Ditches
		Railroad Tracks
		Tree Line

Topographical Features

Existing	PROPOSED	
		Inlets (Label Type)
		Over Size Inlets (Label Type)
"ES"	"ES"	Inlets (Type ES)
		Manholes (Label Type or Utility)
		Reset (Inlets or Manholes)
		Reconstructed (Inlets or Manholes)
		Cast Iron Extension (Frame or Ring) (Inlet or Manhole)
		New Manhole Casting, Square Frame, Circular Cover
		R.C. End Section or C.M. Headwall
		Headwalls
		Headwalls & Aprons
W		Water Gate Valves
		Reset Water Gate Valves
G		Gas Gate Valves
		Reset Gas Gate Valves
Hyd.		Hydrants
		Reset Hydrants
		Utility Pole (Type & Number)
	TEMP	Temporary Utility Pole
		Traffic Signal
J.B.	J.B.	Junction Box
F	F	Fiber Optic Junction Box
J.B. & Light		Junction Box Foundation
		Signs
		Vertical Panels

Topographical Features

Existing	PROPOSED	
		Guide Rail Slotted Rail Terminals
		Beam Guide Rail Anchorages
		Guide Rail Extruder Terminal
Mon.		Monuments
		ROW Monument (ROW Control Points)
	TEST PIT NUMBER	Test Pit
Boring Number	BORING NUMBER	Borings (Boring Number)
		Decidous Tree (Size, Kind)
		Evergreens
		Bush
		Hedges
		Swamp

Double Reference Codes

EDQ - EST. & DIST. OF QTY - ROADWAY
TS - TYPICAL SECTIONS
PSI - PLAN SHEET INDEX
C - CONSTRUCTION PLANS
EP - ENVIRONMENTAL & SOIL EROSION & SEDIMENT CONTROL PLANS
DTL - CONSTRUCTION DETAILS
DU - DRAINAGE AND UTILITY PLANS
P - PROFILES
T - TIES
G - GRADES
TC - TRAFFIC CONTROL AND STAGING PLANS
E - ELECTRICAL PLANS
TSP - TRAFFIC SIGNAL PLANS
ITS - INTELLIGENT TRANSPORT SYSTEM PLANS
L - LANDSCAPE PLANS
TSS - TRAFFIC SIGNING AND STRIPING PLANS
STD - SIGN TEXT DETAILS
MS - METHOD OF CROSS SECTIONS
X - CROSS SECTIONS

Miscellaneous Symbols

Items With No Alternate

Alternate Items OR

For Alternate Pipe Items
(C) = Concrete
(M) = Metal

Full Depth Pavement Reconstruction

Overlay

Milling and Overlay

Rip Rap

Building to be Removed & Paid for Under Clearing Site

PARCEL — Demolition No. & Parcel No. of Building to be Demolished

PROFILE — % — LEVEL LINE — %

High Point

Low Point

B.M. — Bench Mark

Proposed Bridge

Bridge Appoach Slabs

ABBREVIATIONS USED IN THIS CONTRACT

AH., BK.	AHEAD, BACK
ADC	ADVANCE DEMOLITION CONTRACT BY OTHERS
℄, B.L.	BASELINE
B.M.	BENCH MARK
BIT., BITUM.	BITUMINOUS
BLDG.	BUILDING
℄, C.L.	CENTERLINE
C.I.P.	CAST IRON PIPE
C.L.F.	CHAIN LINK FENCE
C.M.P.	CORRUGATED METAL PIPE
C.R.	COUNTY ROUTE
C.T.	CURB TRANSITION
CONC.	CONCRETE
CULV.	CULVERT
D, DIA.	DIAMETER
D.C.	DEPRESSED CURB
DE	DITCH EXCAVATION
DH	DRILL HOLE
DWY	DRIVEWAY
E.B., W.B., N.B., S.B.	EASTBOUND, WESTBOUND NORTHBOUND, SOUTHBOUND
EL., ELEV.	ELEVATION
EXIST.	EXISTING
GR.	GRATE
H.C.	HANDICAP RAMP/CURB RAMP
HERCCP	HORIZONTAL REINFORCED ELLIPTICAL CONCRETE CULVERT PIPE
HT.	HEIGHT
H.W.	HEADWALL
HYD.	HYDRANT
INV.	INVERT
IP	IRON PIN
J.B.	JUNCTION BOX
LT., RT.	LEFT, RIGHT
L.O.P.	LIMIT OF PAVING
L.O.M.	LIMIT OF MILLING
M.B.	MAILBOX
M.P.	MILE POST
MAX.	MAXIMUM
M.E.C.	MEET EXISTING CURB
MIN.	MINIMUM
NO.	NUMBER
N.T.S.	NOT TO SCALE
PAV'T.	PAVEMENT
PERF.	PERFORATED
P.G.L.	PROFILE GRADE LINE
℄, P.L.	PROPERTY LINE, PROFILE LINE
PK	PARKER KAYLON MASONRY NAIL
POC, P.O.C.	POINT ON CURVE
POL, P.O.L.	POINT ON LINE
POT, P.O.T.	POINT ON TANGENT
PRC, P.R.C.	POINT OF REVERSE CURVE
PROP.	PROPOSED
PT, P.T.	POINT OF TANGENCY
PVC, P.V.C.	POLYVINYL CHLORIDE PIPE, POINT OF VERTICAL CURVATURE
PVI, P.V.I.	POINT OF VERTICAL INTERSECTION
PVT, P.V.T.	POINT OF VERTICAL TANGENCY, PAVEMENT
R	RADIUS
RCCP, R.C.C.P.	REINFORCED CONCRETE CULVERT PIPE
RCP, R.C.P.	REINFORCED CONCRETE PIPE
RMC, R.M.C.	RIGID METALLIC CONDUIT
RNMC, R.N.M.C.	RIGID NON-METALLIC CONDUIT
ROW, R.O.W.	RIGHT OF WAY
R.R.	RAILROAD
RTE., RT.	ROUTE
SAN.	SANITARY
SDWK.	SIDEWALK
S.H.D.	STATE HIGHWAY DEPARTMENT
SHLD.	SHOULDER
℄, S.L.	SURVEY LINE
S.O.D.	SUBBASE OUTLET DRAIN
STY.	STORY
T	TANGENT
TBA	TO BE ABANDONED
TBR	TO BE REMOVED (PAID FOR UNDER CLEARING SITE)
TEL.	TELEPHONE
TEMP.	TEMPORARY
THK., TH.	THICK
TYP.	TYPICAL
U.D.	UNDERDRAIN
UP, U.P.	UTILITY POLE
VAR.	VARIABLE, VARIES
W.C.V.C.	WHITE CONCRETE VERTICAL CURB
WM	WATER METER
X-SECT	CROSS SECTION
T.G.R.T.	TANGENT GUIDE RAIL TERMINAL
F.G.R.T.	FLARED GUIDE RAIL TERMINAL
B.G.R.A.	BEAM GUIDE RAIL ANCHORAGE

GENERAL NOTES:

1. PLANS FOR THE "ROUTE U.S. 46 LITTLE FERRY CIRCLE" (PART A) ARE STATED IN NJ STATE PLANE GRID COORDINATES. CONTROLS SPECIFIED WITHIN THE TIE SHEETS OF PART A SHALL GOVERN CONSTRUCTION OF THIS PORTION OF THE PROJECT. PLANS FOR THE "ROUTE 46 HACKENSACK RIVER BRIDGE" (PART B) ARE STATED IN NJ STATE PLANE GROUND COORDINATES. CONTROLS SPECIFIED WITHIN THE TIE SHEETS OF PART B SHALL GOVERN CONSTRUCTION OF THIS PORTION OF THE PROJECT.

N.J. PLANE COORDINATE SYSTEM

North Arrow To Be Used On Standard Construction Sheets Where Bearings Refer To N. J. Plane Coordinate System

N.T.S.

C-1 / C-7

NEW JERSEY DEPARTMENT OF TRANSPORTATION

CONSTRUCTION PLANS

ROUTE U.S. 46 LITTLE FERRY CIRCLE

CONTRACT NO. 069950373

PARSONS BRINCKERHOFF, INC.
CERTIFICATION OF AUTHORIZATION NO. 24GA28029800

MICHAEL D. HELMLINGER
N.J. PROFESSIONAL ENGINEER NO. 24GE03812100

13

PARSONS BRINCKERHOFF CADD DATA

OPERATOR	Detore	QUEUE	\\ampr1pr-t01\PRIPL03.BW\IP
PLOT DATE	08-MAR-2013 09:03		
PENTABLE	etx.tbl		
DESIGN FILE	T:\20063\cp00.dgn		

STATE	FEDERAL PROJECT NO.
N.J.	

BOROUGH OF LITTLE FERRY

COUNTY OF BERGEN

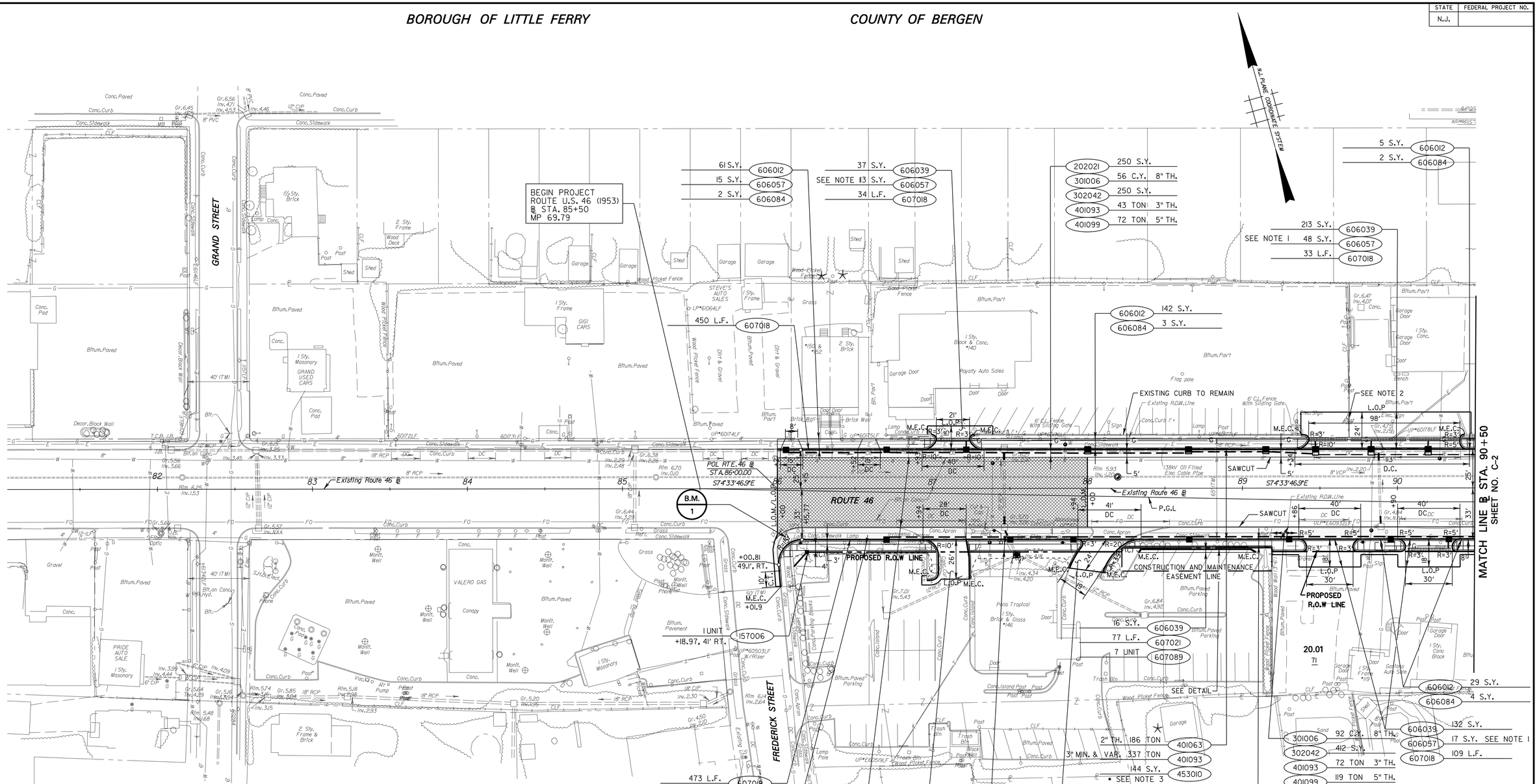

CURB RAMP LOCATIONS

STATION	OFFSET	TYPE
86+06	38' RIGHT	5
86+98	38' RIGHT	5
86+98	30' LEFT	5
87+26	38' RIGHT	5
87+29	30' LEFT	5
87+92	38' RIGHT	5
88+28	36' RIGHT	5
89+37	37' RIGHT	5
89+38	30' LEFT	5
89+76	38' RIGHT	5
90+00	38' RIGHT	5
90+40	38' RIGHT	5
90+47	30' LEFT	5

ITEM NO.	TO BE CONSTRUCTED	CONTRACT QUANTITY
157006M	MONUMENT	1 UNIT
202021P	REMOVAL OF PAVEMENT	250 S.Y.
301006P	SUBBASE	148 C.Y.
302042P	DENSE-GRADED AGGREGATE BASE COURSE, 8" THICK	662 S.Y.
401009P	HMA MILLING, 3" OR LESS	1026 S.Y.
401063M	HOT MIX ASPHALT 12.5H76 SURFACE COURSE	337 TON
401093M	HOT MIX ASPHALT 19H76 INTERMEDIATE COURSE	452 TON
401099M	HOT MIX ASPHALT 25M64 BASE COURSE	191 TON
453005M	FULL DEPTH REINFORCED CONCRETE PAVEMENT REPAIR, V	261 S.Y.
606012P	CONCRETE SIDEWALK, 4" THICK	363 S.Y.
606039P	HOT MIX ASPHALT DRIVEWAY, 6" THICK	510 S.Y.
606057P	CONCRETE DRIVEWAY, REINFORCED, 6" THICK	93 S.Y.
606084P	DETECTABLE WARNING SURFACE	17 S.Y.
607018P	9" X 16" CONCRETE VERTICAL CURB	1219 L.F.
607021P	9" X 18" CONCRETE VERTICAL CURB	77 L.F.
607089M	PRECAST CONCRETE WHEEL STOPS	7 UNIT
811150M	LANDSCAPE ACCENT WALL	140 S.F.

B.M. 1 - (PB-8) - DOCK SPIKE, EXISTING RT. 46 @ STA. 86+05.70, 31.51' RT. ELEV. 6.12'

NOTES:

1. IN LOCATIONS WHERE IS PROPOSED TRENCH DRAIN THE AREA BETWEEN TRENCH DRAIN AND D.C. SHALL BE CONCRETE DRIVE, REINFORCED 6" THICK.
2. CONTRACTOR TO MAINTAIN EXISTING FENCE/GATE & SIGN.
3. FOR LOCATION OF FULL DEPTH REINFORCED CONCRETE REPAIR, VES SEE CONSTRUCTION DETAILS.

NEW JERSEY DEPARTMENT OF TRANSPORTATION

CONSTRUCTION PLANS

ROUTE U.S. 46 LITTLE FERRY CIRCLE

CONTRACT NO. 069950373

PARSONS BRINCKERHOFF, INC.
CERTIFICATION OF AUTHORIZATION NO. 24GA28029800

MICHAEL D. HELMLINGER
N.J. PROFESSIONAL ENGINEER NO. 24GE03812100

14

PARSONS BRINCKERHOFF CADD DATA

OPERATOR	Detore	QUEUE	\\ampr|pr+01\PRIPL03.BW|P
PLOT DATE	08-MAR-2013 09:03		
PENTABLE	ehx.tbl		
DESIGN FILE	T:\20063\cp01.dgn		

STATE	FEDERAL PROJECT NO.
N.J.	

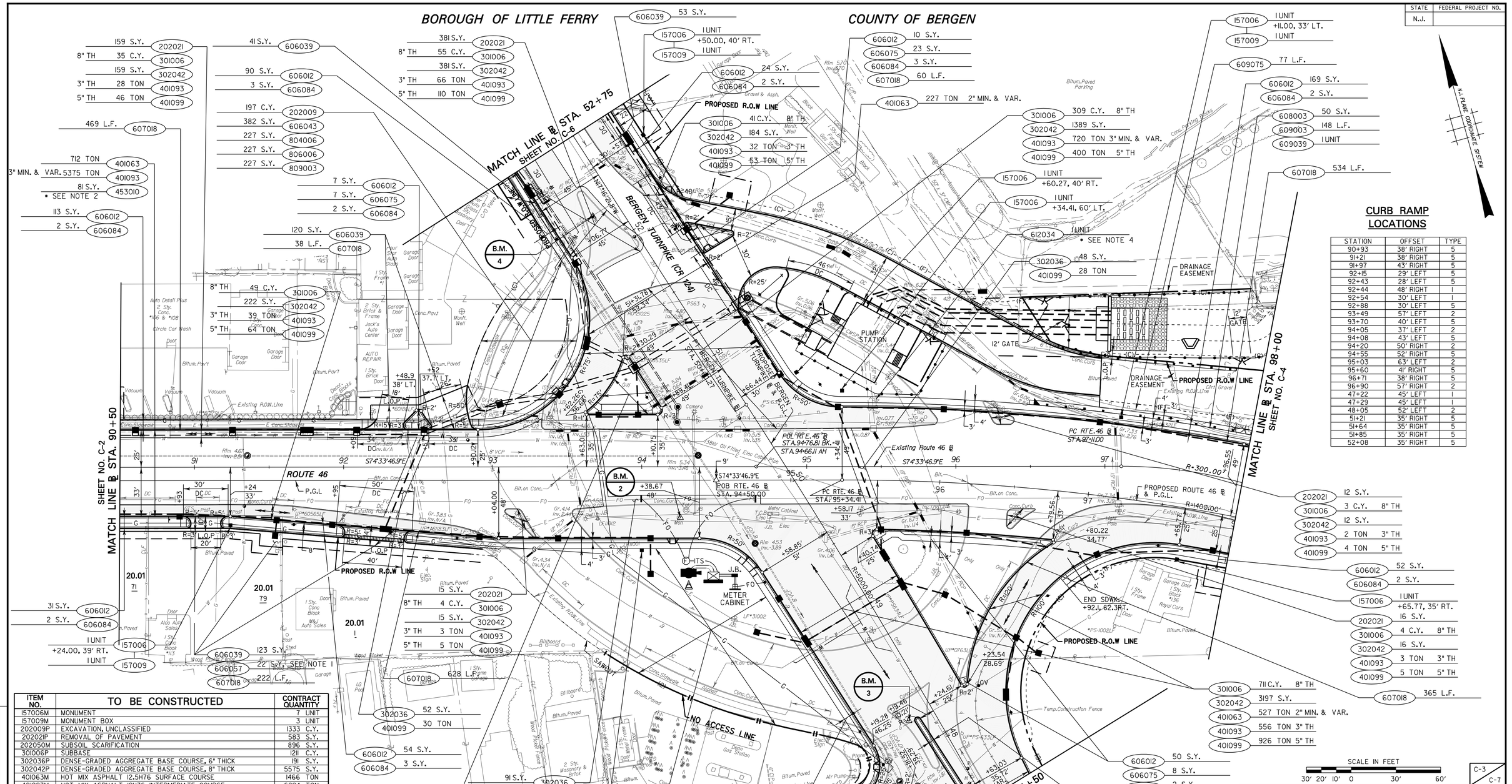

CURB RAMP LOCATIONS

STATION	OFFSET	TYPE
90+93	38' RIGHT	5
91+21	38' RIGHT	5
91+97	43' RIGHT	5
92+15	29' LEFT	5
92+43	28' LEFT	5
92+44	48' RIGHT	1
92+54	30' LEFT	1
92+88	30' LEFT	5
93+49	57' LEFT	2
93+70	40' LEFT	5
94+05	37' LEFT	2
94+08	43' LEFT	5
94+20	50' RIGHT	2
94+55	52' RIGHT	5
95+03	63' LEFT	2
95+60	41' RIGHT	5
96+71	38' RIGHT	5
96+90	57' RIGHT	2
47+22	45' LEFT	1
47+29	45' LEFT	1
48+05	52' LEFT	2
51+21	35' RIGHT	5
51+64	35' RIGHT	5
51+85	35' RIGHT	5
52+08	35' RIGHT	5

ITEM NO.	TO BE CONSTRUCTED	CONTRACT QUANTITY
157006M	MONUMENT	7 UNIT
157009M	MONUMENT BOX	3 UNIT
202009P	EXCAVATION, UNCLASSIFIED	1333 C.Y.
202021P	REMOVAL OF PAVEMENT	583 S.Y.
202050M	SUBSOIL SCARIFICATION	896 S.Y.
301006P	SUBBASE	1211 C.Y.
302036P	DENSE-GRADED AGGREGATE BASE COURSE, 6" THICK	191 S.Y.
302042P	DENSE-GRADED AGGREGATE BASE COURSE, 8" THICK	5575 S.Y.
401063M	HOT MIX ASPHALT 12.5H76 SURFACE COURSE	1466 TON
401093M	HOT MIX ASPHALT 19H76 INTERMEDIATE COURSE	6824 TON
401099M	HOT MIX ASPHALT 25M64 BASE COURSE	1724 TON
453005M	FULL DEPTH REINFORCED CONCRETE PAVEMENT REPAIR, V	81 S.Y.
606012P	CONCRETE SIDEWALK, 4" THICK	803 S.Y.
606039P	HOT MIX ASPHALT DRIVEWAY, 6" THICK	337 S.Y.
606043P	STONE OR GRAVEL DRIVEWAY, 4" THICK	382 S.Y.
606057P	CONCRETE DRIVEWAY, REINFORCED, 6" THICK	22 S.Y.
606075P	CONCRETE ISLAND, 4" THICK	69 S.Y.
606084P	DETECTABLE WARNING SURFACE	32 S.Y.
607018P	9" X 16" CONCRETE VERTICAL CURB	2484 L.F.
608003P	NONVEGETATIVE SURFACE, HOT MIX ASPHALT	50 S.Y.
609003M	BEAM GUIDE RAIL	148 L.F.
609039M	BEAM GUIDE RAIL ANCHORAGE	1 UNIT
609075M	REMOVAL OF BEAM GUIDE RAIL	77 L.F.
612034M	RELOCATE SPECIALIZED SIGN	1 UNIT
804006P	TOPSOILING, 4" THICK	2044 S.Y.
804020P	PLANTING SOIL, 36" THICK	896 S.Y.
806006P	FERTILIZING AND SEEDING, TYPE A-3	2044 S.Y.
809003M	STRAW MULCHING	2044 S.Y.

B.M. 2 - (BET-1) - D.O.T. MONUMENT, EXISTING RT.46 @ STA. 94+25.87, 34.23' RT. ELEV. 6.08'
B.M. 3 - (BET-4) - MONUMENT IN C/IRON BOX, PROP. BERGEN TURNPIKE @ STA. 52+22.05, 18.14' LT. ELEV. 4.95'
B.M. 4 - (BET-3) - MONUMENT IN BOX, PROP. BERGEN TURNPIKE @ STA. 48+21.86, 17.58' LT. ELEV. 5.50'

NOTES:

1. IN PROPOSED TRENCH DRAIN LOCATIONS THE AREA BETWEEN TRENCH DRAIN AND D.C. SHALL BE CONCRETE DRIVE, REINFORCED 6" THICK.
2. FOR LOCATION OF FULL DEPTH REINFORCED CONCRETE REPAIR, VES SEE CONSTRUCTION DETAILS.
3. SEE SHEET C-7 FOR ITEMS RELATED TO PUMP STATION AND SITE WORK.
4. FOR LIMITS OF SUBSOIL SCARIFICATION AND RELOCATED SPECIALIZED SIGN SEE SHEET L-2.

SCALE IN FEET
30' 20' 10' 0 30' 60'

C-3
C-7

NEW JERSEY DEPARTMENT OF TRANSPORTATION

CONSTRUCTION PLANS

ROUTE U.S. 46 LITTLE FERRY CIRCLE

CONTRACT NO. 069950373

PARSONS BRINCKERHOFF, INC.
CERTIFICATION OF AUTHORIZATION NO. 24GA28029800

MICHAEL D. HELMLINGER
N.J. PROFESSIONAL ENGINEER NO. 24GE03812100

15

PARSONS BRINCKERHOFF CADD DATA

OPERATOR	Detore	QUEUE	\\ampr1pr-t01\PRIPL03_BW.IP
PLOT DATE	08-MAR-2013 09:03		
PENTABLE	etrx.tbl		
DESIGN FILE	T:\20063\cp02.dgn		

STATE	FEDERAL PROJECT NO.
N.J.	

BOROUGH OF LITTLE FERRY

COUNTY OF BERGEN

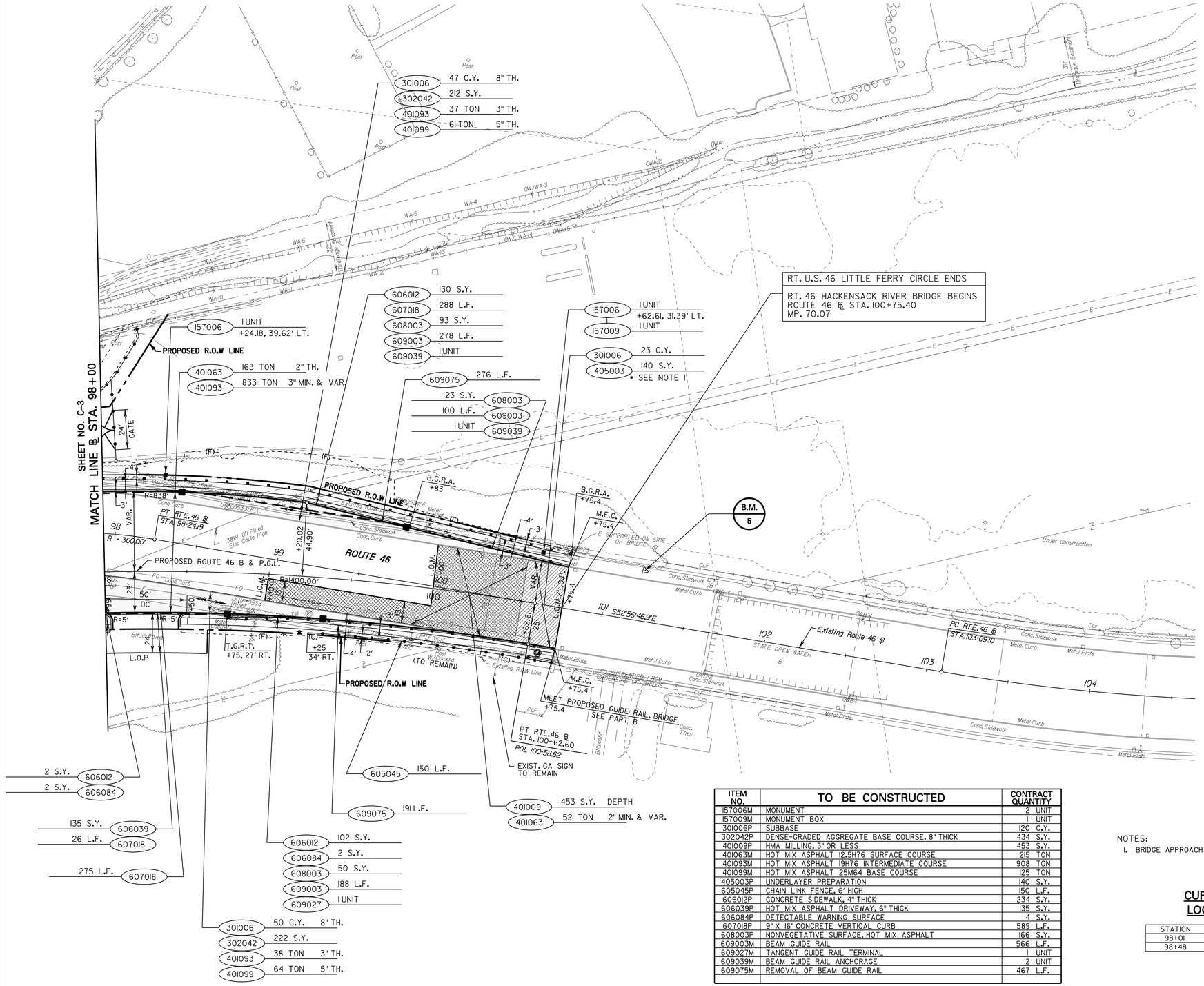

B.M. 5 - (PB-65) - MAG NAIL IN SIDEWALK, EXISTING RT. 46 ℄ STA. 101+21.24, 30.72' LT. ELEV. 23.04'

ITEM NO.	TO BE CONSTRUCTED	CONTRACT QUANTITY
157006M	MONUMENT	2 UNIT
157009M	MONUMENT BOX	1 UNIT
301006P	SUBBASE	120 C.Y.
302042P	DENSE-GRADED AGGREGATE BASE COURSE, 8" THICK	434 S.Y.
401009P	HMA MILLING, 3" OR LESS	453 S.Y.
401063M	HOT MIX ASPHALT 12.5H76 SURFACE COURSE	215 TON
401093M	HOT MIX ASPHALT 19H76 INTERMEDIATE COURSE	908 TON
401099M	HOT MIX ASPHALT 25M64 BASE COURSE	125 TON
405003P	UNDERLAYER PREPARATION	140 S.Y.
605045P	CHAIN LINK FENCE, 6' HIGH	150 L.F.
606012P	CONCRETE SIDEWALK, 4" THICK	234 S.Y.
606039P	HOT MIX ASPHALT DRIVEWAY, 6" THICK	135 S.Y.
606084P	DETECTABLE WARNING SURFACE	4 S.Y.
607018P	9" X 16" CONCRETE VERTICAL CURB	589 L.F.
608003P	NONVEGETATIVE SURFACE, HOT MIX ASPHALT	166 S.Y.
609003M	BEAM GUIDE RAIL	566 L.F.
609027M	TANGENT GUIDE RAIL TERMINAL	1 UNIT
609039M	BEAM GUIDE RAIL ANCHORAGE	2 UNIT
609075M	REMOVAL OF BEAM GUIDE RAIL	467 L.F.

NOTES:

1. BRIDGE APPROACH SLABS PAID FOR IN PART B.

CURB RAMP LOCATIONS

STATION	OFFSET	TYPE
98+01	30' RIGHT	5
98+48	30' RIGHT	5

SCALE IN FEET

30' 20' 10' 0 30' 60'

C-4 / C-7

NEW JERSEY DEPARTMENT OF TRANSPORTATION

CONSTRUCTION PLANS

ROUTE U.S. 46 LITTLE FERRY CIRCLE

CONTRACT NO. 069950373

PARSONS BRINCKERHOFF, INC.

CERTIFICATION OF AUTHORIZATION NO. 24GA28029800

MICHAEL D. HELMLINGER

N.J. PROFESSIONAL ENGINEER NO. 24GE03812100

16

PARSONS BRINCKERHOFF CADD DATA

OPERATOR	Detore	QUEUE	\\amprlpr10\PRIPL03.BW.LP
PLOT DATE	08-MAR-2013 09:03		
PENTABLE	ehx.tbl		
DESIGN FILE	T:\20063\vcp03.dgn		

STATE	FEDERAL PROJECT NO.
N.J.	

BOROUGH OF LITTLE FERRY

COUNTY OF BERGEN

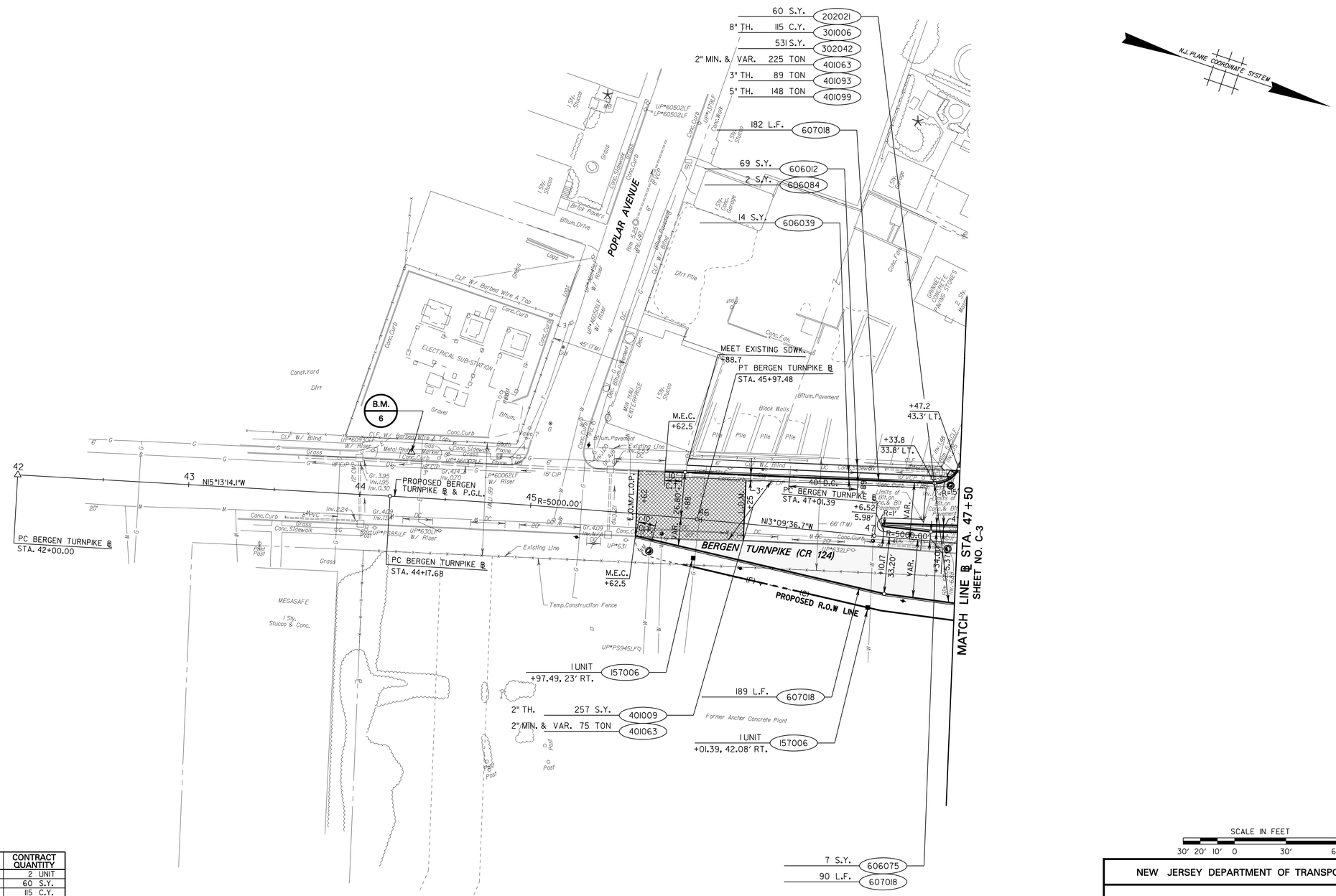

ITEM NO.	TO BE CONSTRUCTED	CONTRACT QUANTITY
157006M	MONUMENT	2 UNIT
202021P	REMOVAL OF PAVEMENT	60 S.Y.
301006P	SUBBASE	115 C.Y.
302042P	DENSE-GRADED AGGREGATE BASE COURSE, 8" THICK	531 S.Y.
401009P	HMA MILLING, 3" OR LESS	257 S.Y.
401063M	HOT MIX ASPHALT 12.5H76 SURFACE COURSE	300 TON
401093M	HOT MIX ASPHALT 19H76 INTERMEDIATE COURSE	89 TON
401099M	HOT MIX ASPHALT 25M64 BASE COURSE	148 TON
606012P	CONCRETE SIDEWALK, 4" THICK	69 S.Y.
606039P	HOT MIX ASPHALT DRIVEWAY, 6" THICK	14 S.Y.
606075P	CONCRETE ISLAND, 4" THICK	7 S.Y.
606084P	DETECTABLE WARNING SURFACE	2 S.Y.
607018P	9" X 16" CONCRETE VERTICAL CURB	461 L.F.

B.M. 6 - (PB-59) - REBAR WITH CAP, PROP. BERGEN TURNPIKE STA. 44+28.67, 26.30' LT. ELEV. 4.77'

CURB RAMP LOCATIONS

STATION	OFFSET	TYPE
47+42	40' LEFT	5

C-5 / C-7

NEW JERSEY DEPARTMENT OF TRANSPORTATION

CONSTRUCTION PLANS

ROUTE U.S. 46 LITTLE FERRY CIRCLE

CONTRACT NO. 069950373

PARSONS BRINCKERHOFF, INC.
CERTIFICATION OF AUTHORIZATION NO. 24GA28029800

MICHAEL D. HELMLINGER
N.J. PROFESSIONAL ENGINEER NO. 24GE03812100

17

PARSONS BRINCKERHOFF CADD DATA
OPERATOR Detore QUEUE \\cmprlpr+01\PRIPL03_BW_IP
PLOT DATE 08-MAR-2013 09:03
PENTABLE ehx.tbl
DESIGN FILE T:\20063\cp04.dgn

STATE	FEDERAL PROJECT NO.
N.J.	

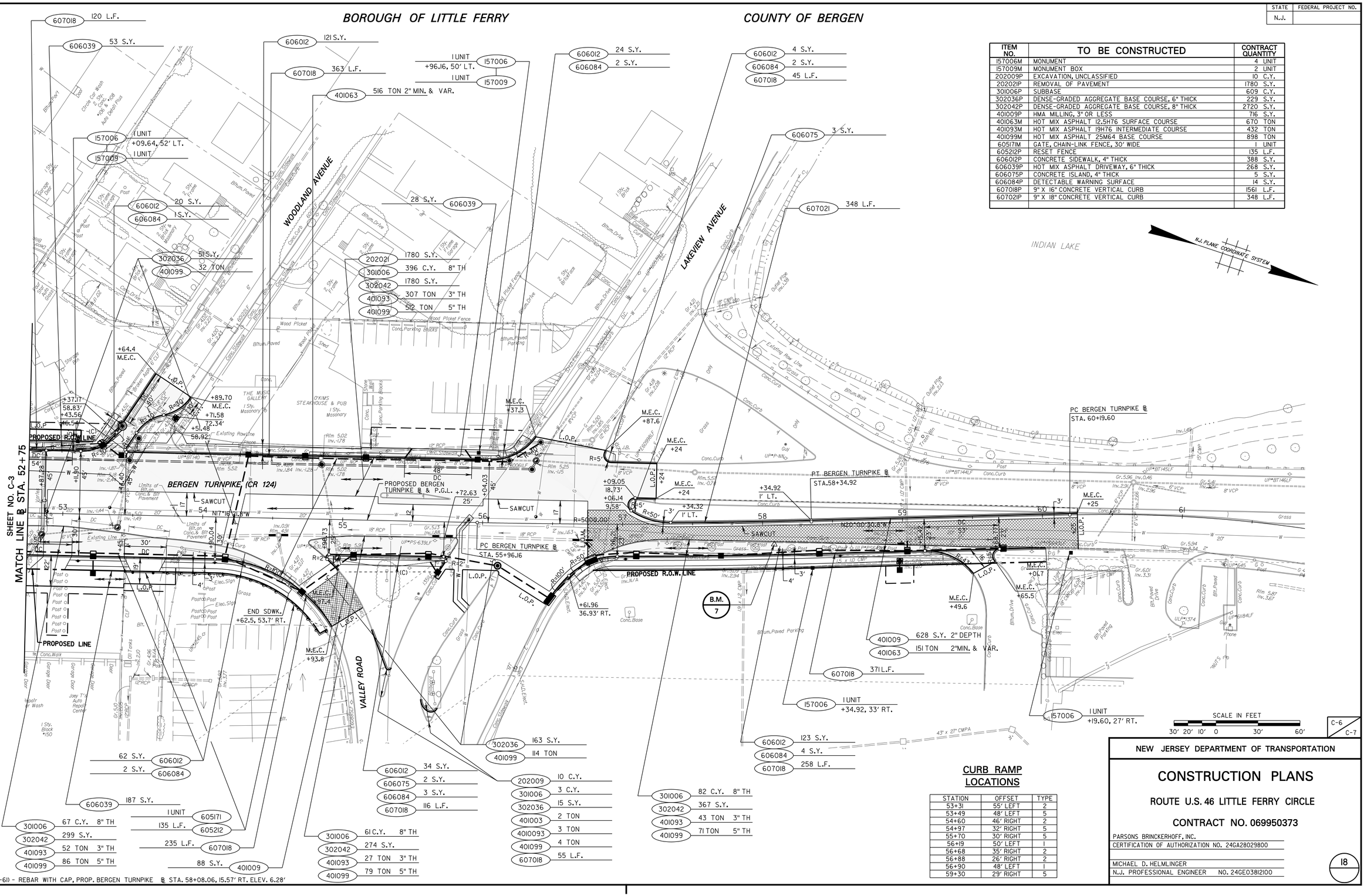

ITEM NO.	TO BE CONSTRUCTED	CONTRACT QUANTITY
157006M	MONUMENT	4 UNIT
157009M	MONUMENT BOX	2 UNIT
202009P	EXCAVATION, UNCLASSIFIED	10 C.Y.
202021P	REMOVAL OF PAVEMENT	1780 S.Y.
301006P	SUBBASE	609 C.Y.
302036P	DENSE-GRADED AGGREGATE BASE COURSE, 6" THICK	229 S.Y.
302042P	DENSE-GRADED AGGREGATE BASE COURSE, 8" THICK	2720 S.Y.
401009P	HMA MILLING, 3" OR LESS	716 S.Y.
401063M	HOT MIX ASPHALT 12.5H76 SURFACE COURSE	670 TON
401093M	HOT MIX ASPHALT 19H76 INTERMEDIATE COURSE	432 TON
401099M	HOT MIX ASPHALT 25M64 BASE COURSE	898 TON
605171M	GATE, CHAIN-LINK FENCE, 30' WIDE	1 UNIT
605212P	RESET FENCE	135 L.F.
606012P	CONCRETE SIDEWALK, 4" THICK	388 S.Y.
606039P	HOT MIX ASPHALT DRIVEWAY, 6" THICK	268 S.Y.
606075P	CONCRETE ISLAND, 4" THICK	5 S.Y.
606084P	DETECTABLE WARNING SURFACE	14 S.Y.
607018P	9" X 16" CONCRETE VERTICAL CURB	1561 L.F.
607021P	9" X 18" CONCRETE VERTICAL CURB	348 L.F.

CURB RAMP LOCATIONS

STATION	OFFSET	TYPE
53+31	55' LEFT	2
53+49	48' LEFT	5
54+60	46' RIGHT	2
54+97	32' RIGHT	5
55+70	30' RIGHT	5
56+19	50' LEFT	1
56+68	35' RIGHT	2
56+88	26' RIGHT	2
56+90	48' LEFT	1
59+30	29' RIGHT	5

NEW JERSEY DEPARTMENT OF TRANSPORTATION

CONSTRUCTION PLANS

ROUTE U.S. 46 LITTLE FERRY CIRCLE

CONTRACT NO. 069950373

PARSONS BRINCKERHOFF, INC.
CERTIFICATION OF AUTHORIZATION NO. 24GA28029800

MICHAEL D. HELMLINGER
N.J. PROFESSIONAL ENGINEER NO. 24GE03812100

18

B.M. 7 - (PB-61) - REBAR WITH CAP, PROP. BERGEN TURNPIKE ℞ STA. 58+08.06, 15.57' RT. ELEV. 6.28'

PARSONS BRINCKERHOFF CADD DATA

OPERATOR	Detore	QUEUE	\\amprlpr-t01\PRIPL03_BW\P
PLOT DATE	08-MAR-2013 09:03		
PENTABLE	etrx.tbl		
DESIGN FILE	T:\20063\cp05.dgn		

STATE	FEDERAL PROJECT NO.
N.J.	

BOROUGH OF LITTLE FERRY

COUNTY OF BERGEN

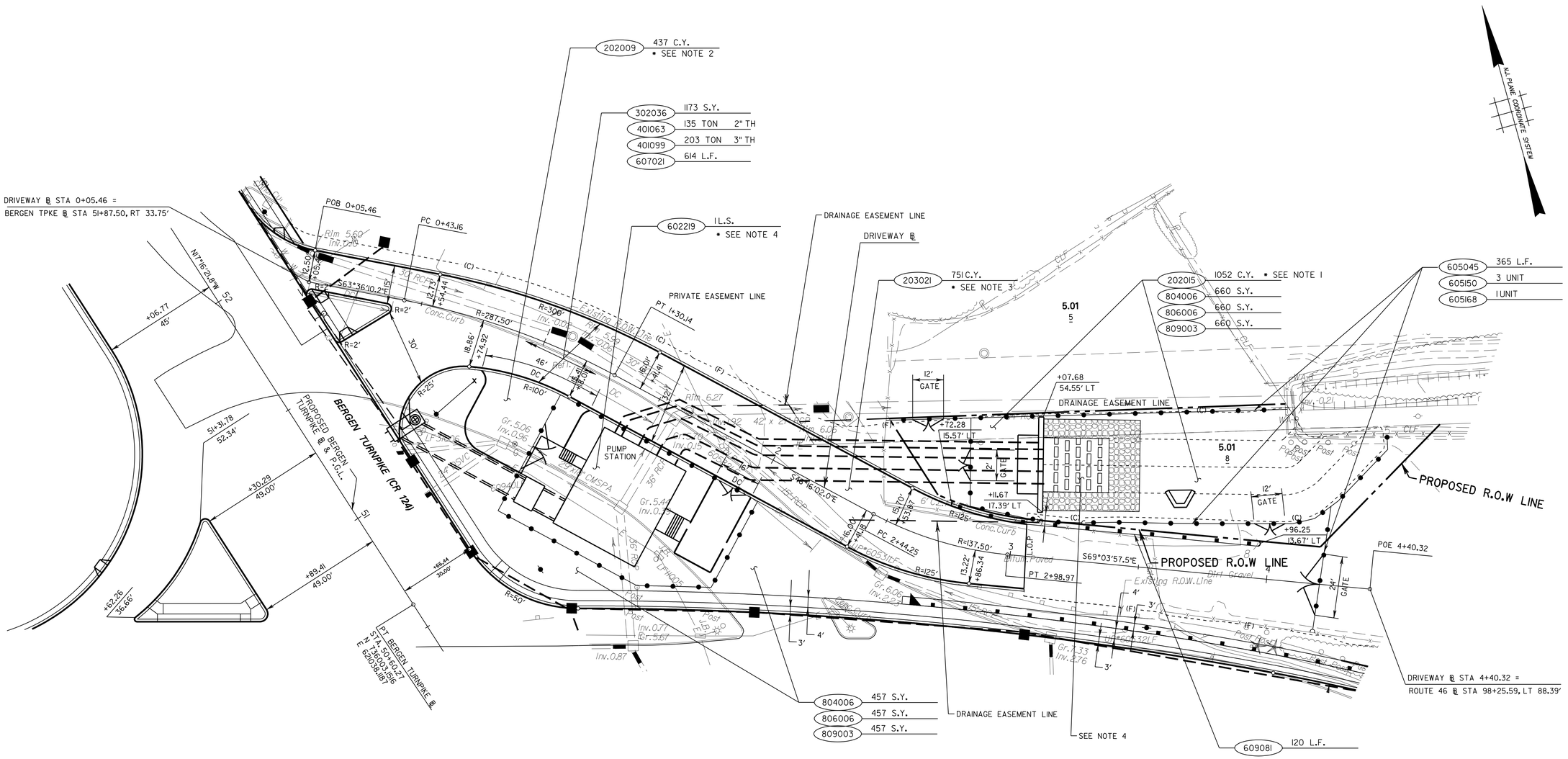

ITEM NO.	TO BE CONSTRUCTED	CONTRACT QUANTITY
202009P	EXCAVATION, UNCLASSIFIED	437 C.Y.
202015P	EXCAVATION, REGULATED MATERIAL	1052 C.Y.
203021P	I-14 SOIL AGGREGATE	751 C.Y.
302036P	DENSE-GRADED AGGREGATE BASE COURSE, 6" THICK	1173 S.Y.
401063M	HOT MIX ASPHALT 12.5H76 SURFACE COURSE	135 TON
401099M	HOT MIX ASPHALT 25M64 BASE COURSE	203 TON
602219P	STORMWATER PUMPING STATION	1 L.S.
605045P	CHAIN-LINK FENCE, 6' HIGH	365 L.F.
605150M	GATE, CHAIN-LINK FENCE, 12' WIDE	3 UNIT
605168M	GATE, CHAIN-LINK FENCE, 24' WIDE	1 UNIT
607021P	9" X 18" CONCRETE VERTICAL CURB	614 L.F.
609081M	WOOD BEAM RAIL, WEATHERING STEEL POSTS	120 L.F.
804006P	TOPSOILING, 4" THICK	1117 S.Y.
806006P	FERTILIZING AND SEEDING, TYPE A-3	1117 S.Y.
809003M	STRAW MULCHING	1117 S.Y.

NOTES:

1. VOLUME OF REGULATED MATERIAL ESTIMATED TO BE WITHIN EXISTING PROPERTY LIMITS OF BLOCK 5.01 LOT 8.01.
2. VOLUME OF EXCAVATION, UNCLASSIFIED ESTIMATED TO BE WITHIN EXISTING NJDOT ROW.
3. VOLUME OF I-14 SOIL AGGREGATE ESTIMATED TO BE BETWEEN THE OUTSIDE OF PROPOSED SIDEWALK AND THE PROPOSED SLOPE LIMITS.
4. SEE PUMP STATION PLANS & DETAIL FOR PUMP STATION, HEADWALL AND ENERGY DISSIPATOR.

SCALE IN FEET

20' 10' 0 20' 40'

C-7 / C-7

NEW JERSEY DEPARTMENT OF TRANSPORTATION

CONSTRUCTION PLANS

ROUTE U.S. 46 LITTLE FERRY CIRCLE

CONTRACT NO. 069950373

PARSONS BRINCKERHOFF, INC.
CERTIFICATION OF AUTHORIZATION NO. 24GA28029800

MICHAEL D. HELMLINGER
N.J. PROFESSIONAL ENGINEER NO. 24GE03812100

19

PARSONS BRINCKERHOFF CADD DATA

OPERATOR	Detore	QUEUE \\ampr1pr+t01\PRIPL03_BW.IP
PLOT DATE	08-MAR-2013 09:03	
PENTABLE	ehx.tbl	
DESIGN FILE	T:\20063\cp06.dgn	

ENVIRONMENTAL NOTES AND COMMITMENTS

1. SENSITIVE AREAS - DO NOT ENCROACH UPON OR STORE ANY EQUIPMENT/VEHICLE/ MATERIALS IN WETLANDS/TRANSITION AREAS/STATE OPEN WATER AREAS/FLOODPLAINS/ RIPARIAN BUFFER AREAS BEYOND THE HEAVY DUTY ORANGE SILT FENCE OR CAUTION FENCE AS SHOWN ON THE PLANS. ADHERE TO THE LOCATIONS OF THE SILT FENCE AND CAUTION FENCE. THE ENVIRONMENTAL PERMITS DO NOT ALLOW FOR ENCROACHMENT BEYOND THE FENCING LOCATIONS. IN ADDITION, DO NOT LOCATE STOCKPILES, VEHICLES, CONCRETE WASHOUT FACILITIES, AND/OR EQUIPMENT WITHIN 50 FEET, IF FEASIBLE, OF A SLOPE, DRAINAGE FACILITY, WATERBODY, WETLAND, FLOODPLAIN, OR OTHER ENVIRONMENTALLY SENSITIVE AREA. PROTECT STOCKPILE BASES WITH A HAY BALE BARRIER OR SILT FENCE.

2. ALL TERMS AND CONDITIONS OF THE ENVIRONMENTAL PERMITS ARE TO BE ADHERED TO. KEEP A COPY OF ALL PERMITS/APPROVALS AT THE WORK SITE, AND EXHIBIT THEM UPON REQUEST OF ANY PERSON.

3. MAKE NO CHANGES IN PLANS OR SPECIFICATION EXCEPT WITH THE PRIOR WRITTEN PERMISSION OF THE NJDEP. ANY CONSTRUCTION, GRADING, REMOVAL OR VEGETATION, OR OTHER ACTIVITY AT THIS SITE THAT AFFECTS A REGULATED AREA, OTHER THAN SPECIFICALLY APPROVED BY THE ENVIRONMENTAL PERMITS OR AS DETAILED BY THE APPROVED DRAWINGS, REQUIRES ADDITIONAL WRITTEN APPROVALS FROM THE NJDEP. THE COMMENCEMENT OF SUCH REGULATED ACTIVITIES WITHOUT THE APPROPRIATE APPROVALS IS IN VIOLATION OF STATE LAW. CONSULT WITH THE NJDOT BUREAU OF LANDSCAPE ARCHITECTURE AND ENVIRONMENTAL SOLUTIONS' ENVIRONMENTAL TEAM REGARDING POTENTIAL PERMIT MODIFICATIONS.

4. PERFORM THE WORK IN ACCORDANCE WITH THE NJDOT STANDARDS FOR SOIL EROSION AND SEDIMENT CONTROL AND AS SPECIFIED IN THE CURRENT NJDOT SPECIFICATIONS.

5. ALL SOIL EROSION AND SEDIMENT CONTROL PRACTICES AND CAUTION FENCE ARE TO BE INSTALLED PRIOR TO ANY MAJOR SOIL DISTURBANCE, OR IN THEIR PROPER SEQUENCE, AND MAINTAIN UNTIL PERMANENT PROTECTION IS ESTABLISHED. CORRECT NON-FUNCTIONING SOIL EROSION AND SEDIMENT CONTROL MEASURES AND SITE WASTE CONTROL MEASURES WITHIN 24 HOURS AND AS SPECIFIED IN SECTION 158 OF THE SPECIFICATIONS. ALL ORANGE FENCE WILL REMAIN IN PLACE FOR THE DURATION OF CONSTRUCTION. THE COLOR OF THE SILT FENCE INDICATED ON THE PLANS MUST BE ADHERED TO. BLACK SILT FENCE CAN NOT BE SUBSTITUTED FOR ORANGE AND VICE VERSA.

6. THE RE MAY LIMIT CLEARING, GRADING, OR OTHER SOIL DISTURBING ACTIVITIES TO A MAXIMUM OF 17 ACRES BASED ON SITE CONDITIONS AND THE CONTRACTOR'S ABILITY TO INSTALL AND MAINTAIN SOIL EROSION AND SEDIMENT CONTROL MEASURES.

7. IN ORDER TO PROTECT THE FISHERY RESOURCES WITHIN HACKENSACK RIVER AND ITS TRIBUTARIES, ANY PROPOSED GRADING OR CONSTRUCTION ACTIVITIES (INCLUDING THE INSTALLATION OF COFFERDAMS) WITHIN THE BANKS OF THIS OR ANY OTHER WATERBODY ON SITE ARE PROHIBITED BETWEEN **APRIL 1 AND JUNE 30** OF EACH YEAR. IN ADDITION, ANY ACTIVITY WITHIN THE 100-YEAR FLOODPLAIN OR FLOOD HAZARD AREA DRAINING INTO THE WATERBODY (IES) THAT COULD INTRODUCE SEDIMENT INTO SAID WATERBODY (IES) OR THAT COULD CAUSE AN INCREASE IN THE NATURAL LEVEL OF TURBIDITY IS ALSO PROHIBITED DURING THAT PERIOD. THE NJDEP RESERVES THE RIGHT TO SUSPEND ALL REGULATED ACTIVITIES ON SITE SHOULD IT BE DETERMINED THAT PROPER PRECAUTIONS HAVE NOT BEEN TAKEN TO ENSURE CONTINUOUS COMPLIANCE WITH THESE CONDITIONS.

8. LOW FLOW FISH PASSAGE: THE PLACEMENT OF PIPE CULVERTS MUST BE AT OR JUST SLIGHTLY BELOW EXISTING STREAM BOTTOM INVERTS AS FOUND IMMEDIATELY UPSTREAM AND DOWNSTREAM OF THE CROSSINGS. ASSOCIATED APRON(S) MUST HAVE A CONCAVE BOTTOM TO MATCH THE PIPES AND RIP-RAP MUST BE PLACED, SHAPED AND/OR EMBEDDED INTO THE CHANNEL IN ACCORDANCE WITH THE CULVERT PIPE(S) PLACEMENT TO ALLOW FOR LOW FLOW FISH PASSAGE. THE NJDEP RESERVES THE RIGHT TO SUSPEND ALL REGULATED ACTIVITIES ON SITE SHOULD IT BE DETERMINED THAT PROPER PRECAUTIONS HAVE NOT BEEN TAKEN TO ENSURE CONTINUOUS COMPLIANCE WITH THESE CONDITIONS.

9. ENSURE THE FLOW OF WATERBODIES IS MAINTAINED AT ALL TIMES. PLACE FLOATING TURBIDITY BARRIER AROUND THE WORK AREA/DEWATERING ACTIVITY DISCHARGE SO THAT IT DOES NOT RESTRICT A STREAM CHANNEL BY MORE THAN 50% OF ITS WIDTH/CROSS SECTIONAL AREA. INSTALL THE BARRIER AS CLOSE TO THE SHORE OR STRUCTURE AS PRACTICABLE. PLACEMENT IS TO BE PARALLEL TO STREAM FLOW AND ANCHORED TO THE SHORELINE UPSTREAM AND DOWNSTREAM OF THE WORK AREA, UNLESS OTHERWISE DIRECTED BY THE RE. IF NEEDED, A COFFERDAM SHOULD CORRAL THE WORK AREA. ERECT FLOATING TURBIDITY BARRIER AROUND THE WORK AREA (OUTSIDE OF WHERE THE COFFERDAM WILL BE INSTALLED) PRIOR TO CONSTRUCTING A COFFERDAM. LEAVE THE FLOATING TURBIDITY BARRIER IN PLACE UNTIL WORK IN THAT AREA IS COMPLETED, THE COFFERDAM IS REMOVED (IF APPLICABLE) AND, IF APPLICABLE, THE ADJACENT GROUND AREA HAS ESTABLISHED A FIRM STAND OF VEGETATION.

10. DURING THE COURSE OF CONSTRUCTION, NEITHER THE APPLICANT NOR ITS AGENTS WILL CAUSE OR PERMIT ANY UNREASONABLE INTERFERENCE WITH THE FREE FLOW OF THE STREAM BY PLACING OR DUMPING ANY MATERIALS, EQUIPMENT, DEBRIS OR STRUCTURE WITHIN OR ADJACENT TO THE STREAM CORRIDOR UPON COMPLETION OR ABANDONMENT OF THE WORK. THE APPLICANT AND/OR ITS AGENTS WILL REMOVE AND DISPOSE OF IN A LAWFUL MANNER ALL EXCESS MATERIAL, EQUIPMENT AND DEBRIS FROM THE STREAM CORRIDOR AND ADJACENT LANDS.

11. EARTHEN BERMS WILL NOT BE USED AS COFFERDAMS.

12. PRECAUTIONS MUST BE TAKEN TO PREVENT RAW CONCRETE/GROUT FROM COMING INTO CONTACT WITH WATERBODIES. RAW CONCRETE/GROUT IS TOXIC TO AQUATIC BIOTA. ANY RAW CONCRETE/GROUT THAT COMES IN CONTACT WITH A WATERBODY MUST BE REMOVED IMMEDIATELY. NO PUMPED WATER FROM CONCRETE/GROUT OPERATIONS MAY BE DISCHARGED DIRECTLY TO A WATERBODY. ALL PUMPED WATER IS TO BE DISCHARGED TO A HOLDING TANK OR CONCRETE WASHOUT FACILITY AND MANAGED AS SPECIFIED IN THE CONCRETE WASHOUT SYSTEM SPECIFICATION IN SECTION 158.

13. THE CONTRACTOR IS NOT ALLOWED TO DROP WASTE CONCRETE, DEBRIS, OR OTHER CONSTRUCTION MATERIAL INTO WATERBODIES, UNIMPACTED WETLANDS/TRANSITION AREAS, RIPARIAN BUFFER AREAS, OR OTHER ENVIRONMENTALLY SENSITIVE AREAS. TEMPORARY SHIELDING IS TO BE USED DURING DEMOLITION OF BRIDGES OVER THESE ENVIRONMENTALLY SENSITIVE AREAS TO CATCH DEBRIS. TEMPORARY SHIELDING IS TO BE DESIGNED TO PREVENT FINES, AS WELL AS LARGER PIECES OF DEBRIS, FROM ENTERING THE WATERBODY. IF DEBRIS DOES ACCIDENTALLY FALL INTO ANY OF THESE ENVIRONMENTALLY SENSITIVE AREAS, PROMPTLY REMOVE IT. THE BUREAU OF LANDSCAPE ARCHITECTURE AND ENVIRONMENTAL SOLUTIONS' ENVIRONMENTAL TEAM SHOULD BE CONTACTED FOR GUIDANCE IF RETRIEVAL OF DEBRIS MAY POTENTIALLY CAUSE DAMAGE TO THE ENVIRONMENTALLY SENSITIVE AREA.

14. PUMPING OF SEDIMENT-LADEN WATER FROM DEWATERING ACTIVITIES DIRECTLY INTO STATE OPEN WATERS, FRESHWATER WETLANDS, TRANSITION AREAS, RIPARIAN BUFFERS, OR OTHER ENVIRONMENTALLY SENSITIVE AREAS IS PROHIBITED. NECESSARY PRECAUTIONS MUST BE TAKEN DURING ALL DEWATERING OPERATIONS TO MINIMIZE SEDIMENT TRANSFER. PERFORM DEWATERING AS SPECIFIED IN SECTION 501 OF THE SPECIFICATIONS. STANDARD SOIL EROSION AND SEDIMENT CONTROL ITEMS ARE LISTED IN SECTION 158. BASINS/SEDIMENT CONTROL TANKS/ SEDIMENT CONTROL BAGS NEEDED FOR DEWATERING ACTIVITIES SHOULD NOT BE LOCATED IN UNIMPACTED WETLANDS OR TRANSITION AREAS OR IN FLOODPLAINS, IF FEASIBLE. OTHERWISE, PERMIT MODIFICATIONS MAY BE REQUIRED. CONSTRUCTION OF DEWATERING FACILITIES INVOLVING GROUND DISTURBANCE NEAR A WATERBODY IS TO BE DONE OUTSIDE OF ANY REGULATED PERMIT TIMING RESTRICTION PERIOD. CLEAN AND CLEAR WATER FROM DEWATERING ACTIVITIES SHOULD BE RETURNED TO A PORTION OF THE WATERBODY THAT IS PROTECTED BY TURBIDITY BARRIER WITHOUT CAUSING SCOUR OR EROSION.

15. PLACE SILT FENCE/HAY BALES AROUND SEDIMENT CONTROL BAGS WHERE APPLICABLE. ALSO PLACE FLOATING TURBIDITY BARRIER TO CORRAL THE DISCHARGE AREA IF THE DISCHARGE FROM THE SEDIMENT CONTROL BAG FLOWS INTO A RECEIVING WATERBODY.

16. IMMEDIATELY CEASE AN ACTIVITY THAT CAUSES TURBIDITY BEYOND CONTROL MEASURES.

17. PROTECT ALL DRAINAGE SYSTEM INLETS (NEW AND EXISTING) FROM SILTATION.

18. STABILIZE STORM DRAINAGE OUTLETS BEFORE THE DISCHARGE POINTS BECOME OPERATIONAL.

19. DUST/DIRT CONTROL/TRACKING: EMPLOY CONSTRUCTION METHODS THAT MINIMIZE AIRBORNE DUST AND PREVENT SOILS AND OTHER MATERIALS FROM BEING DEPOSITED ON EXISTING ROADWAYS. APPLY WATER OR OTHER RE APPROVED MATERIALS TO UNPAVED AREAS TO CONTROL DUST CAUSED BY HAULING OR OTHER CONSTRUCTION OPERATIONS. IMMEDIATELY REMOVE ALL SOIL OR OTHER MATERIALS WASHED, DROPPED, SPILLED OR TRACKED OUTSIDE OF THE LIMIT OF DISTURBANCE OR ONTO PUBLIC RIGHT-OF-WAY AND DISPOSE OF IT AS SPECIFIED IN 202.03.07.B OF THE SPECIFICATIONS. PAVED ROADS AND DRIVEWAYS MUST BE KEPT CLEAN AT ALL TIMES.

20. DURING SAWCUTTING, MILLING, CORE SAMPLING, INSTALLING LONGITUDINAL JOINT TIES, DIAMOND GRINDING, SLIP-FORM PAVING, PLACEMENT OF PERMANENT ROADWAY REFLECTIVE MARKERS, AND SIMILAR OPERATIONS THAT COULD CAUSE DUST, SLURRY, AND STORMWATER RUNOFF PROBLEMS, DO NOT CREATE A DUST HAZARD AND ENSURE THAT DEBRIS AND SLURRY DO NOT ENTER INLETS OR ENVIRONMENTALLY SENSITIVE AREAS, SUCH AS STATE OPEN WATERS, FRESHWATER WETLANDS, TRANSITION AREAS, AND RIPARIAN BUFFERS. THIS INCLUDES, BUT IS NOT LIMITED TO, BRIDGE DECK, APPROACH SLAB, AND TRANSITION SLAB SAWCUTTING. PROVIDE FOR CONTINUOUS REMOVAL OF GRINDING RESIDUE FROM THE PAVEMENT SURFACE BEFORE IT IS BLOWN ABOUT BY TRAFFIC MOTION, WIND, OR PRECIPITATION. CONTAIN THE CONCRETE SLURRY AND DISPOSE OF IT AS SPECIFIED IN 202.03.07.B OF THE SPECIFICATIONS. THE CONTRACTOR MAY MANAGE THE SLURRY IN A CONCRETE WASHOUT FACILITY IF THAT ITEM IS PART OF THE CONTRACT.

21. ACID-PRODUCING SOIL: THE PROJECT IS LOCATED WITHIN THE PASSAIC FORMATION WHICH IS NOT AN ACID PRODUCING SOIL; HOWEVER, IF ACIDIC SOIL IS DISCOVERED IT IS TO BE TREATED ACCORDING TO THE NEW JERSEY STANDARDS FOR SOIL EROSION AND SEDIMENT CONTROL AS IS SPECIFIED IN 202.03.05 OF THE SPECIFICATIONS. ENSURE THE CLEANING OF EQUIPMENT USED TO MOVE ACID-PRODUCING SOIL IS CONDUCTED AT A MINIMUM OF 50 FEET, IF FEASIBLE, FROM ANY STATE OPEN WATER, FRESHWATER WETLAND, TRANSITION AREA, RIPARIAN BUFFER, OR OTHER ENVIRONMENTALLY SENSITIVE AREA.

22. EXCAVATED MATERIAL THAT WILL NOT BE USED AS BACKFILL MUST BE DISPOSED OF IN A LAWFUL MANNER OUTSIDE OF ANY REGULATED FLOODPLAIN, OPEN WATER, WETLAND, OR TRANSITION AREA, AND IN SUCH A WAY AS NOT TO INTERFERE WITH THE POSITIVE DRAINAGE OF THE RECEIVING AREA.

23. ENSURE THAT TREES, SHRUBS, GRASSES, AND OTHER VEGETATION LOCATED ON STREAM BANKS AND WITHIN 50 FEET FROM THE TOP OF ALL STREAM BANKS ON SITE ARE NOT DISTURBED FOR ANY REASON, EXCEPT WHERE APPROVED BY THE NJDEP. THIS CONDITION APPLIES TO ALL STREAMS AND WATERS ON SITE, REGARDLESS OF THE CONTRIBUTORY DRAINAGE AREA.

24. ENSURE ALL VEGETATION OUTSIDE LIMITS OF DISTURBANCE IS PRESERVED.

25. UPON COMPLETION OF THE PROJECT, ALL TEMPORARILY DISTURBED AREAS, INCLUDING UPLANDS, STATE OPEN WATER, WETLANDS, AND TRANSITION AREAS, MUST BE RESTORED TO THEIR PRE-CONSTRUCTION GRADES USING NATIVE SOILS AND PLANTED WITH INDIGENOUS NON-INVASIVE VEGETATION AS DIRECTED BY THE RE IN CONSULTATION WITH THE BUREAU OF LANDSCAPE ARCHITECTURE AND ENVIRONMENTAL SOLUTIONS' ENVIRONMENTAL TEAM.

26. IN ORDER TO AVOID ADDITIONAL MITIGATION REQUIREMENTS, ALL TEMPORARY DISTURBANCES TO WETLANDS MUST BE COMPLETED WITHIN SIX MONTHS AFTER THEY ARE BEGUN AND THESE AREAS MUST BE RESTORED TO PRE-CONSTRUCTION CONDITIONS.

27. ENSURE TIMBER MATTING IS USED UNDER EQUIPMENT IN AREAS TO PREVENT SOIL COMPACTIONS.

28. DURING THE INSTALLATION OF REMOVAL OF TREATED TIMBERS IN A WATERBODY, PLACE OIL-ABSORBENT BOOMS AROUND THE WORK AREA.

29. TREATED TIMBERS: TREATED TIMBER PRODUCTS ARE PROHIBITED IN SHELLFISH AREAS (MARINE AND FRESHWATER) AND OTHER ENVIRONMENTALLY SENSITIVE AREAS SUCH AS, BUT NOT LIMITED TO, ESSENTIAL FISH HABITAT, ENDANGERED/THREATENED SPECIES HABITAT, CATEGORY ONE WATERS, TROUT-ASSOCIATED WATERS, AND WETLANDS. NON-POLLUTING MATERIALS, SUCH AS FIBERGLASS COMPOSITES, ARE TO BE USED IN THESE AREAS. USE OF TREATED TIMBER PRODUCTS IN OTHER AREAS REQUIRES NJDOT BUREAU OF LANDSCAPE ARCHITECTURE AND ENVIRONMENTAL SOLUTIONS' APPROVAL PRIOR TO USAGE EXCEPT WHERE SPECIFIED IN THE CONTRACT.

30. IF DIVERS ARE TO BE USED TO INSPECT THE BED OF A WATERBODY, A VIDEO OF THIS INSPECTION MUST BE SUPPLIED TO THE RE FOR HIS REVIEW AND APPROVAL.

31. IF AN ARCHAEOLOGY SITE OR UNDERGROUND STORAGE TANKS ARE UNEXPECTEDLY DISCOVERED DURING CONSTRUCTION, CEASE OPERATIONS IMMEDIATELY AND CONTACT THE BUREAU OF LANDSCAPE ARCHITECTURE AND ENVIRONMENTAL SOLUTIONS THROUGH THE RE.

32. ENSURE A SITE SPECIFIC HEALTH AND SAFETY PLAN IS SUBMITTED AND IMPLEMENTED IN ACCORDANCE WITH ALL APPLICABLE HEALTH AND SAFETY REQUIREMENTS FOR WORK IN AND WITH CONTAMINATED SOIL, SEDIMENT, WASTE AND WATER AND THE MAJOR LANDFILL DISRUPTION APPROVAL. THE PLAN GOVERNS ALL HEALTH AND SAFETY FACETS OF THE PROJECT CONSTRUCTION AND ENCOMPASSES THE ACTIVITIES OF ALL PERSONS WHO ENTER THE SITE.

33. ENSURE ALL PERSONNEL, EQUIPMENT, AND ANCILLARY SERVICES ARE PROVIDED TO COLLECT, ANALYZE, AND TRANSPORT ENVIRONMENTAL SAMPLES REQUIRED TO CHARACTERIZE CONTAMINATED MATERIAL IN ACCORDANCE WITH THE CURRENT VERSIONS OF THE NJDEP FIELD SAMPLING PROCEDURES MANUAL, NJDEP MANAGEMENT OF EXCAVATED SOILS GUIDELINES, APPENDIX I OF THE NJDEP WASTE CLASSIFICATION FORM, AND ACCORDING TO THE RECYCLING OR DISPOSAL FACILITY ACCEPTING THE WASTE.

34. ENSURE ALL PERSONNEL, MATERIALS AND EQUIPMENT ARE PROVIDED TO PROPERLY STORE AND PROTECT CONTAMINATED MATERIAL AT THE EXCAVATION AND IN TEMPORARY STOCKPILES. LOCATE TEMPORARY STOCKPILES IN DRY AREAS SELECTED BY THE CONTRACTOR AND APPROVED BY THE RE. PLACE STOCKPILES ON PLASTIC SHEETING TO PREVENT MIGRATION OF CONTAMINANTS INTO ADJACENT SOILS, SURFACE WATER, AND GROUNDWATER.

35. ENSURE A POLLUTION PREVENTION AND CONTROL PLAN IS DEVELOPED AND IMPLEMENTED TO MANAGE CONTAMINATED WATER AND GROUNDWATER. DO NOT DISCHARGE CONTAMINATED STORMWATER, GROUNDWATER, SEDIMENTS OR FREE PRODUCT TO LOCAL STORM SEWER SYSTEMS OR WATERWAYS EXCEPT AS AUTHORIZED BY A DISCHARGE APPROVAL OR PERMIT.

36. ENSURE ALL PERSONNEL, MATERIALS AND EQUIPMENT ARE PROVIDED TO MOBILIZE, OPERATE AND MAINTAIN AN OIL-WATER SEPARATOR FOR REMOVAL OF FREE PRODUCT AND CONTAMINATED SEDIMENTS GENERATED DURING DEWATERING ACTIVITIES IN AREAS OF PETROLEUM-CONTAMINATED GROUNDWATER. ENSURE THE OIL-WATER SEPARATOR IS A SELF-CONTAINED, FACTORY ASSEMBLED UNIT CAPABLE OF MEETING ALL DISCHARGE APPROVALS OR PERMITS OBTAINED BY THE CONTRACTOR.

37. ENSURE A MATERIAL HANDLING PLAN IS DEVELOPED AND IMPLEMENTED TO MANAGE CONTAMINATED SOIL.

38. STORE PESTICIDES, FERTILIZERS, FUELS, LUBRICANTS, PETROLEUM PRODUCTS, ANTI-FREEZE, PAINTS AND PAINT THINNERS, CLEANING SOLVENTS AND ACIDS, DETERGENTS, CHEMICAL ADDITIVES, AND CONCRETE CURING COMPOUNDS IN CONTAINERS IN A DRY COVERED AREAS. ENSURE MANUFACTURERS' RECOMMENDED APPLICATION RATES, USES, AND METHODS ARE STRICTLY FOLLOWED TO THE EXTENT NECESSARY TO PREVENT OR MINIMIZE THE PRESENCE OF WASTE FROM SUCH MATERIALS IN THE STORMWATER DISCHARGE/RUNOFF FROM THE PROJECT LIMITS. STORE PRODUCTS AT A MINIMUM OF 50 FEET, IF FEASIBLE, FROM A WATERBODY, WETLAND, OR OTHER ENVIRONMENTALLY SENSITIVE AREA.

39. ENSURE THE HANDLING OF WASTE BUILDING MATERIAL, RUBBLE AND OTHER CONSTRUCTION SITE WASTES, INCLUDING LITTER AND HAZARDOUS AND SANITARY WASTES, IS IN ACCORDANCE WITH THE STATE SOLID WASTE MANAGEMENT ACT, N.J.S.A. 13:1E-1 ET SEQ., AND ITS IMPLEMENTING RULES AT N.J.A.C. 7:26, 7:26A, AND 7:26G; THE NEW JERSEY PESTICIDE CONTROL CODE AT N.J.A.C. 7:30; THE STATE LITTER STATUTE (N.J.S.A. 13:1E-99.3); AND OSHA REQUIREMENTS FOR SANITATION AT 29 C.F.R. 1926.

40. ENSURE THE PROJECT LIMITS ARE KEPT CLEAN AND FREE OF DEBRIS, TRASH, AND LITTER. CONTAIN LITTER AND WASTE THAT HAS THE POTENTIAL TO BE TRANSPORTED BY STORMWATER DISCHARGE/RUNOFF. ENSURE THE PROJECT LIMITS HAVE ONE OR MORE DESIGNATED WASTE COLLECTION AREAS ONSITE OR ADJACENT TO THE SITE, AND AN ADEQUATE NUMBER OF CONTAINERS (WITH LIDS OR COVERS) FOR WASTE. ENSURE WASTE IS COLLECTED FROM SUCH CONTAINERS BEFORE THEY OVERFLOW. IMMEDIATELY CLEANUP SPILLS AT SUCH CONTAINERS SHOULD THEY OCCUR.

41. CONCRETE WASHOUT SYSTEM: CONCRETE WASHOUT WITHIN THE PROJECT LIMITS IS PROHIBITED OUTSIDE OF DESIGNATED AREAS. PROVIDE CONCRETE WASHOUT FACILITY(IES) AS SPECIFIED IN THE CONCRETE WASHOUT SYSTEM SPECIFICATION IN SECTION 158. MORE THAN ONE DESIGNATED CONCRETE WASHOUT FACILITY LOCATION MAY BE NECESSARY DEPENDING ON EASE OF ACCESS AND THE AMOUNT OF CONCRETE BEING POURED AT ONE TIME.

42. SANITARY SEWAGE/SEPTAGE DISPOSAL: DISCHARGES OF RAW SANITARY SEWAGE OR SEPTAGE ONSITE ARE STRICTLY PROHIBITED. ENSURE PROPER DISPOSAL OF SANITARY SEWAGE/SEPTAGE. PROVIDE AND MAINTAIN ADEQUATE FACILITIES ADJACENT TO THE WORK SITE FOR ALL WORKERS AND OTHER SANITARY NEEDS.

43. BEFORE THE START OF CONSTRUCTION OPERATIONS, PROVIDE A MINIMUM OF TWO (2) OIL-ONLY EMERGENCY SPILL KITS, WITH EACH KIT CAPABLE OF CLEANING UP AT LEAST 95 GALLONS OF SPILL, WHICH ARE READILY AVAILABLE WITHIN THE PROJECT LIMITS. ENSURE THE KITS ARE AS SPECIFIED IN THE OIL-ONLY EMERGENCY SPILL KIT SPECIFICATION IN SECTION 158. IMMEDIATELY CONTAIN AND CLEAN UP ALL SPILLS. ENSURE CLEANED UP MATERIALS ARE DISPOSED OF IN ACCORDANCE WITH ALL APPLICABLE FEDERAL, STATE, AND LOCAL LAWS, RULES, AND REGULATIONS AND AS SPECIFIED IN 202.03.08 OF THE SPECIFICATIONS. REPLACE COMPONENTS OF SPILL KITS AS USED.

44. IF A SPILL OCCURS, IMMEDIATELY CONTAIN IT AND IMMEDIATELY CONTACT THE NJDEP HOTLINE AT 1-877-WARN DEP (1-877-927-6337), AS WELL AS THE RE. CLEAN UP AND REMEDIATE THE SPILL AS DIRECTED BY NJDEP. SUBMIT AN INCIDENT REPORT TO THE RE AS SPECIFIED IN THE OIL-ONLY EMERGENCY SPILL KIT SPECIFICATION IN SECTION 158.

45. DISCHARGES OF HAZARDOUS SUBSTANCES (AS DEFINED IN N.J.A.C. 7:1E-1.6) IN CONSTRUCTION SITE WASTES ARE SUBJECT TO THE PROVISIONS OF THE SPILL COMPENSATION AND CONTROL ACT, N.J.S.A. 58:10-23.11 ET SEQ., AND OF NEW JERSEY DEPARTMENT OF ENVIRONMENTAL PROTECTION RULES FOR DISCHARGES OF PETROLEUM AND OTHER HAZARDOUS SUBSTANCES AT N.J.A.C. 7:1E.

46. ENSURE REFUELING OPERATIONS ARE CONDUCTED AT A MINIMUM OF 50 FEET, IF FEASIBLE, FROM A WATERBODY, WETLAND, OR OTHER ENVIRONMENTALLY SENSITIVE AREA. DO NOT STORE FUEL TANKS CLOSER THAN 50 FEET, WHERE FEASIBLE, FROM THESE SENSITIVE AREAS. IMMEDIATELY REPAIR LEAKING EQUIPMENT OR REMOVE IT FROM THE PROJECT LIMITS. CLEAN UP THE TAINTED MATERIAL AND DISPOSE OF THE MATERIAL AS SPECIFIED IN 202.03.08 OF THE SPECIFICATION. PROTECT FUELING AREAS FROM RUN-ON AND RUNOFF.

47. ENVIRONMENTAL COMPLIANCE INSPECTIONS (INCLUDING, BUT NOT LIMITED TO, SOIL EROSION AND SEDIMENT CONTROL MEASURES, WATER QUALITY MEASURES, AND SITE WASTE CONTROL OPERATIONS) ARE TO BE PREFORMED BY THE CONTRACTOR AND THE RE AS SPECIFIED IN SECTION 158 OF THE SPECIFICATIONS. COMPLETE THE NJDOT ENVIRONMENTAL COMPLIANCE CHECKLIST AND INSPECTION FORM FOR EACH INSPECTION AND RETAIN THE ORIGINAL WITHIN THE PROJECT LIMITS. MAKE THE FORM AVAILABLE UPON REQUEST.

48. GROUNDWATER MONITORING WELLS IN AND NEAR THE CONSTRUCTION ZONE MUST BE BARRICADED WITH ORANGE SNOW FENCE OR SOME OTHER HIGHLY VISIBLE MATERIAL TO PREVENT THEM FROM BEING DAMAGED. ANY MONITORING WELLS DAMAGED DURING CONSTRUCTION MUST BE REPAIRED OR REPLACED AT THE CONTRACTOR'S EXPENSE.

NJDOT SOIL EROSION AND SEDIMENT CONTROL GENERAL NOTES

1. ALL SOIL EROSION AND SEDIMENT CONTROL MEASURES SHALL BE IN ACCORDANCE WITH THE "NEW JERSEY DEPARTMENT OF TRANSPORTATION STANDARDS FOR SOIL EROSION AND SEDIMENT CONTROL" AND SECTION 158 (2001) OF THE STANDARD SPECIFICATIONS FOR ROAD AND BRIDGE CONSTRUCTION.

2. ALL SOIL EROSION AND SEDIMENT CONTROL PRACTICES SHALL BE INSTALLED PRIOR TO ANY MAJOR SOIL DISTURBANCES OR CONSTRUCTION OPERATION IN THEIR PROPER SEQUENCE. AREAS OF PROPOSED CONSTRUCTION SHALL BE CLEARED ONLY AS REQUIRED. CAUTION (SNOW) AND SILT FENCES ARE TO BE INSTALLED PRIOR TO ANY GRUBBING, CLEARING, GRADING OR OTHER EARTH DISTURBING OR CONSTRUCTION OPERATION. ALL INLETS SHALL BE PROTECTED WITH AN INLET FILTER IMMEDIATELY AFTER INITIAL SITE DISTURBANCE; A CONSTRUCTION DRIVEWAY SHALL BE CONSTRUCTED AND MAINTAINED IN ACCORDANCE WITH SECTION 158 (2001) OF THE STANDARD SPECIFICATIONS. SEDIMENT CONTROL MEASURES SHALL BE MAINTAINED AND INSPECTED ON A REGULAR BASIS UNTIL PERMANENT PROTECTION IS ESTABLISHED.

3. DURING CONSTRUCTION, ANY ADDITIONAL CONTROL MEASURES AS DEEMED NECESSARY TO PREVENT EROSION OR CONTROL SEDIMENT BEYOND THOSE MEASURES SHOWN ON THE APPROVED PLAN SHALL BE INSTALLED OR EMPLOYED AT THE DIRECTION OF THE ENGINEER. ADDITIONAL STABILIZATION MEASURES SHALL BE REQUIRED IF EROSION OCCURS ALONG THE EDGES OF THE PAVEMENT.

4. ANY DISTURBED AREAS THAT WILL BE LEFT EXPOSED MORE THAN FOURTEEN (14) DAYS AND NOT SUBJECT TO CONSTRUCTION TRAFFIC, SHALL IMMEDIATELY RECEIVE A TEMPORARY SEEDING IN COMBINATION WITH STRAW MULCH OR A SUITABLE EQUIVALENT.

5. AT THE TIME WHEN PREPARING THE SITE FOR PERMANENT VEGETATIVE STABILIZATION INCLUDE PERMANENT GRASS SEEDING AND PROVISION FOR TEMPORARY SEEDING AS NECESSARY. IF THE REMOVAL OR TREATMENT OF THE SOIL WILL NOT PROVIDE SUITABLE CONDITIONS, NON-VEGETATIVE MEANS OF PERMANENT GROUND STABILIZATIONS WILL HAVE TO BE EMPLOYED.

6. PERMANENT VEGETATION SHALL BE SEEDED OR SODDED ON ALL EXPOSED AREAS WITHIN TEN (10) DAYS AFTER FINAL GRADING. MULCH SHALL BE USED FOR PROTECTION UNTIL SEEDING IS ESTABLISHED.

7. ANY CHANGES TO THE CERTIFIED SOIL EROSION AND SEDIMENT CONTROL PLANS SHALL REQUIRE THE SUBMISSION OF REVISED SOIL EROSION AND SEDIMENT CONTROL PLANS TO NJDOT. THE REVISED PLANS MUST MEET ALL CURRENT NJDOT SOIL EROSION AND SEDIMENT CONTROL STANDARDS. THE CONTRACTOR SHALL BE RESPONSIBLE FOR REMEDIATING ANY EROSION OR SEDIMENT PROBLEMS THAT ARISE AS A RESULT OF THE ONGOING CONSTRUCTION.

8. CONTRACTOR IS RESPONSIBLE FOR ANY EROSION OR SEDIMENTATION THAT MAY OCCUR BELOW STORM-WATER OUTFALLS OR OFFSITE AS A RESULT OF CONSTRUCTION OF THE PROJECT. DEWATERING SHALL NOT BE DISCHARGED DIRECTLY INTO ANY WATERWAY. THE LOCATION OF DEWATERING BASINS WILL BE DETERMINED AFTER CONSULTATION BETWEEN THE RESIDENT ENGINEER AND EITHER THE OFFICE OF LANDSCAPE ARCHITECTURE OR THE OFFICE OF ENVIRONMENTAL SOLUTIONS.

9. IN ACCORDANCE WITH THE STANDARD FOR MANAGEMENT OF HIGH ACID PRODUCING SOIL ANY SOIL HAVING A PH OF 4 OR LESS OR CONTAINING IRON SULFIDES SHALL BE COVERED WITH A LAYER OF LIME STONE AND A MINIMUM OF 12 INCHES OF SOIL HAVING A PH OF 5 OR MORE PRIOR TO SEEDBED PREPARATION.

SELECTED PERMIT CONDITIONS (SEE ACTUAL PERMITS FOR ALL CONDITIONS)

1. WHILE THE REGULATED ACTIVITIES ARE BEING UNDERTAKEN, NEITHER THE PERMITTEE NOR ITS AGENTS SHALL CAUSE OR PERMIT ANY UNREASONABLE INTERFERENCE WITH THE FREE FLOW OF A REGULATED WATER BY PLACING OR DUMPING ANY MATERIALS, EQUIPMENT, DEBRIS OR STRUCTURES WITHIN OR ADJACENT TO THE CHANNEL. UPON COMPLETION OR ABANDONMENT OF THE WORK, THE PERMITTEE AND/OR ITS AGENTS SHALL REMOVE AND DISPOSE OF IN A LAWFUL MANNER ALL EXCESS MATERIALS, DEBRIS, EQUIPMENT, SILT FENCES AND OTHER TEMPORARY SOIL EROSION AND SEDIMENT CONTROL DEVICES FROM ALL REGULATED AREAS.

2. THE PROPOSED ACTIVITIES SHALL NOT DISTURB MORE THAN 0.011 ACRES OF COASTAL WETLANDS ALLOWED BY THIS PERMIT.

3. IN ORDER TO PROTECT THE ANADROMOUS FISHERIES RESOURCES OF OVERPECK CREEK, ANY INSTREAM SEDIMENT GENERATING ACTIVITIES WITHIN THE STATE OPEN WATERS ON SITE ARE PROHIBITED BETWEEN **APRIL 1 TO JUNE 30** OF EACH YEAR. THE DEPARTMENT RESERVES THE RIGHT TO SUSPEND ALL REGULATED ACTIVITIES ON SITE SHOULD IT BE DETERMINED THAT THE APPLICANT HAS NOT TAKEN PROPER PRECAUTIONS TO ENSURE CONTINUOUS COMPLIANCE WITH THIS CONDITION.

4. ALL DEMOLITION MATERIALS MUST BE DISPOSED OF AT AN APPROVED SITE. THE PERMITTEE IS ADVISED TO CONTACT MR. HUGH CARBERRY OF THE DIVISION OF FISH AND WILDLIFE•S ARTIFICIAL REEF PROGRAM AT 609-784-2022 FOR THE DISPOSAL OF UNCONTAMINATED CONCRETE AND ASPHALT FREE RUBBLE WHICH AN BE UTILIZED TO BUILD ARTIFICIAL REEFS IN THE OCEAN. UNDER NO CIRCUMSTANCE SHOULD MATERIAL BE DISPOSED OF IN WETLANDS, STATE OPEN WATERS, OR OTHER ENVIRONMENTALLY SENSITIVE AREAS.

5. ALL FOUNDATIONS, SLABS, FOOTINGS AND WALLS OF THE PUMP STATION SHALL BE DESIGNED TO RESIST UPLIFT AND LATERAL LOADS ASSOCIATED WITH HYDROSTATIC PRESSURE RESULTING FROM FLOODING TO THE DESIGN FLOOD ELEVATION OF 9 FEET NGVD. FURTHERMORE, ALL STRUCTURAL COMPONENTS SHALL BE DESIGNED TO RESIST HYDRODYNAMIC FORCES RESULTING FROM THE DESIGN FLOOD. COMPLIANCE WITH THIS CONDITION SHALL BE DETERMINED BY THE MUNICIPAL CONSTRUCTION OFFICIAL.

6. ALL ACTIVITIES AUTHORIZED BY THIS PERMIT SHALL BE COMPLETED WITHIN FIVE YEARS OF THE SEPTEMBER 22 2008. AT THAT TIME, THIS APPROVAL, IF NOT PREVIOUSLY REVOKED SHALL AUTOMATICALLY BECOME NULL AND VOID, AND NONE OF THE ACTIVITIES REFERENCED HEREIN MAY COMMENCE OR CONTINUE UNTIL A NEW APPROVAL HAS BEEN GRANTED BY THE DEPARTMENT.

7. ALL WETLAND AND WETLAND TRANSITION AREAS DISTURBED FOR ACCESS MUST BE VEGETATED UPON COMPLETION OF THE ACTIVITY. THE DISTURBED WETLAND SHOULD BE ALLOWED TO NATURALLY RE-VEGETATE, HOWEVER, IF IT IS NECESSARY TO PREVENT EROSION, THE AREA MAYBE SEEDED WITH WETLAND SEED MIXTURE TO STABILIZE THE GROUND UNTIL NATURAL VEGETATION RE-ESTABLISHES. RE-VEGETATION WITH NATIVE SPECIES IS REQUIRED ONLY WHEN DISTURBANCES WITHIN THE WORK AREA HAVE RESULTED IN DESTRUCTION OF VEGETATION AND DISTURBANCE TO THE SOIL, WHICH WOULD PRECLUDE NATURAL RE-VEGETATION WITHIN ON GROWING SEASON.

8. ALL ACTIVITIES APPROVED BY THIS PERMIT SHALL BE PERFORMED UNDER THE SUPERVISION AND DIRECTION OF A PROFESSIONAL ENGINEER LICENSED IN THE STATE OF NEW JERSEY, AND SHALL BE UNDERTAKEN USING THE BEST MANAGEMENT PRACTICES AVAILABLE. FURTHERMORE, THE SITE SHALL BE SUBJECT TO INSPECTION AT ANY TIME BY REPRESENTATIVES OF THE DEPARTMENT TO ENSURE THE CONTINUOUS APPLICATION OF THE PROVISIONS OF THIS PERMIT.

9. THE PERMITTEE SHALL MONITOR ALL SOIL EROSION AND SEDIMENT CONTROL DEVICES TO ENSURE THAT SEDIMENT RELEASE FROM DECANTED OR FILTERED WATER IS NEAR ZERO PRIOR TO BEING DISCHARGED INTO WETLANDS OR STATE OPEN WATERS.

REGULATED MATERIAL GENERAL NOTES

1. SOILS IN AREAS WHICH ARE SHOWN TO CONTAIN HISTORIC FILL MUST BE MANAGED IN ACCORDANCE WITH THE SPECIFICATIONS FOR THE EXCAVATION OF REGULATED MATERIAL (SECTION 202.03.04). IN ACCORDANCE WITH STANDARD CONSTRUCTION PRACTICES, EXCAVATED SOILS IN AREAS CONTAINING HISTORIC FILL MAY BE BACKFILLED TO THE EXTENT POSSIBLE AT THEIR ORIGINAL LOCATION. EXCESS SOILS SHALL BE PROPERLY STOCKPILED AND CHARACTERIZED FOR OFF-SITE DISPOSAL AT A LICENSED FACILITY IN ACCORDANCE WITH SUBSECTIONS 202.03.07 AND 202.03.08.

2. ALL STORM AND GROUND WATERS REMOVED FROM EXCAVATIONS IN AREAS CONTAINING HISTORIC FILL SHALL BE CONSIDERED CONTAMINATED AND DIRECTED TO TEMPORARILY EXCAVATED DEWATERING BASINS OR PERCOLATION TRENCHES. NO GROUNDWATER DISCHARGE WILL BE PERMITTED TO ANY SURFACE WATER BODY OR STORM SEWER SYSTEM.

3. EXCAVATED SOIL CONTAINING FREE PRODUCT, PETROLEUM STAINING, OR PETROLEUM ODORS SHALL BE STOCKPILED AND SAMPLED FOR OFF-SITE DISPOSAL.

4. A HESS SERVICE STATION ONCE OPERATED ON BLCOK 5.01, LOT 8.01 (FORMERLY LOTS 5 & 11). SAMPLING INVESTIGATIONS BY THE RESPONSIBLE PARTY FOUND THAT GROUNDWATER BENEATH THE SITE HAD SIGNIFICANT VOLATILE ORGANIC CONTAMINATION. THE CONTRACTOR SHOULD BE AWARE THAT EXCAVATION ON AND NEAR THIS PROPERTY MAY ENCOUNTER GROUNDWATER CONTAMINATION BEYOND WHAT WOULD BE EXPECTED FROM TYPICAL HISTORIC FILL.

PERMITS

PERMIT TYPE & FILE No.	ISSUED	EXPIRES	CONDITIONS (SEE ACTUAL PERMITS FOR ADDITIONAL CONDITIONS)
NJDEP FLOOD HAZARD AREA PERMIT NO. FHA080002 WATERFRONT DEVELOPMENT PERMIT NO. 0230-08-0005.1 WFD080001 WATER QUALITY CERTIFICATE PERMIT NO. WQC080001	9/22/2008	9/22/2013	SEE PERMIT CONDITIONS (1-8)

ENVIRONMENTAL NOTES AND COMMITMENTS

SCALE IN FEET

30' 20' 10' 0 30' 60'

EP-1 / EP-6

NEW JERSEY DEPARTMENT OF TRANSPORTATION

ENVIRONMENTAL & SOIL EROSION & SEDIMENT CONTROL PLANS

ROUTE U.S. 46 LITTLE FERRY CIRCLE

CONTRACT NO. 069950373

PARSONS BRINCKERHOFF, INC.
CERTIFICATION OF AUTHORIZATION NO. 24GA28029800

MICHAEL D. HELMLINGER
N.J. PROFESSIONAL ENGINEER NO. 24GE03812100

PARSONS BRINCKERHOFF CADD DATA
OPERATOR | Detore | QUEUE | \\ompr\prt01\PRIPLO3_BW_IP
PLOT DATE | 08-MAR-2013 09:03
PENTABLE | 46Ifehx.tbl
DESIGN FILE | T:\20063\ep01.dgn

STATE	FEDERAL PROJECT NO.
N.J.	

BOROUGH OF LITTLE FERRY

COUNTY OF BERGEN

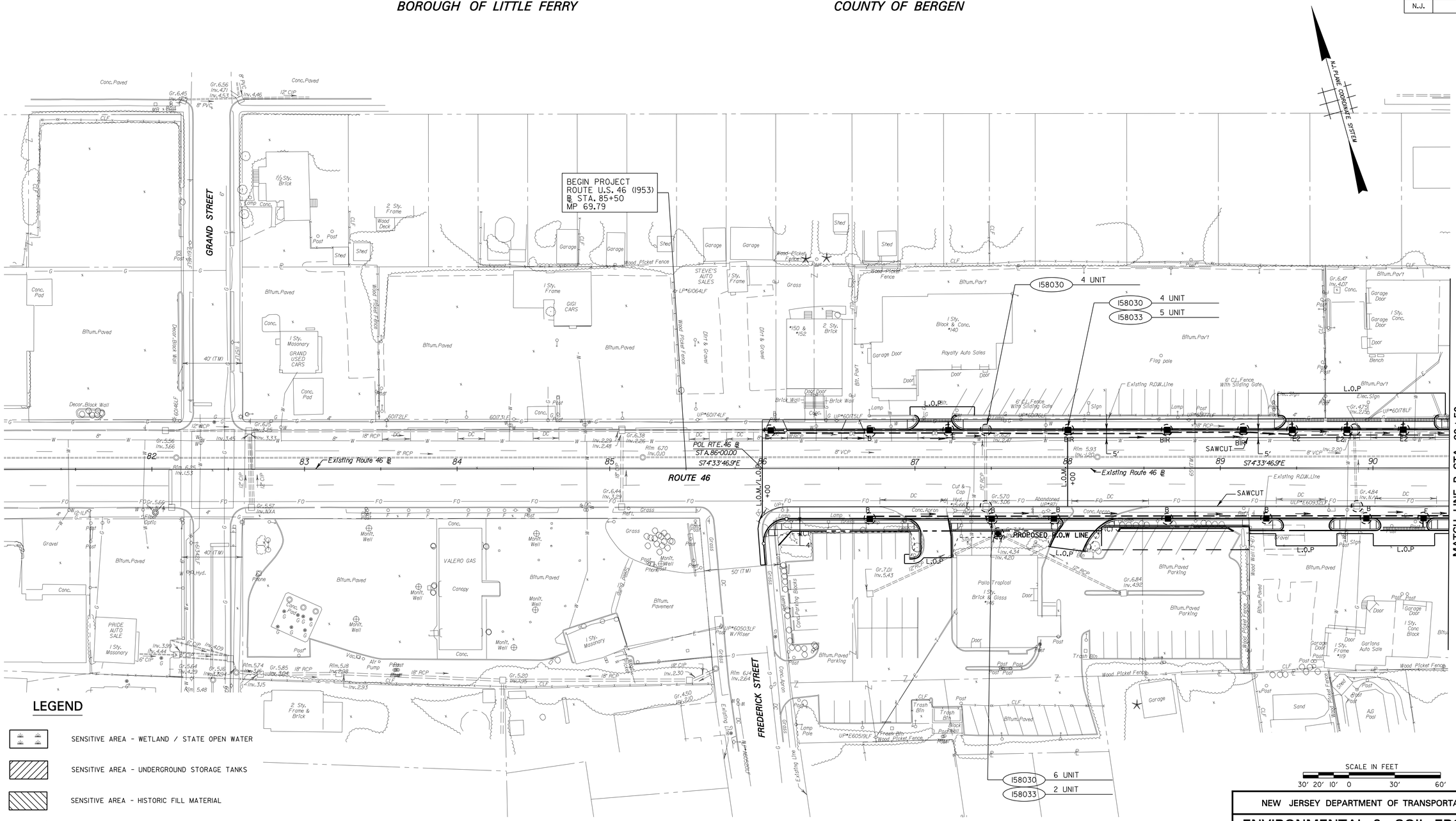

LEGEND

- SENSITIVE AREA - WETLAND / STATE OPEN WATER
- SENSITIVE AREA - UNDERGROUND STORAGE TANKS
- SENSITIVE AREA - HISTORIC FILL MATERIAL
- SENSITIVE AREA - HISTORIC FILL MATERIAL & UNDERGROUND STORAGE TANKS
- SECTION 4(f) PARKLAND RESOURCE
- HEAVY DUTY SILT FENCE, ORANGE
- INLET FILTER

ITEM NO.	TO BE CONSTRUCTED	CONTRACT QUANTITY
158030M	INLET FILTER TYPE 2, 2' X 4'	14 UNIT
158033M	INLET FILTER TYPE 2, 4' X 4'	7 UNIT

NOTE:

THE CONTRACTOR SHALL PERFORM "SOIL SAMPLING AND ANALYSIS, REGULATED" ON STOCKPILED EXCESS MATERIAL EXCAVATED FORM DESIGNATED HISTORIC FILL AREA.

NEW JERSEY DEPARTMENT OF TRANSPORTATION

ENVIRONMENTAL & SOIL EROSION & SEDIMENT CONTROL PLANS

ROUTE U.S. 46 LITTLE FERRY CIRCLE

CONTRACT NO. 069950373

PARSONS BRINCKERHOFF, INC.
CERTIFICATION OF AUTHORIZATION NO. 24GA28029800

MICHAEL D. HELMLINGER
N.J. PROFESSIONAL ENGINEER NO. 24GE03812100

21

PARSONS BRINCKERHOFF CADD DATA

OPERATOR	Detore	QUEUE	\\amprlpr+01\PRIPL03.BW\LP
PLOT DATE	08-MAR-2013 09:04		
PENTABLE	46lfehx.tbl		
DESIGN FILE	T:\20063\ep02.dgn		

STATE	FEDERAL PROJECT NO.
N.J.	

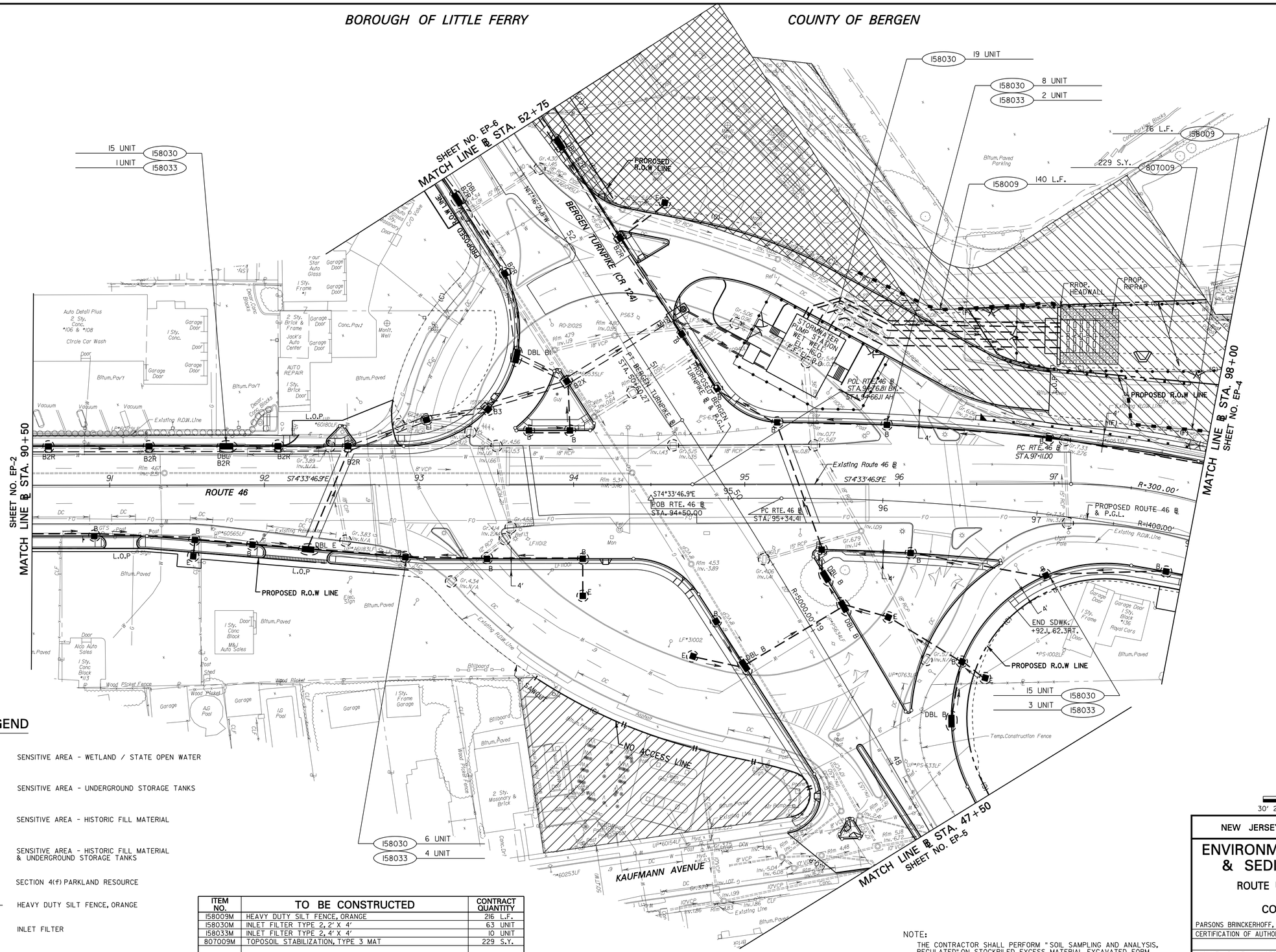

LEGEND

- SENSITIVE AREA - WETLAND / STATE OPEN WATER
- SENSITIVE AREA - UNDERGROUND STORAGE TANKS
- SENSITIVE AREA - HISTORIC FILL MATERIAL
- SENSITIVE AREA - HISTORIC FILL MATERIAL & UNDERGROUND STORAGE TANKS
- SECTION 4(f) PARKLAND RESOURCE
- HEAVY DUTY SILT FENCE, ORANGE
- INLET FILTER

ITEM NO.	TO BE CONSTRUCTED	CONTRACT QUANTITY
158009M	HEAVY DUTY SILT FENCE, ORANGE	216 L.F.
158030M	INLET FILTER TYPE 2, 2' X 4'	63 UNIT
158033M	INLET FILTER TYPE 2, 4' X 4'	10 UNIT
807009M	TOPOSOIL STABILIZATION, TYPE 3 MAT	229 S.Y.

NOTE:
THE CONTRACTOR SHALL PERFORM "SOIL SAMPLING AND ANALYSIS, REGULATED" ON STOCKPILED EXCESS MATERIAL EXCAVATED FORM DESIGNATED HISTORIC FILL AREA.

SCALE IN FEET
30' 20' 10' 0 30' 60'

EP-3
EP-6

NEW JERSEY DEPARTMENT OF TRANSPORTATION

ENVIRONMENTAL & SOIL EROSION & SEDIMENT CONTROL PLANS

ROUTE U.S. 46 LITTLE FERRY CIRCLE

CONTRACT NO. 069950373

PARSONS BRINCKERHOFF, INC.
CERTIFICATION OF AUTHORIZATION NO. 24GA28029800

MICHAEL D. HELMLINGER
N.J. PROFESSIONAL ENGINEER NO. 24GE03812100

22

PARSONS BRINCKERHOFF CADD DATA

OPERATOR	Detore	QUEUE	\\ampirport01\PRIPLO3.BW\P
PLOT DATE	08-MAR-2013 09:04		
PENTABLE	46ifetx.tbl		
DESIGN FILE	T:\20063\ep03.dgn		

STATE	FEDERAL PROJECT NO.
N.J.	

BOROUGH OF LITTLE FERRY

COUNTY OF BERGEN

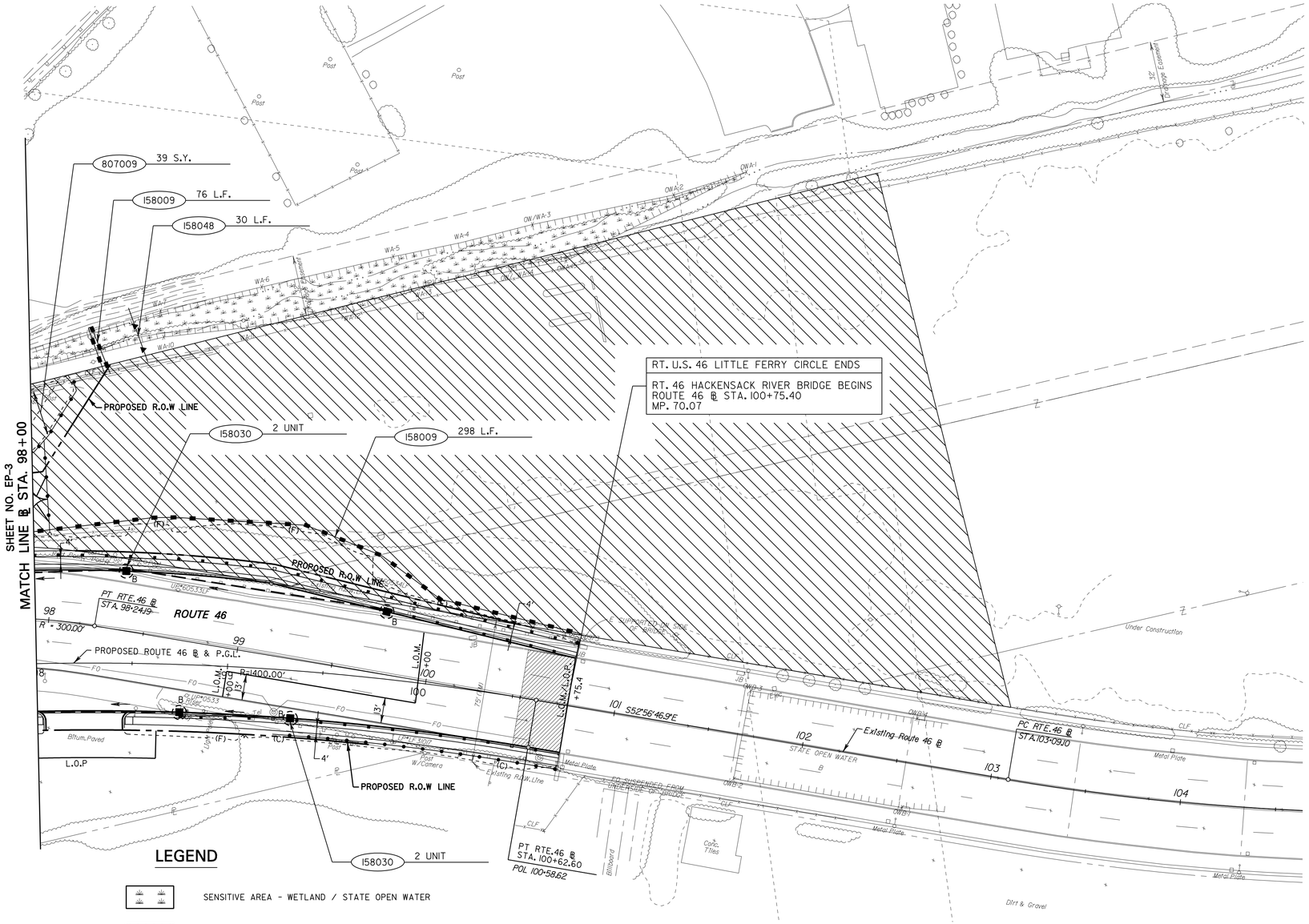

LEGEND

- SENSITIVE AREA - WETLAND / STATE OPEN WATER
- SENSITIVE AREA - UNDERGROUND STORAGE TANKS
- SENSITIVE AREA - HISTORIC FILL MATERIAL
- SENSITIVE AREA - HISTORIC FILL MATERIAL & UNDERGROUND STORAGE TANKS
- SECTION 4(f) PARKLAND RESOURCE
- HEAVY DUTY SILT FENCE, ORANGE
- INLET FILTER

ITEM NO.	TO BE CONSTRUCTED	CONTRACT QUANTITY
158009M	HEAVY DUTY SILT FENCE, ORANGE	374 L.F.
158030M	INLET FILTER TYPE 2, 2' X 4'	4 UNIT
158048M	FLOATING TURBIDITY BARRIER, TYPE 3	30 L.F.
807009M	TOPOSOIL STABILIZATION, TYPE 3 MAT	39 S.Y.

NOTE:

THE CONTRACTOR SHALL PERFORM "SOIL SAMPLING AND ANALYSIS, REGULATED" ON STOCKPILED EXCESS MATERIAL EXCAVATED FORM DESIGNATED HISTORIC FILL AREA.

SCALE IN FEET

30' 20' 10' 0 30' 60'

EP-4 / EP-6

NEW JERSEY DEPARTMENT OF TRANSPORTATION

ENVIRONMENTAL & SOIL EROSION & SEDIMENT CONTROL PLANS

ROUTE U.S. 46 LITTLE FERRY CIRCLE

CONTRACT NO. 069950373

PARSONS BRINCKERHOFF, INC.

CERTIFICATION OF AUTHORIZATION NO. 24GA28029800

MICHAEL D. HELMLINGER

N.J. PROFESSIONAL ENGINEER NO. 24GE03812100

23

PARSONS BRINCKERHOFF CADD DATA

OPERATOR	Detore	QUEUE	\\ampr1pr-f01\PRIPL03_BW_IP
PLOT DATE	08-MAR-2013 09:04		
PENTABLE	46lfenx.tbl		
DESIGN FILE	T:\20063\ep04.dgn		

STATE	FEDERAL PROJECT NO.
N.J.	

BOROUGH OF LITTLE FERRY

COUNTY OF BERGEN

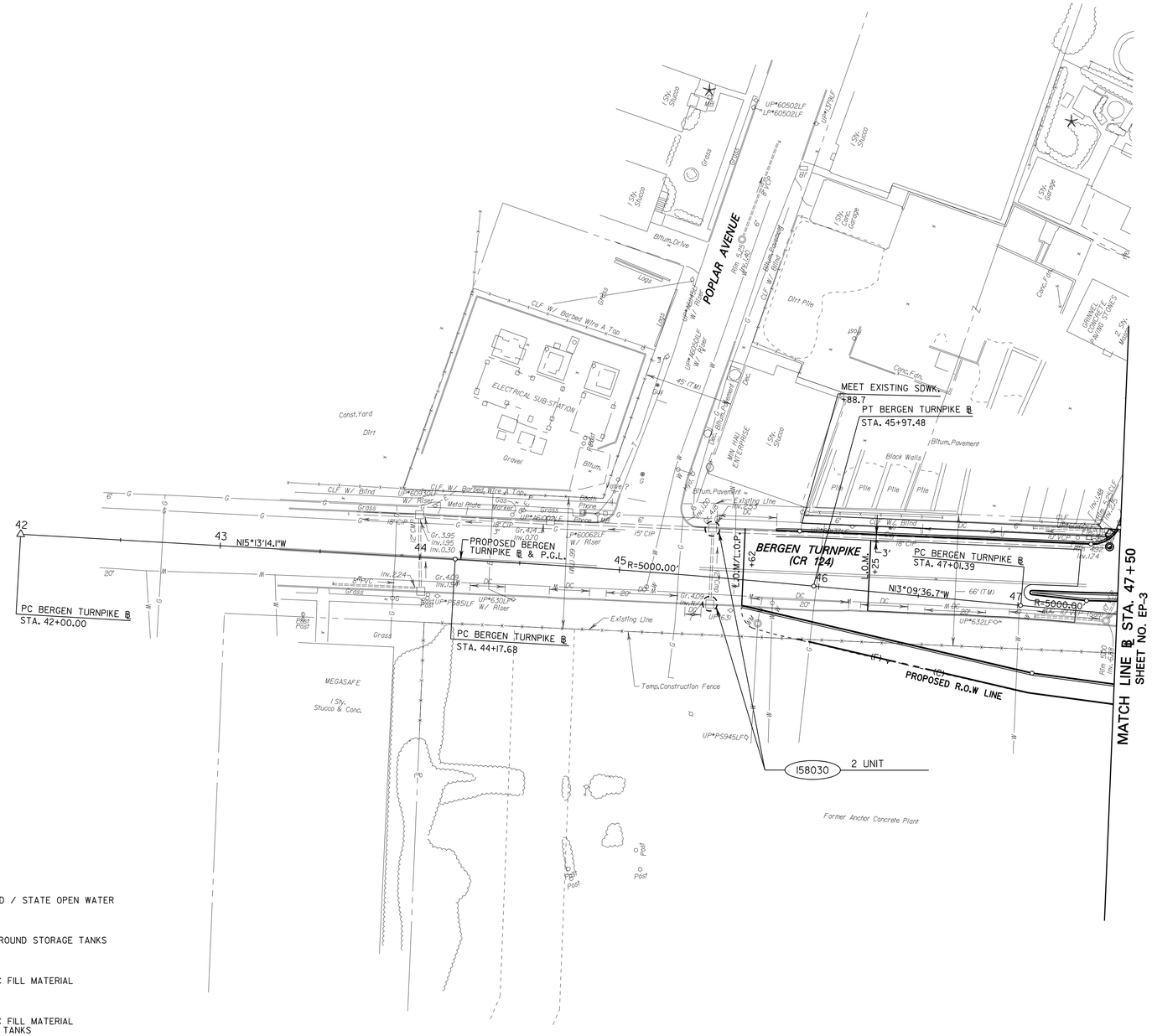

LEGEND

- SENSITIVE AREA - WETLAND / STATE OPEN WATER
- SENSITIVE AREA - UNDERGROUND STORAGE TANKS
- SENSITIVE AREA - HISTORIC FILL MATERIAL
- SENSITIVE AREA - HISTORIC FILL MATERIAL & UNDERGROUND STORAGE TANKS
- SECTION 4(f) PARKLAND RESOURCE
- HEAVY DUTY SILT FENCE, ORANGE
- INLET FILTER

ITEM NO.	TO BE CONSTRUCTED	CONTRACT QUANTITY
158030M	INLET FILTER TYPE 2, 2' X 4'	2 UNIT

NOTE:

THE CONTRACTOR SHALL PERFORM "SOIL SAMPLING AND ANALYSIS, REGULATED" ON STOCKPILED EXCESS MATERIAL EXCAVATED FORM DESIGNATED HISTORIC FILL AREA.

SCALE IN FEET

30' 20' 10' 0 30' 60'

EP-5 / EP-6

NEW JERSEY DEPARTMENT OF TRANSPORTATION

ENVIRONMENTAL & SOIL EROSION & SEDIMENT CONTROL PLANS

ROUTE U.S. 46 LITTLE FERRY CIRCLE

CONTRACT NO. 069950373

PARSONS BRINCKERHOFF, INC.

CERTIFICATION OF AUTHORIZATION NO. 24GA28029800

MICHAEL D. HELMLINGER

N.J. PROFESSIONAL ENGINEER NO. 24GE03812100

PARSONS BRINCKERHOFF CADD DATA

OPERATOR	Detore	QUEUE	\\ampr1pr+01\PRIPL03_BW.IP
PLOT DATE	08-MAR-2013 09:04		
PENTABLE	46lfenx.tbl		
DESIGN FILE	T:\20063\ep05.dgn		

STATE	FEDERAL PROJECT NO.
N.J.	

BOROUGH OF LITTLE FERRY

COUNTY OF BERGEN

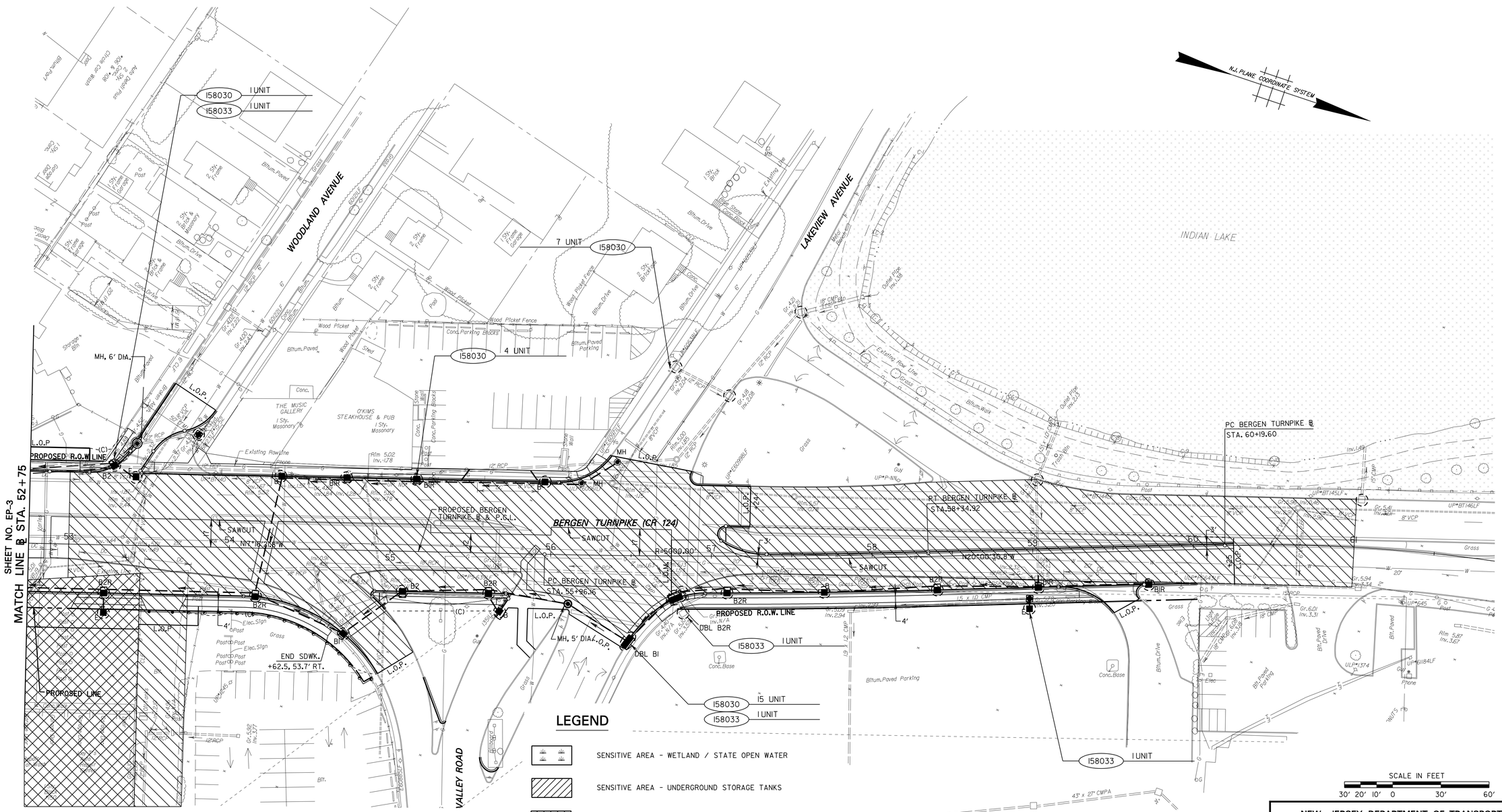

EP-6
EP-6

LEGEND

- SENSITIVE AREA - WETLAND / STATE OPEN WATER
- SENSITIVE AREA - UNDERGROUND STORAGE TANKS
- SENSITIVE AREA - HISTORIC FILL MATERIAL
- SENSITIVE AREA - HISTORIC FILL MATERIAL & UNDERGROUND STORAGE TANKS
- SECTION 4(f) PARKLAND RESOURCE
- HEAVY DUTY SILT FENCE, ORANGE
- INLET FILTER

ITEM NO.	TO BE CONSTRUCTED	CONTRACT QUANTITY
158030M	INLET FILTER TYPE 2, 2' X 4'	27 UNIT
158033M	INLET FILTER TYPE 2, 4' X 4'	4 UNIT

NOTE:
THE CONTRACTOR SHALL PERFORM "SOIL SAMPLING AND ANALYSIS, REGULATED" ON STOCKPILED EXCESS MATERIAL EXCAVATED FORM DESIGNATED HISTORIC FILL AREA.

NEW JERSEY DEPARTMENT OF TRANSPORTATION

ENVIRONMENTAL & SOIL EROSION & SEDIMENT CONTROL PLANS

ROUTE U.S. 46 LITTLE FERRY CIRCLE

CONTRACT NO. 069950373

PARSONS BRINCKERHOFF, INC.
CERTIFICATION OF AUTHORIZATION NO. 24GA28029800

MICHAEL D. HELMLINGER
N.J. PROFESSIONAL ENGINEER NO. 24GE03812100

PARSONS BRINCKERHOFF CADD DATA

OPERATOR	Detore	QUEUE	\\amprlpr+01\PRIPL03.BWLP
PLOT DATE	08-MAR-2013 09:04		
PENTABLE	46lfehx.tbl		
DESIGN FILE	T:\20063\ep06.dgn		

STATE	FEDERAL PROJECT NO.
N.J.	

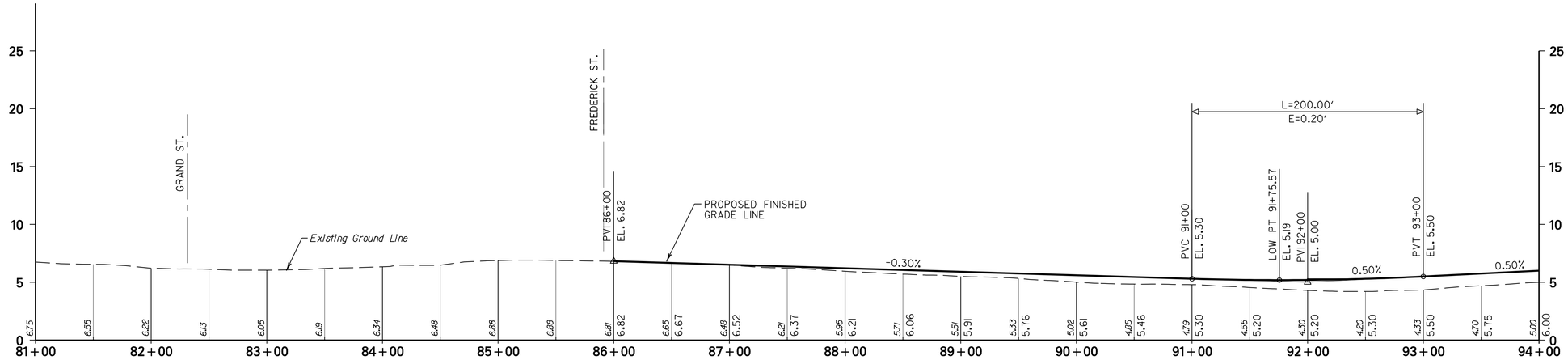

ROUTE 46

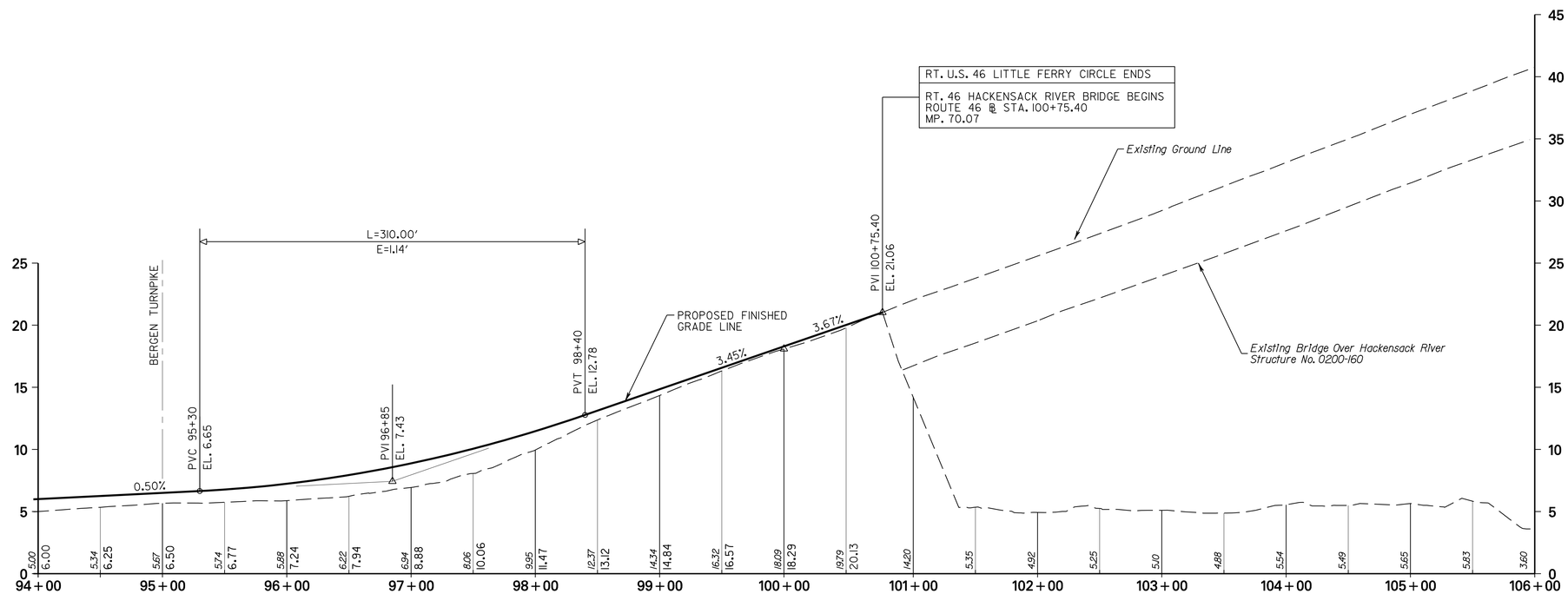

ROUTE 46

VERT. SCALE IN FEET 5' 0 5' 10'

HORIZ. SCALE IN FEET 50' 0 50' 100'

P-1 / P-2

NEW JERSEY DEPARTMENT OF TRANSPORTATION

PROFILES

ROUTE U.S. 46 LITTLE FERRY CIRCLE

CONTRACT NO. 069950373

PARSONS BRINCKERHOFF, INC.
CERTIFICATION OF AUTHORIZATION NO. 24GA28029800

MICHAEL D. HELMLINGER
N.J. PROFESSIONAL ENGINEER NO. 24GE03812100

NOTE:

E = DIFFERENCE BETWEEN THE P.V.I. ELEVATION AND THE VERTICAL CURVE ELEVATION AT THE P.V.I. STATION.

PARSONS BRINCKERHOFF CADD DATA

OPERATOR	Datore	QUEUE	\\ampr1pr10\PRIPL03.BW\P
PLOT DATE	08-MAR-2013 09:04		
PENTABLE	ehx.tbl		
DESIGN FILE	T:\20063\pr01.dgn		

STATE	FEDERAL PROJECT NO.
N.J.	

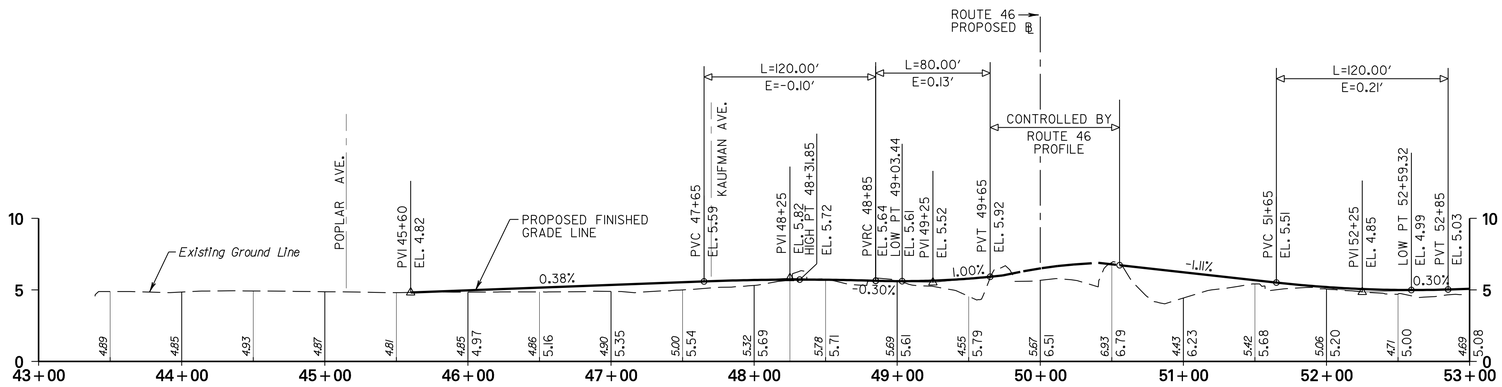

BERGEN TURNPIKE

DESIGN SPEED=40 MPH (NORTH OF RT 46)
35 MPH (SOUTH OF RT 46)

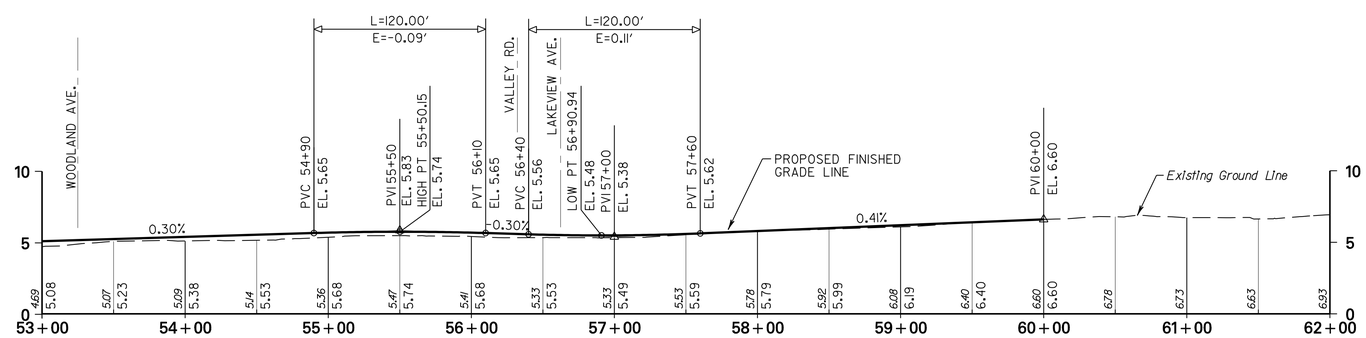

BERGEN TURNPIKE

DESIGN SPEED=40 MPH

NOTE:

E=DIFFERENCE BETWEEN THE P.V.I. ELEVATION AND THE VERTICAL CURVE ELEVATION AT THE P.V.I. STATION.

VERT. SCALE IN FEET 5′ 0 5′ 10′

HORIZ. SCALE IN FEET 50′ 0 50′ 100′

P-2 / P-2

NEW JERSEY DEPARTMENT OF TRANSPORTATION

PROFILES

ROUTE U.S. 46 LITTLE FERRY CIRCLE

CONTRACT NO. 069950373

PARSONS BRINCKERHOFF, INC.
CERTIFICATION OF AUTHORIZATION NO. 24GA28029800

MICHAEL D. HELMLINGER
N.J. PROFESSIONAL ENGINEER NO. 24GE03812100

PARSONS BRINCKERHOFF CADD DATA

OPERATOR	Detore	QUEUE	\\ampr1pr-t01\PRIPL03_BW.IP
PLOT DATE	08-MAR-2013 09:04		
PENTABLE	ehx.tbl		
DESIGN FILE	T:\20063\pr02.dgn		

STATE	FEDERAL PROJECT NO.
N.J.	

BOROUGH OF LITTLE FERRY

COUNTY OF BERGEN

TIES			
POINT	REFERENCE BASELINE	BASELINE STATION	OFFSET
EXISTING ROUTE 46			
POL STA 80+00.00	SURVEY BASELINE 1	137+40.26	82.40
POL STA 94+76.81 (BK)	SURVEY BASELINE 1	152+08.71	-39.02
POL STA 94+66.11 (AH)			
PC STA 97+11.00	SURVEY BASELINE 1	154+52.44	-62.82
PT STA 98+24.19	SURVEY BASELINE 1	155+64.49	-52.56
POL STA 100+58.61	SURVEY BASELINE 1	157+89.79	12.22
PC STA 103+09.10	SURVEY BASELINE 1	160+30.52	81.43
PT STA 107+91.08	SURVEY BASELINE 1	165+07.66	124.83
POE STA 107+97.00	SURVEY BASELINE 1	165+13.56	124.30
PROPOSED ROUTE 46			
PT STA 94+50.00	SURVEY BASELINE 1	151+82.90	-27.45
PC STA 95+34.41	SURVEY BASELINE 1	152+66.91	-35.66
PT STA 100+62.61	SURVEY BASELINE 1	157+89.79	12.22
BERGEN TURNPIKE			
POB STA 42+00.00	SURVEY BASELINE 4	397+72.77	37.05
PC STA 44+17.68	SURVEY BASELINE 4	399+90.20	26.78
PT STA 45+97.48	SURVEY BASELINE 4	401+69.92	21.53
PC STA 47+01.39	SURVEY BASELINE 4	402+73.82	20.37
PT STA 50+60.27	SURVEY BASELINE 4	406+59.34	63.69
PC STA 55+96.16	SURVEY BASELINE 4	411+83.74	-0.47
PT STA 58+34.92	SURVEY BASELINE 4	414+23.20	-15.95
PC STA 60+19.60	SURVEY BASELINE 4	416+07.85	-19.11
PT STA 63+99.99	SURVEY BASELINE 4	419+80.31	46.02

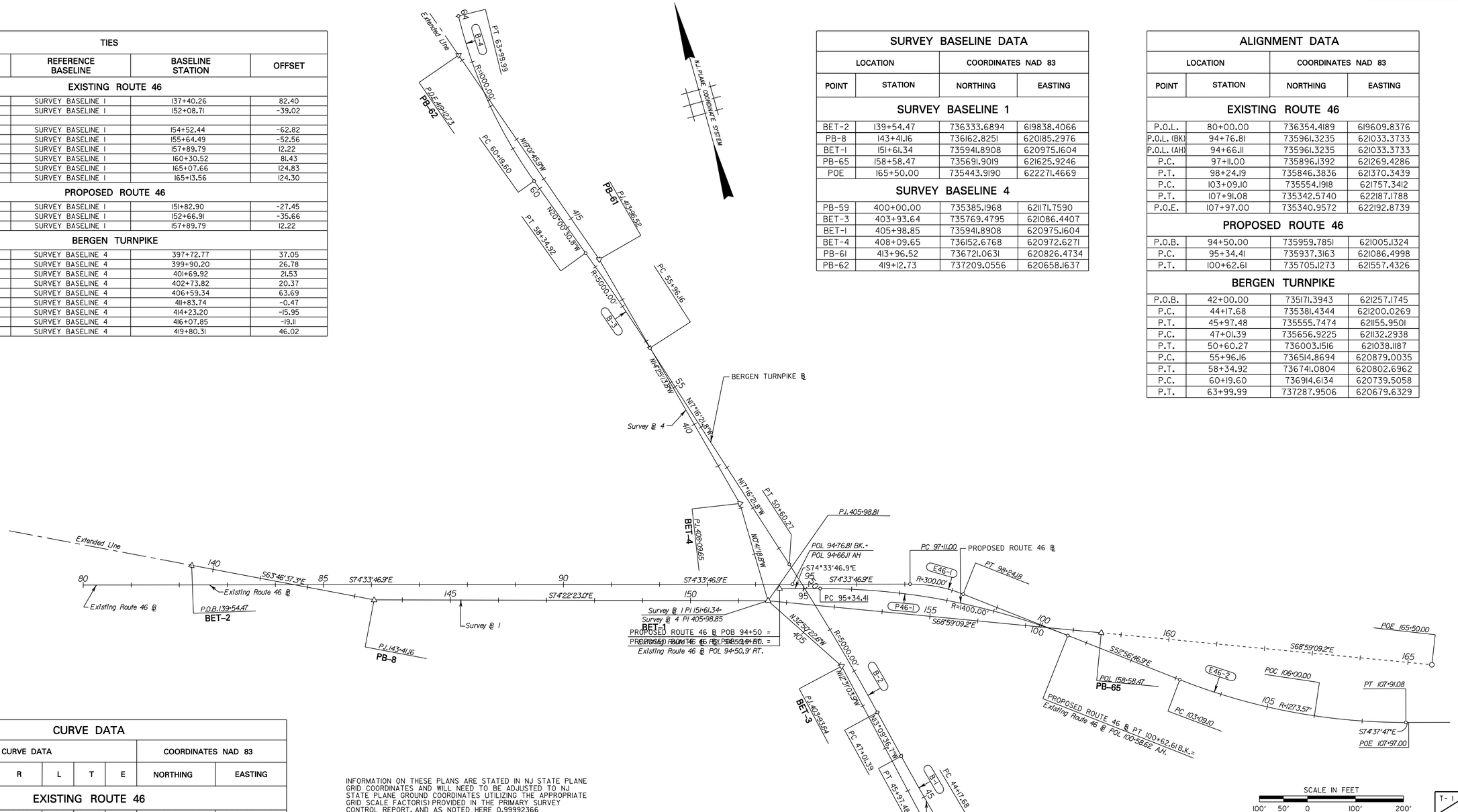

SURVEY BASELINE DATA			
LOCATION		COORDINATES NAD 83	
POINT	STATION	NORTHING	EASTING
SURVEY BASELINE 1			
BET-2	139+54.47	736333.6894	619838.4066
PB-8	143+41.16	736162.8251	620185.2976
BET-1	151+61.34	735941.8908	620975.1604
PB-65	158+58.47	735691.9019	621625.9246
POE	165+50.00	735443.9190	622271.4669
SURVEY BASELINE 4			
PB-59	400+00.00	735385.1968	621171.7590
BET-3	403+93.64	735769.4795	621086.4407
BET-1	405+98.85	735941.8908	620975.1604
BET-4	408+09.65	736152.6768	620972.6271
PB-61	413+96.52	736721.0631	620826.4734
PB-62	419+12.73	737209.0556	620658.1637

ALIGNMENT DATA			
LOCATION		COORDINATES NAD 83	
POINT	STATION	NORTHING	EASTING
EXISTING ROUTE 46			
P.O.L.	80+00.00	736354.4189	619609.8376
P.O.L. (BK)	94+76.81	735961.3235	621033.3733
P.O.L. (AH)	94+66.11	735961.3235	621033.3733
P.C.	97+11.00	735896.1392	621269.4286
P.T.	98+24.19	735846.3836	621370.3439
P.C.	103+09.10	735554.1918	621757.3412
P.T.	107+91.08	735342.5740	622187.1788
P.O.E.	107+97.00	735340.9572	622192.8739
PROPOSED ROUTE 46			
P.O.B.	94+50.00	735959.7851	621005.1324
P.C.	95+34.41	735937.3163	621086.4998
P.T.	100+62.61	735705.1273	621557.4326
BERGEN TURNPIKE			
P.O.B.	42+00.00	735171.3943	621257.1745
P.C.	44+17.68	735381.4344	621200.0269
P.T.	45+97.48	735555.7474	621155.9501
P.C.	47+01.39	735656.9225	621132.2938
P.T.	50+60.27	736003.1516	621038.1187
P.C.	55+96.16	736514.8694	620879.0035
P.T.	58+34.92	736741.0804	620802.6962
P.C.	60+19.60	736914.6134	620739.5058
P.T.	63+99.99	737287.9506	620679.6329

CURVE DATA							
CURVE DATA						COORDINATES NAD 83	
CURVE	Δ	R	L	T	E	NORTHING	EASTING
EXISTING ROUTE 46							
E46-1	21°-37'-00.0"	300.00	113.18	57.27	5.42	735606.9620	621189.5752
E46-2	21°-41'-00.0"	1273.57	481.98	243.91	23.15	736570.5922	622524.7465
PROPOSED ROUTE 46							
P46-1	21°-36'-59.0"	1400.00	528.19	267.27	25.28	734587.8229	620713.8505
BERGEN TURNPIKE							
B-1	2°-3'-37.7"	5000.00	179.81	89.91	0.81	736694.1143	626024.6379
B-2	4°-6'-45.1"	5000.00	358.89	179.52	3.22	734518.5496	616263.6075
B-3	2°-44'-09.4"	5000.00	238.76	119.40	1.43	735030.2714	616104.4910
B-4	21°-47'-42.5"	1000.00	380.40	192.53	18.36	737256.7752	621679.1469

INFORMATION ON THESE PLANS ARE STATED IN NJ STATE PLANE GRID COORDINATES AND WILL NEED TO BE ADJUSTED TO NJ STATE PLANE GROUND COORDINATES UTILIZING THE APPROPRIATE GRID SCALE FACTOR(S) PROVIDED IN THE PRIMARY SURVEY CONTROL REPORT, AND AS NOTED HERE 0.99992366

HORIZONTAL DATUM

NEW JERSEY GRID COORDINATE SYSTEM
NORTH AMERICAN DATUM 1983

GRID SCALE

MEAN GRID SCALE FACTOR: 0.99992366

VERTICAL DATUM

NORTH AMERICAN VERTICAL DATUM 1988

GENERAL NOTES:

1. PLANS FOR THE "ROUTE U.S. 46 LITTLE FERRY CIRCLE" (PART A) ARE STATED IN NJ STATE PLANE GRID COORDINATES. CONTROLS SPECIFIED WITHIN THE TIE SHEETS OF PART A SHALL GOVERN CONSTRUCTION OF THIS PORTION OF THE PROJECT. PLANS FOR THE "ROUTE 46 HACKENSACK RIVER BRIDGE" (PART B) ARE STATED IN NJ STATE PLANE GROUND COORDINATES. CONTROLS SPECIFIED WITHIN THE TIE SHEETS OF PART B SHALL GOVERN CONSTRUCTION OF THIS PORTION OF THE PROJECT.

SCALE IN FEET
100' 50' 0 100' 200'

T-1
T-2

NEW JERSEY DEPARTMENT OF TRANSPORTATION

TIES

ROUTE U.S. 46 LITTLE FERRY CIRCLE

CONTRACT NO. 069950373

PARSONS BRINCKERHOFF, INC.
CERTIFICATION OF AUTHORIZATION NO. 24GA28029800

MICHAEL D. HELMLINGER
N.J. PROFESSIONAL ENGINEER NO. 24GE03812100

PARSONS BRINCKERHOFF CADD DATA
OPERATOR Detore QUEUE \\ampr1pr-t01\PRIPLO3_BW.IP
PLOT DATE 08-MAR-2013 09:05
PENTABLE ehx.tbl
DESIGN FILE T:\20063\t101.dgn

STATE	FEDERAL PROJECT NO.
N.J.	

BOROUGH OF LITTLE FERRY

COUNTY OF BERGEN

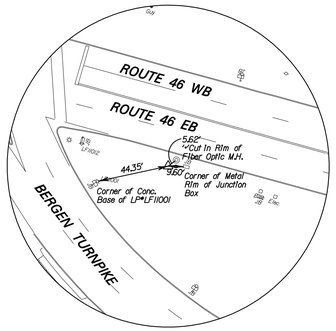

BET–1
D.O.T. MONUMENT
SURVEY BASELINE 1 STA 151+61.34
SURVEY BASELINE 4 STA 405+98.85
N 735941.8908
E 620975.1604
ELEV 6.08′

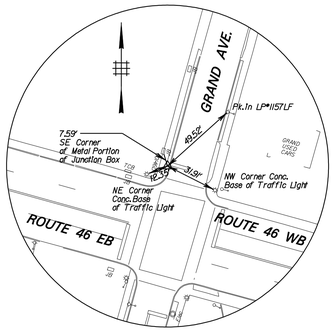

BET–2
DISC IN IRON PIPE
SURVEY BASELINE 1 STA 139+54.47
N 736333.6894
E 619838.4066

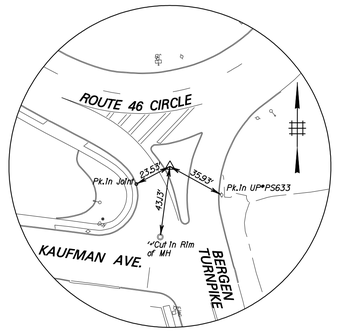

BET–3
MONUMENT IN BOX
SURVEY BASELINE 4 STA 403+93.64
N 735769.4795
E 621086.4407
ELEV 5.50′

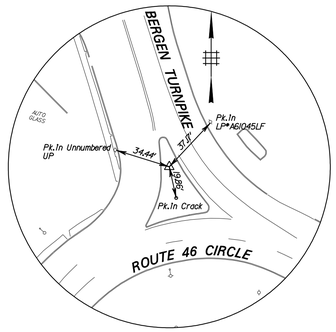

BET–4
MONUMENT IN CIRON BOX
SURVEY BASELINE 4 STA 408+09.65
N 736152.6768
E 620972.6271
ELEV 4.95′

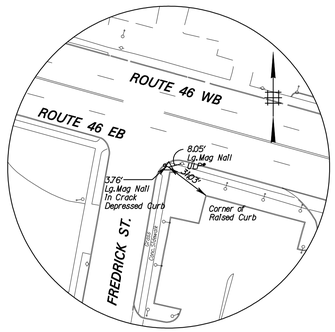

PB–8
DOCK SPIKE
SURVEY BASELINE 1 STA 143+41.16
N 736162.8251
E 620185.2976
ELEV 6.12′

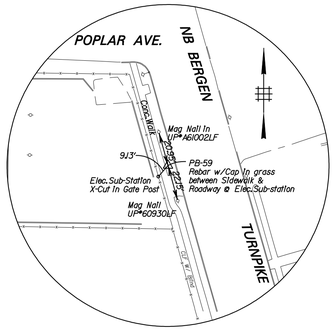

PB–59
REBAR W/CAP
SURVEY BASELINE 4 STA 400+00.00
N 735385.1968
E 621171.7590
ELEV 4.77′

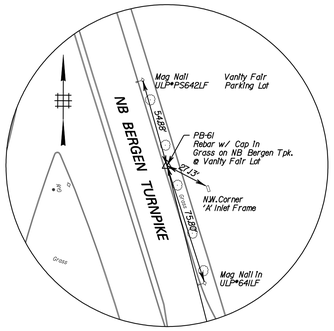

PB–61
REBAR W/CAP
SURVEY BASELINE 4 STA 413+96.52
N 736721.0631
E 620826.4734
ELEV 6.28′

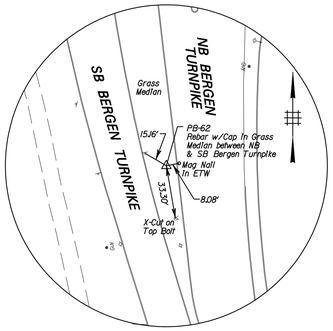

PB–62
REBAR W/CAP
SURVEY BASELINE 4 STA 419+12.73
N 737209.0556
E 620658.1637
ELEV 7.48′

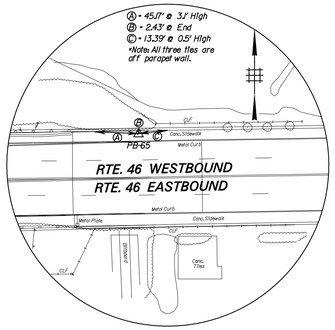

PB–65
MAG NAIL IN SIDEWALK
SURVEY BASELINE 1 STA 158+58.47
N 735691.9019
E 621625.9246
ELEV 23.04′

GENERAL NOTES:

1. PLANS FOR THE "ROUTE U.S. 46 LITTLE FERRY CIRCLE" (PART A) ARE STATED IN NJ STATE PLANE GRID COORDINATES. CONTROLS SPECIFIED WITHIN THE TIE SHEETS OF PART A SHALL GOVERN CONSTRUCTION OF THIS PORTION OF THE PROJECT. PLANS FOR THE "ROUTE 46 HACKENSACK RIVER BRIDGE" (PART B) ARE STATED IN NJ STATE PLANE GROUND COORDINATES. CONTROLS SPECIFIED WITHIN THE TIE SHEETS OF PART B SHALL GOVERN CONSTRUCTION OF THIS PORTION OF THE PROJECT.

INFORMATION ON THESE PLANS ARE STATED IN NJ STATE PLANE GRID COORDINATES AND WILL NEED TO BE ADJUSTED TO NJ STATE PLANE GROUND COORDINATES UTILIZING THE APPROPRIATE GRID SCALE FACTOR(S) PROVIDED IN THE PRIMARY SURVEY CONTROL REPORT, AND AS NOTED HERE 0.99992366

HORIZONTAL DATUM

NEW JERSEY GRID COORDINATE SYSTEM
NORTH AMERICAN DATUM 1983

VERTICAL DATUM

NORTH AMERICAN VERTICAL DATUM 1988

SCALE IN FEET
100′ 50′ 0 100′ 200′

T-2 / T-2

NEW JERSEY DEPARTMENT OF TRANSPORTATION

TIES

ROUTE U.S. 46 LITTLE FERRY CIRCLE

CONTRACT NO. 069950373

PARSONS BRINCKERHOFF, INC.
CERTIFICATION OF AUTHORIZATION NO. 24GA28029800

MICHAEL D. HELMLINGER
N.J. PROFESSIONAL ENGINEER NO. 24GE03812100

PARSONS BRINCKERHOFF CADD DATA

OPERATOR	Detore	QUEUE	\\ampirpr10\PRIP.03_BW.IP
PLOT DATE	08-MAR-2013 09:05		
PENTABLE	ehx.tbl		
DESIGN FILE	T:\20063\t102.dgn		

STATE	FEDERAL PROJECT NO.
N.J.	

BOROUGH OF LITTLE FERRY

COUNTY OF BERGEN

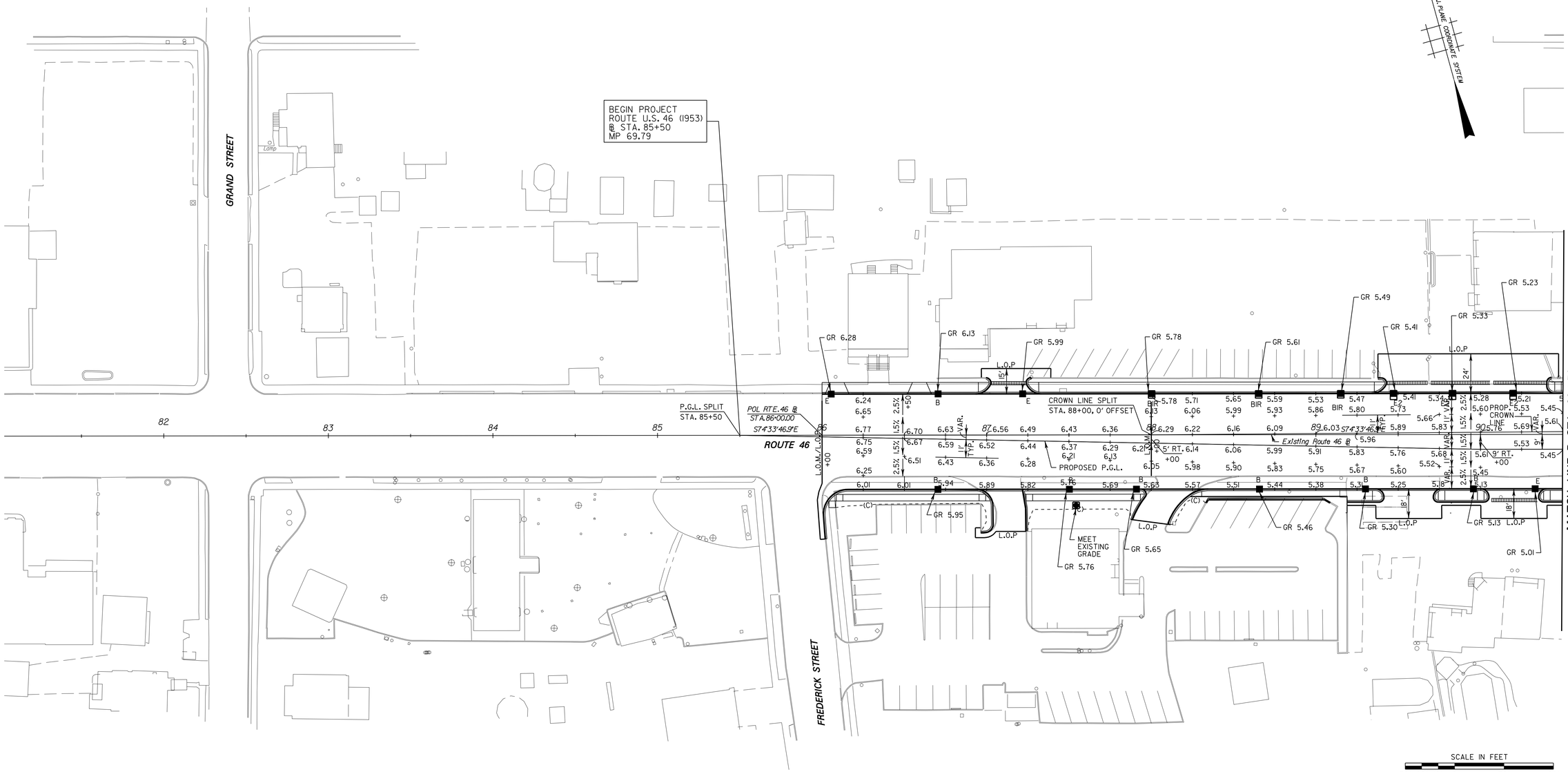

SCALE IN FEET

30' 20' 10' 0 30' 60'

G-1 / G-5

NEW JERSEY DEPARTMENT OF TRANSPORTATION

GRADES

ROUTE U.S. 46 LITTLE FERRY CIRCLE

CONTRACT NO. 069950373

PARSONS BRINCKERHOFF, INC.

CERTIFICATION OF AUTHORIZATION NO. 24GA28029800

MICHAEL D. HELMLINGER

N.J. PROFESSIONAL ENGINEER NO. 24GE03812100

30

PARSONS BRINCKERHOFF CADD DATA

OPERATOR	Detore	QUEUE	\\ampr1pr10\PRIPL03_BW_IP
PLOT DATE	08-MAR-2013 09:05		
PENTABLE	ehx.tbl		
DESIGN FILE	T:\20063\gr01.dgn		

STATE	FEDERAL PROJECT NO.
N.J.	

BOROUGH OF LITTLE FERRY

COUNTY OF BERGEN

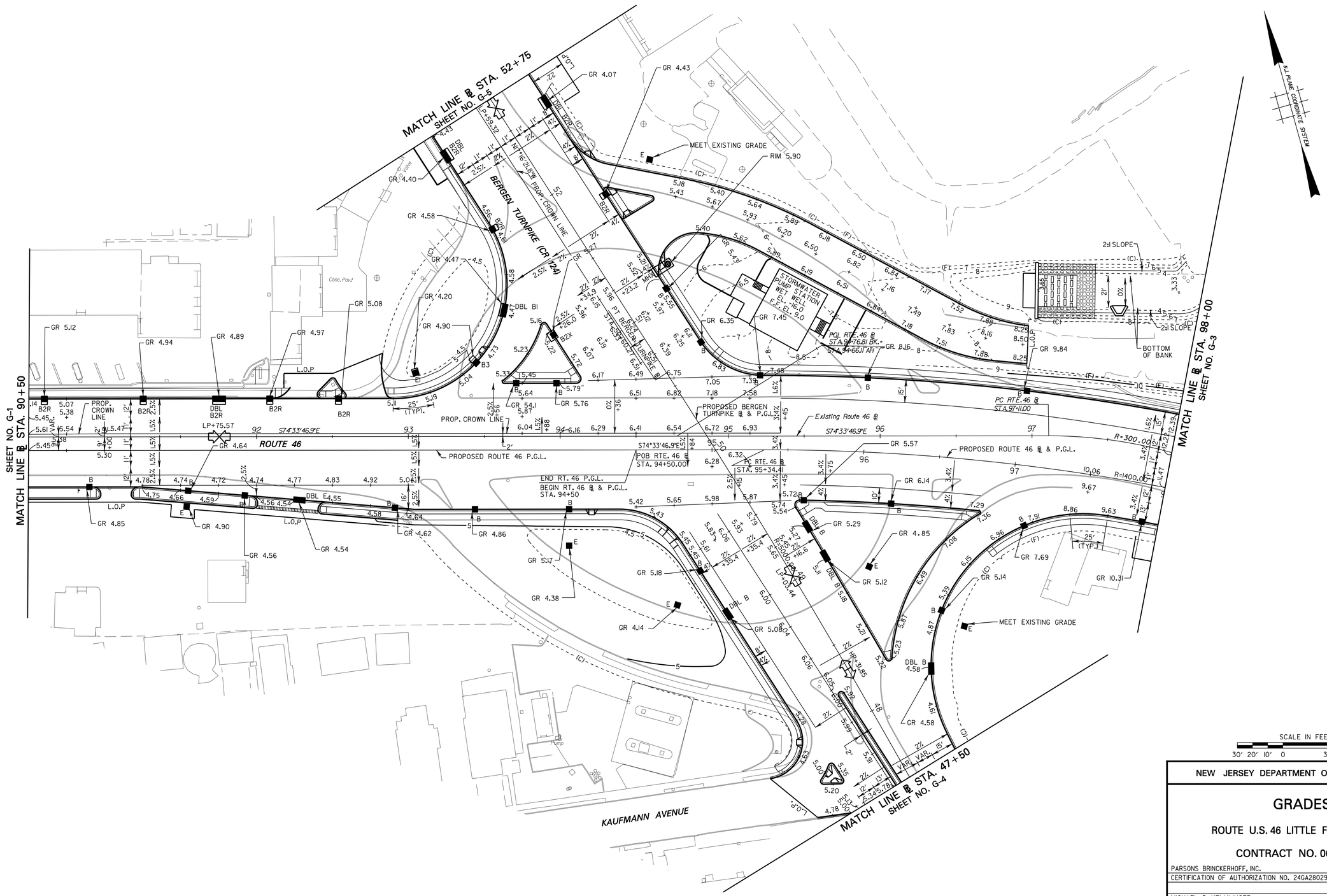

SCALE IN FEET

30' 20' 10' 0 30' 60'

G-2 / G-5

NEW JERSEY DEPARTMENT OF TRANSPORTATION

GRADES

ROUTE U.S. 46 LITTLE FERRY CIRCLE

CONTRACT NO. 069950373

PARSONS BRINCKERHOFF, INC.
CERTIFICATION OF AUTHORIZATION NO. 24GA28029800

MICHAEL D. HELMLINGER
N.J. PROFESSIONAL ENGINEER NO. 24GE03812100

31

PARSONS BRINCKERHOFF CADD DATA

OPERATOR	Dstore	QUEUE	\\ampr1pr10\PRIPL03_BW_IP
PLOT DATE	08-MAR-2013 09:05		
PENTABLE	ehx.tbl		
DESIGN FILE	T:\20063\gr02.dgn		

STATE	FEDERAL PROJECT NO.
N.J.	

BOROUGH OF LITTLE FERRY

COUNTY OF BERGEN

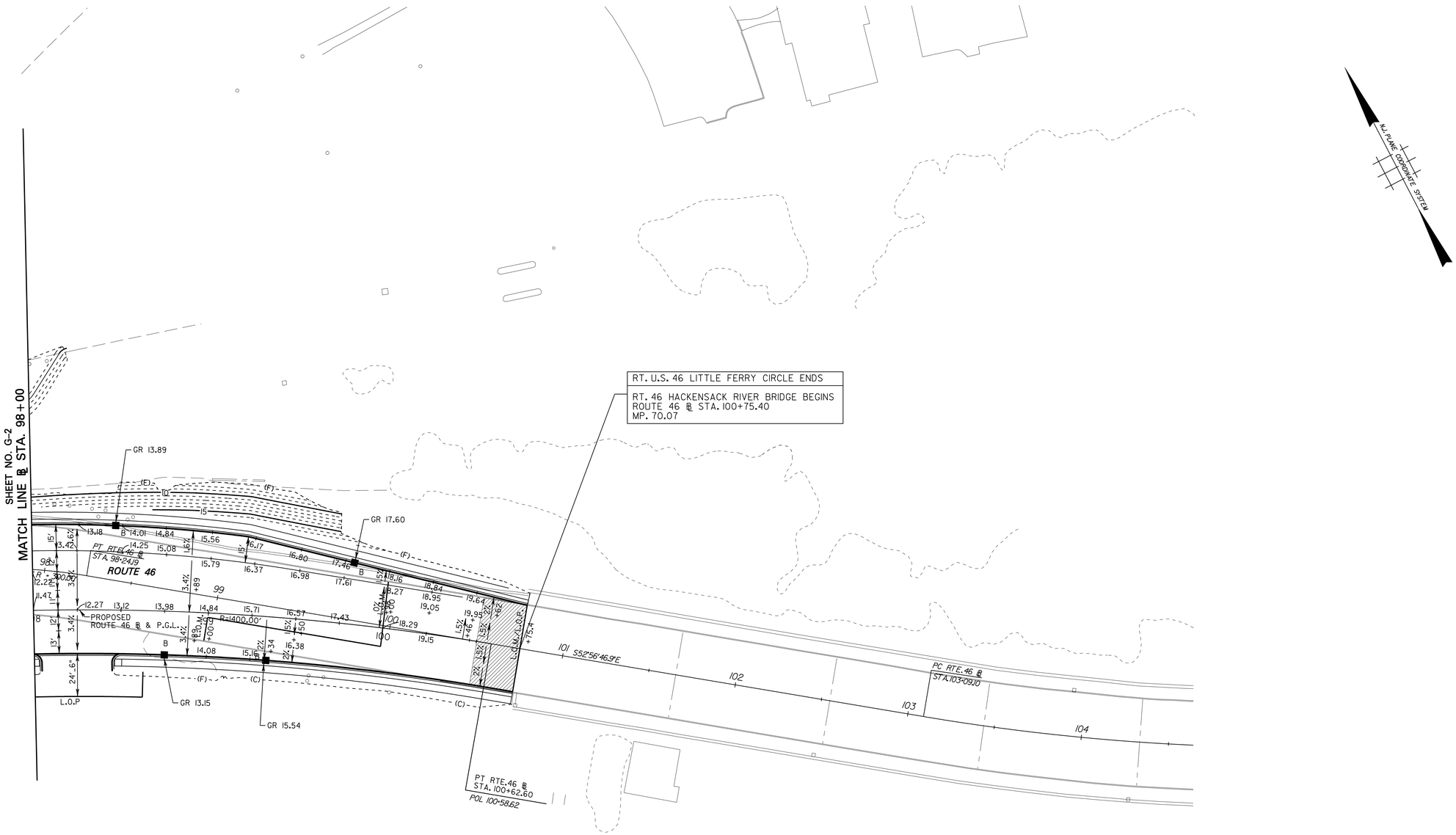

SCALE IN FEET

30' 20' 10' 0 30' 60'

G-3 / G-5

NEW JERSEY DEPARTMENT OF TRANSPORTATION

GRADES

ROUTE U.S. 46 LITTLE FERRY CIRCLE

CONTRACT NO. 069950373

PARSONS BRINCKERHOFF, INC.

CERTIFICATION OF AUTHORIZATION NO. 24GA28029800

MICHAEL D. HELMLINGER

N.J. PROFESSIONAL ENGINEER NO. 24GE03812100

32

PARSONS BRINCKERHOFF CADD DATA

OPERATOR	Detore	QUEUE	\\amprlpr-t01\PRIPL03_BW_IP
PLOT DATE	08-MAR-2013 09:05		
PENTABLE	ehx.tbl		
DESIGN FILE	T:\20063\gr03.dgn		

STATE	FEDERAL PROJECT NO.
N.J.	

BOROUGH OF LITTLE FERRY

COUNTY OF BERGEN

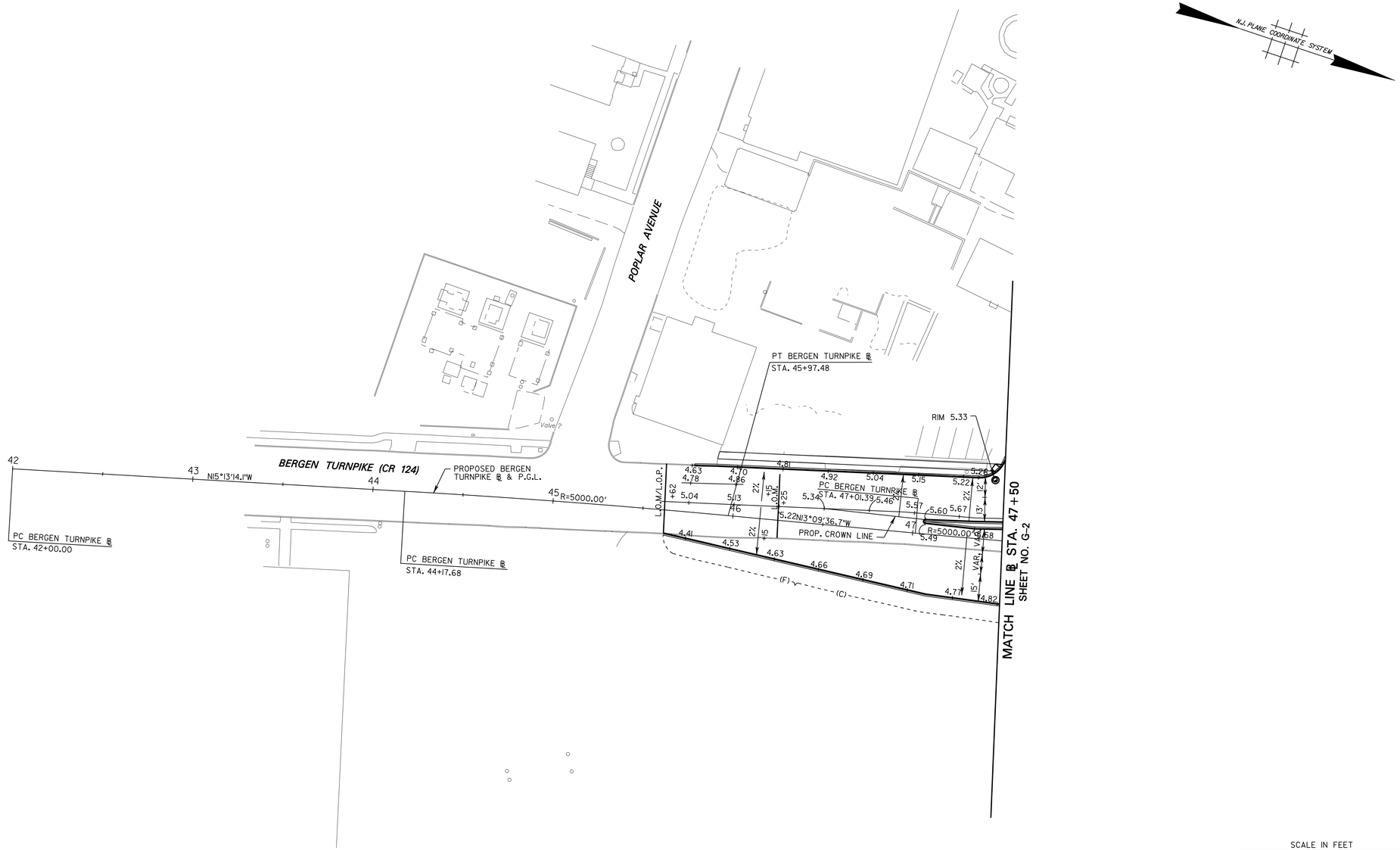

SCALE IN FEET

30' 20' 10' 0 30' 60'

G-4 / G-5

NEW JERSEY DEPARTMENT OF TRANSPORTATION

GRADES

ROUTE U.S. 46 LITTLE FERRY CIRCLE

CONTRACT NO. 069950373

PARSONS BRINCKERHOFF, INC.

CERTIFICATION OF AUTHORIZATION NO. 24GA28029800

MICHAEL D. HELMLINGER

N.J. PROFESSIONAL ENGINEER NO. 24GE03812100

33

PARSONS BRINCKERHOFF CADD DATA

OPERATOR	Detore	QUEUE	\\ampr1pr10\PRIPL03_BW_IP
PLOT DATE	08-MAR-2013 09:05		
PENTABLE	etx.tbl		
DESIGN FILE	T:\20063\gr04.dgn		

STATE	FEDERAL PROJECT NO.
N.J.	

BOROUGH OF LITTLE FERRY

COUNTY OF BERGEN

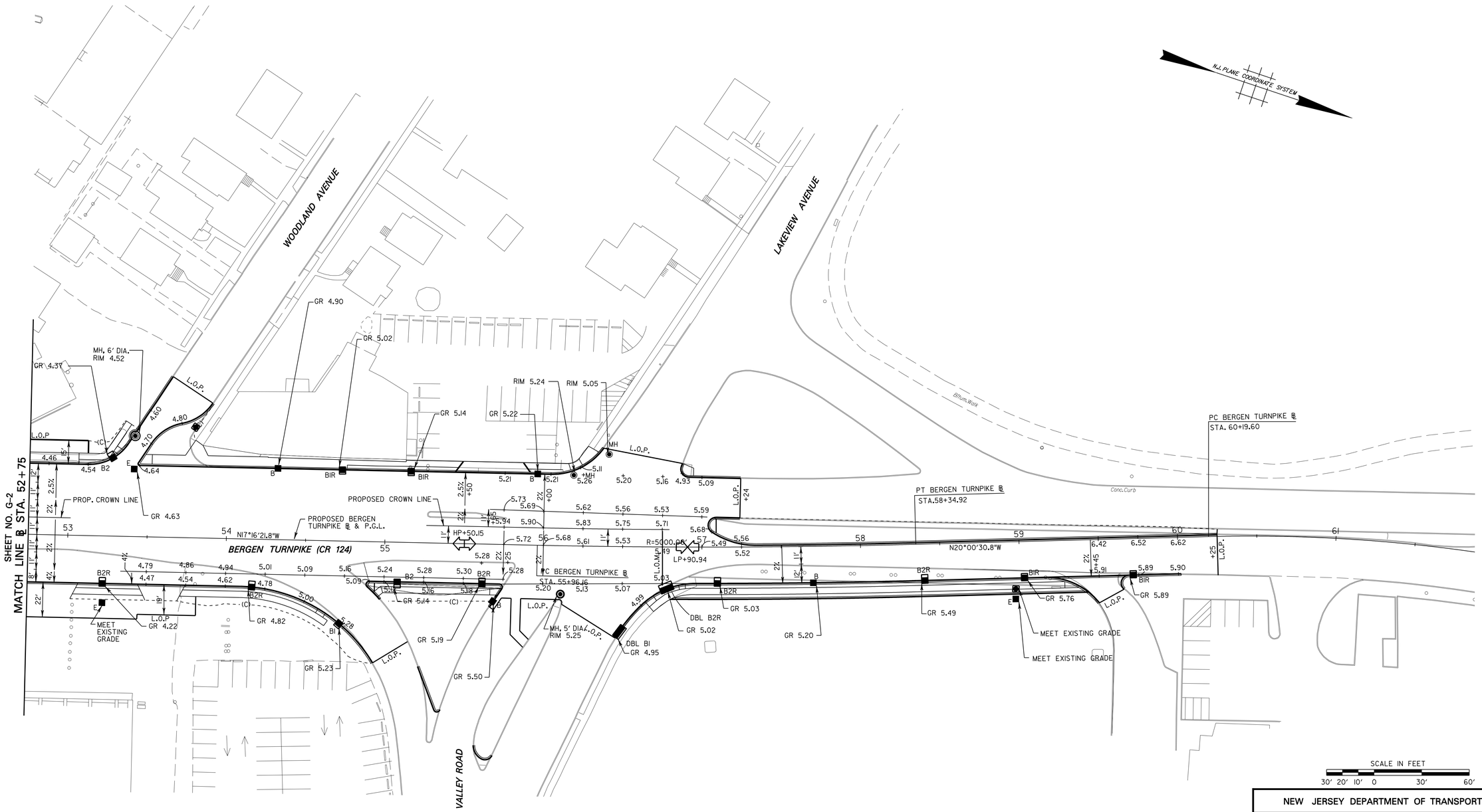

SCALE IN FEET

30' 20' 10' 0 30' 60'

G-5 / G-5

NEW JERSEY DEPARTMENT OF TRANSPORTATION

GRADES

ROUTE U.S. 46 LITTLE FERRY CIRCLE

CONTRACT NO. 069950373

PARSONS BRINCKERHOFF, INC.

CERTIFICATION OF AUTHORIZATION NO. 24GA28029800

MICHAEL D. HELMLINGER

N.J. PROFESSIONAL ENGINEER NO. 24GE03812100

34

PARSONS BRINCKERHOFF CADD DATA

OPERATOR	Detore	QUEUE \\ampr1pr+t01\PRIP1L03_BW1P
PLOT DATE	08-MAR-2013 09:05	
PENTABLE	ehx.tbl	
DESIGN FILE	T:\20063\gr05.dgn	

STATE	FEDERAL PROJECT NO.
N.J.	

BOROUGH OF LITTLE FERRY

COUNTY OF BERGEN

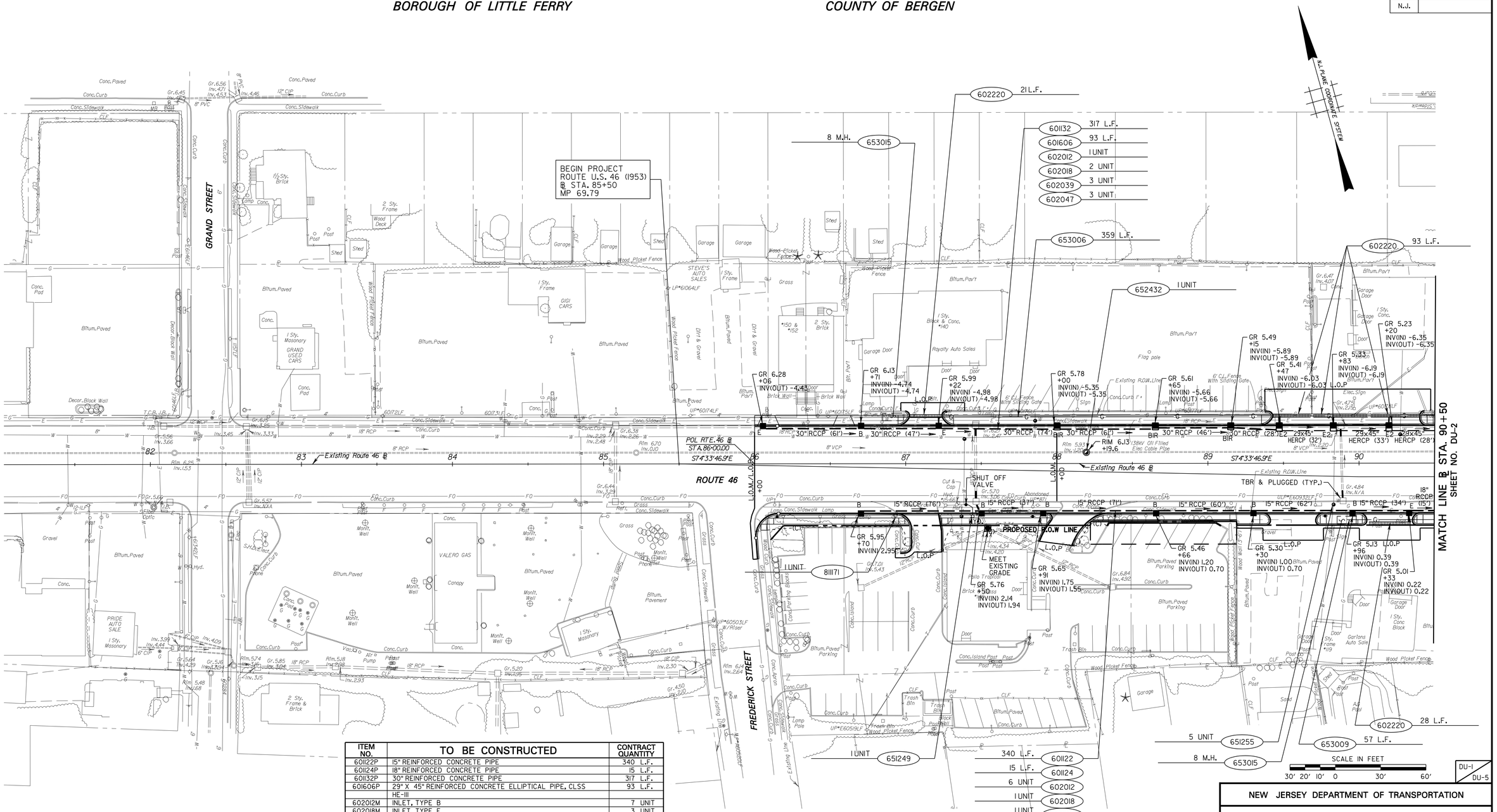

ITEM NO.	TO BE CONSTRUCTED	CONTRACT QUANTITY
601122P	15" REINFORCED CONCRETE PIPE	340 L.F.
601124P	18" REINFORCED CONCRETE PIPE	15 L.F.
601132P	30" REINFORCED CONCRETE PIPE	317 L.F.
601606P	29" X 45" REINFORCED CONCRETE ELLIPTICAL PIPE, CLSS HE-III	93 L.F.
602012M	INLET, TYPE B	7 UNIT
602018M	INLET, TYPE E	3 UNIT
602039M	INLET, TYPE E-2	3 UNIT
602047M	INLET, TYPE BIR	3 UNIT
602096M	INLET CONVERTED TO MANHOLE	1 UNIT
602220M	TRENCH DRAIN	142 L.F.
651249M	RELOCATE FIRE HYDRANT	1 UNIT
651255M	RESET WATER VALVE BOX	5 UNIT
652432M	RESET MANHOLE, SANITARY SEWER, USING EXISTING CASTING	1 UNIT
653006P	4" GAS MAIN	359 L.F.
653009P	6" GAS MAIN	57 L.F.
653015M	GAS MAIN, TIE-IN ASSISTANCE	16 M.H.
811171P	RESET IRRIGATION SYSTEM	1 UNIT

RESET WATER VALVE BOX

STATION	OFFSET
87+36	34' RIGHT
89+83	27' RIGHT
87+39	16' LEFT
87+84	28' LEFT
90+28	19' LEFT

NEW JERSEY DEPARTMENT OF TRANSPORTATION

DRAINAGE AND UTILITY PLANS

ROUTE U.S. 46 LITTLE FERRY CIRCLE

CONTRACT NO. 069950373

PARSONS BRINCKERHOFF, INC.
CERTIFICATION OF AUTHORIZATION NO. 24GA28029800

MICHAEL D. HELMLINGER
N.J. PROFESSIONAL ENGINEER NO. 24GE03812100

PARSONS BRINCKERHOFF CADD DATA

OPERATOR	Detore	QUEUE	\\ampr1pr+01\PRIPL03.BW.P
PLOT DATE	08-MAR-2013 09:05		
PENTABLE	ehx.tbl		
DESIGN FILE	T:\20063\du01.dgn		

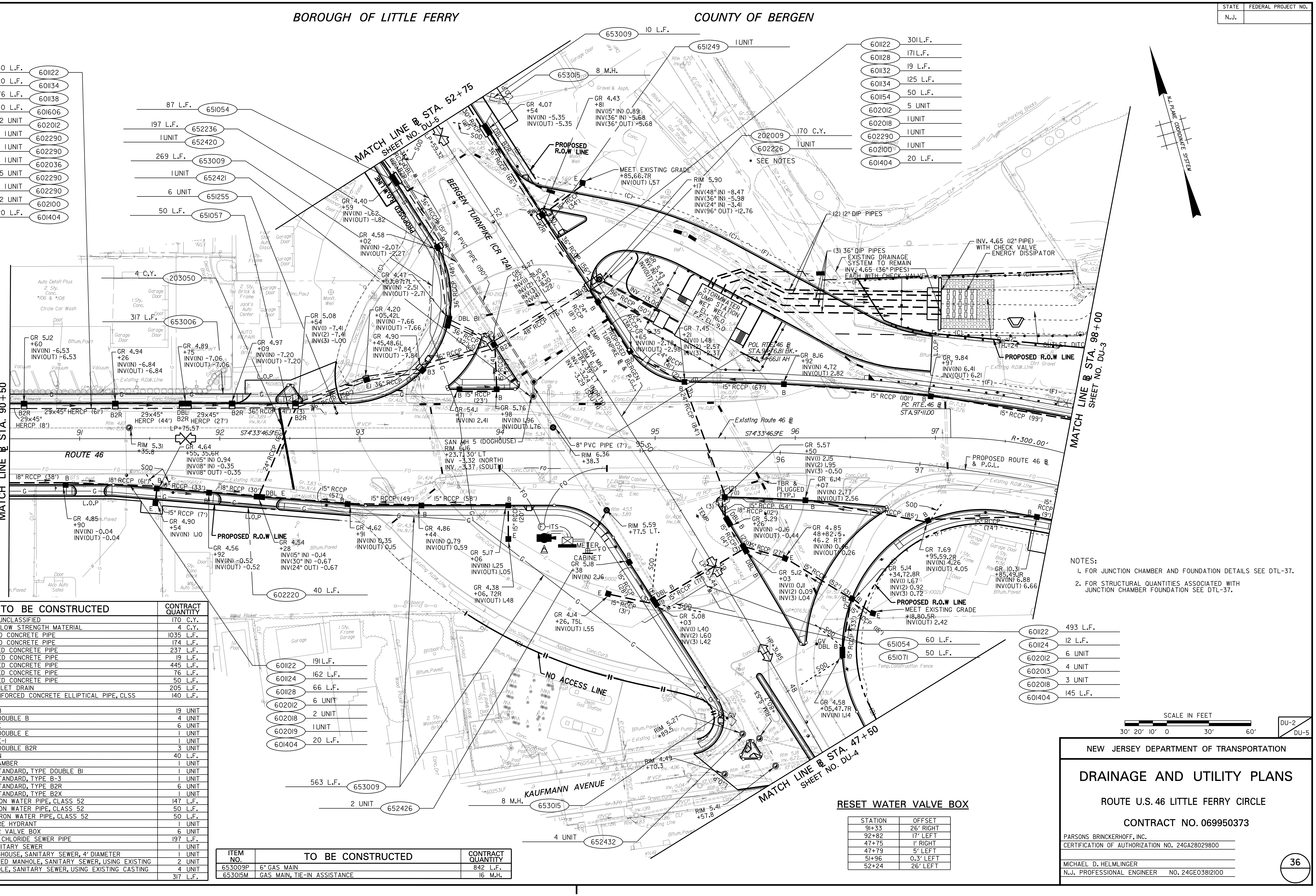

NOTES:

1. FOR JUNCTION CHAMBER AND FOUNDATION DETAILS SEE DTL-37.
2. FOR STRUCTURAL QUANTITIES ASSOCIATED WITH JUNCTION CHAMBER FOUNDATION SEE DTL-37.

ITEM NO.	TO BE CONSTRUCTED	CONTRACT QUANTITY
202009P	EXCAVATION, UNCLASSIFIED	170 C.Y.
203050M	CONTROLLED LOW STRENGTH MATERIAL	4 C.Y.
601122P	15" REINFORCED CONCRETE PIPE	1035 L.F.
601124P	18" REINFORCED CONCRETE PIPE	174 L.F.
601128P	24" REINFORCED CONCRETE PIPE	237 L.F.
601132P	30" REINFORCED CONCRETE PIPE	19 L.F.
601134P	36" REINFORCED CONCRETE PIPE	445 L.F.
601138P	48" REINFORCED CONCRETE PIPE	76 L.F.
601154P	96" REINFORCED CONCRETE PIPE	50 L.F.
601404P	SUBBASE OUTLET DRAIN	205 L.F.
601606P	29" X 45" REINFORCED CONCRETE ELLIPTICAL PIPE, CLSS	140 L.F.
	HE-III	
602012M	INLET, TYPE B	19 UNIT
602013M	INLET, TYPE DOUBLE B	4 UNIT
602018M	INLET, TYPE E	6 UNIT
602019M	INLET, TYPE DOUBLE E	1 UNIT
602036M	INLET, TYPE E-1	1 UNIT
602100M	INLET, TYPE DOUBLE B2R	3 UNIT
602220M	TRENCH DRAIN	40 L.F.
602226M	JUNCTION CHAMBER	1 UNIT
602290M	INLET, NON STANDARD, TYPE DOUBLE B1	1 UNIT
602290M	INLET, NON STANDARD, TYPE B-3	1 UNIT
602290M	INLET, NON STANDARD, TYPE B2R	6 UNIT
602290M	INLET, NON STANDARD, TYPE B2X	1 UNIT
651054P	6" DUCTILE IRON WATER PIPE, CLASS 52	147 L.F.
651057P	8" DUCTILE IRON WATER PIPE, CLASS 52	50 L.F.
651071P	20" DUCTILE IRON WATER PIPE, CLASS 52	50 L.F.
651249M	RELOCATE FIRE HYDRANT	1 UNIT
651255M	RESET WATER VALVE BOX	6 UNIT
652236P	8" POLYVINYL CHLORIDE SEWER PIPE	197 L.F.
652420M	MANHOLE, SANITARY SEWER	1 UNIT
652421M	MANHOLE, DOGHOUSE, SANITARY SEWER, 4' DIAMETER	1 UNIT
652426M	RECONSTRUCTED MANHOLE, SANITARY SEWER, USING EXISTING	2 UNIT
652432M	RESET MANHOLE, SANITARY SEWER, USING EXISTING CASTING	4 UNIT
653006P	4" GAS MAIN	317 L.F.

ITEM NO.	TO BE CONSTRUCTED	CONTRACT QUANTITY
653009P	6" GAS MAIN	842 L.F.
653015M	GAS MAIN, TIE-IN ASSISTANCE	16 M.H.

RESET WATER VALVE BOX

STATION	OFFSET
91+33	26' RIGHT
92+82	17' LEFT
47+75	1' RIGHT
47+79	5' LEFT
51+96	0.3' LEFT
52+24	26' LEFT

SCALE IN FEET: 30' 20' 10' 0 30' 60'

STATE	FEDERAL PROJECT NO.
N.J.	

DU-2 / DU-5

NEW JERSEY DEPARTMENT OF TRANSPORTATION

DRAINAGE AND UTILITY PLANS

ROUTE U.S. 46 LITTLE FERRY CIRCLE

CONTRACT NO. 069950373

PARSONS BRINCKERHOFF, INC.
CERTIFICATION OF AUTHORIZATION NO. 24GA28029800

MICHAEL D. HELMLINGER
N.J. PROFESSIONAL ENGINEER NO. 24GE03812100

PARSONS BRINCKERHOFF CADD DATA
OPERATOR: Detore | QUEUE: \\dmprfprt01\PRIPL03_BW.IP
PLOT DATE: 08-MAR-2013 09:06
PENTABLE: ehx.tbl
DESIGN FILE: T:\20063\du02.dgn

STATE	FEDERAL PROJECT NO.
N.J.	

BOROUGH OF LITTLE FERRY

COUNTY OF BERGEN

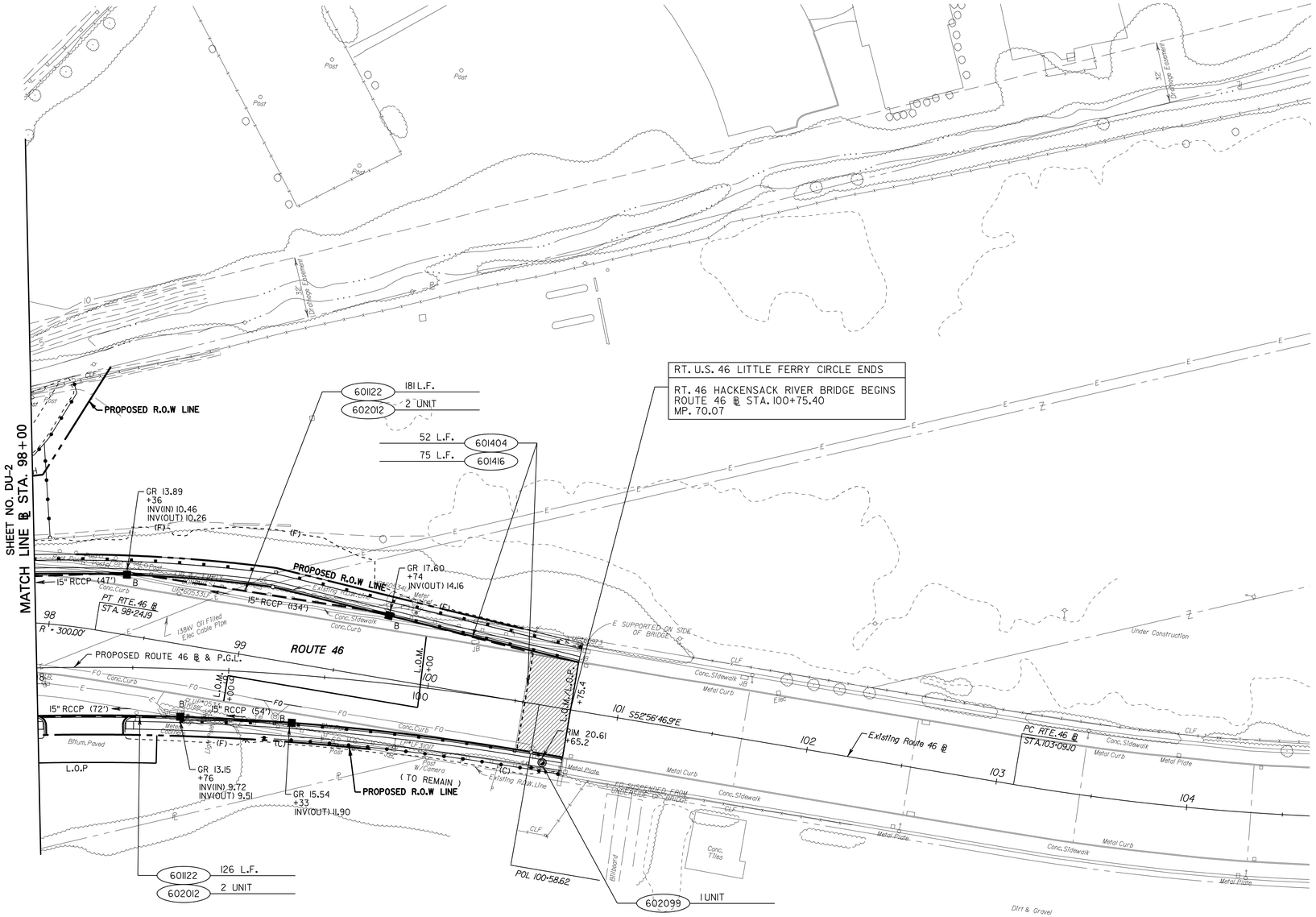

ITEM NO.	TO BE CONSTRUCTED	CONTRACT QUANTITY
601122P	15" REINFORCED CONCRETE PIPE	307 L.F.
601404P	SUBBASE OUTLET DRAIN	52 L.F.
601416P	UNDERDRAIN, TYPE F	75 L.F.
602012M	INLET, TYPE B	4 UNIT
602099M	RESET EXISTING CASTING	1 UNIT

SCALE IN FEET

30' 20' 10' 0 30' 60'

DU-3 / DU-5

NEW JERSEY DEPARTMENT OF TRANSPORTATION

DRAINAGE AND UTILITY PLANS

ROUTE U.S. 46 LITTLE FERRY CIRCLE

CONTRACT NO. 069950373

PARSONS BRINCKERHOFF, INC.
CERTIFICATION OF AUTHORIZATION NO. 24GA28029800

MICHAEL D. HELMLINGER
N.J. PROFESSIONAL ENGINEER NO. 24GE03812100

PARSONS BRINCKERHOFF CADD DATA

OPERATOR	Detore	QUEUE	\\ampr1pr1t01\PRIPL03_BW_IP
PLOT DATE	08-MAR-2013 09:06		
PENTABLE	ehx.tbl		
DESIGN FILE	T:\20063\du03.dgn		

STATE	FEDERAL PROJECT NO.
N.J.	

BOROUGH OF LITTLE FERRY

COUNTY OF BERGEN

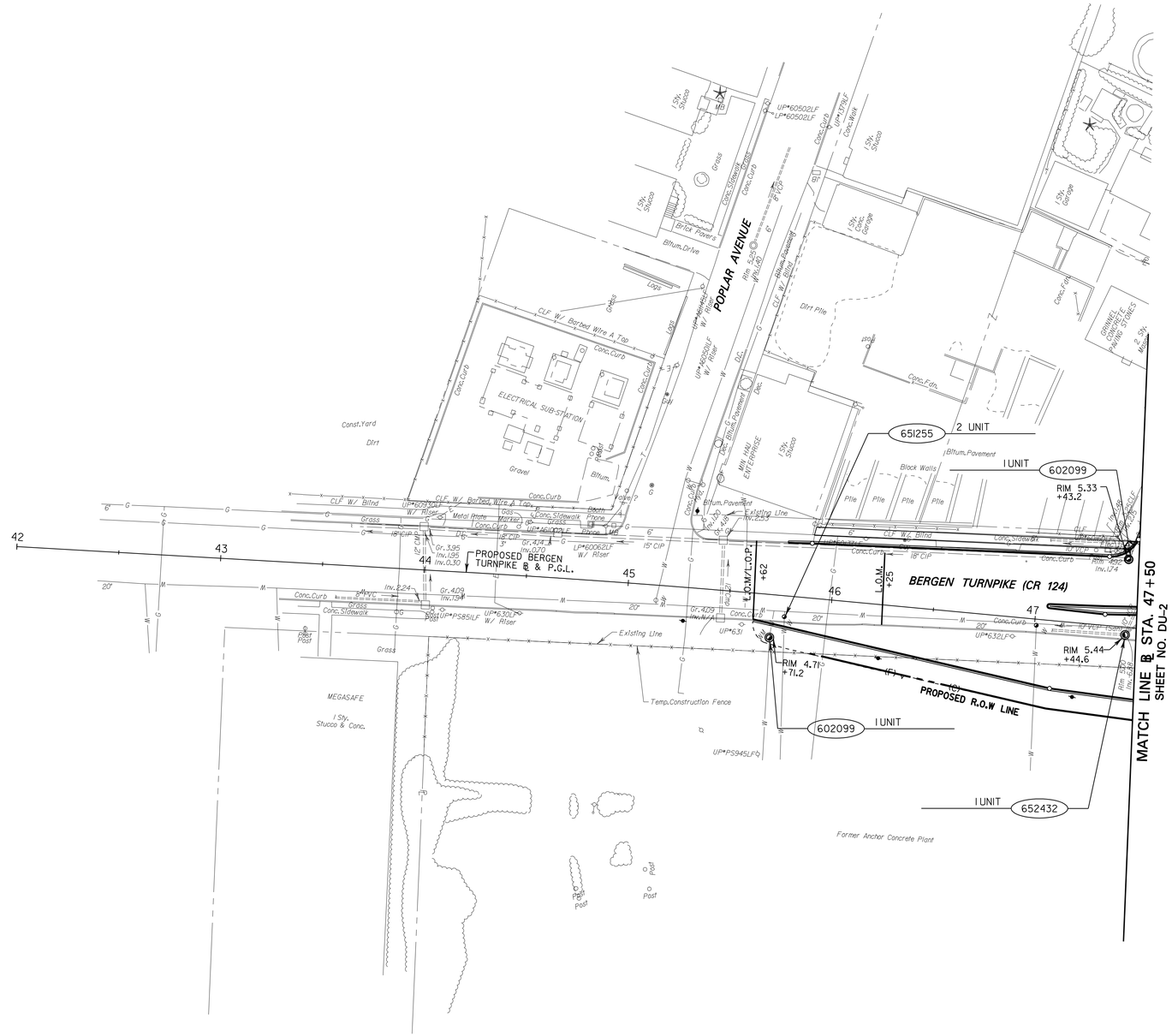

RESET WATER VALVE BOX

STATION	OFFSET
45+78	10' RIGHT
47+02	2' RIGHT

ITEM NO.	TO BE CONSTRUCTED	CONTRACT QUANTITY
602099M	RESET EXISTING CASTING	2 UNIT
651255M	RESET WATER VALVE BOX	2 UNIT
652432M	RESET MANHOLE, SANITARY SEWER, USING EXISTING CASTING	1 UNIT

SCALE IN FEET

30' 20' 10' 0 30' 60'

DU-4 / DU-5

NEW JERSEY DEPARTMENT OF TRANSPORTATION

DRAINAGE AND UTILITY PLANS

ROUTE U.S. 46 LITTLE FERRY CIRCLE

CONTRACT NO. 069950373

PARSONS BRINCKERHOFF, INC.
CERTIFICATION OF AUTHORIZATION NO. 24GA28029800

MICHAEL D. HELMLINGER
N.J. PROFESSIONAL ENGINEER NO. 24GE03812100

PARSONS BRINCKERHOFF CADD DATA

OPERATOR	Detore	QUEUE	\\ampr1pr-t01\PRIPL03.BW_IP
PLOT DATE	08-MAR-2013 09:06		
PENTABLE	ehx.tbl		
DESIGN FILE	T:\20063\du04.dgn		

STATE	FEDERAL PROJECT NO.
N.J.	

BOROUGH OF LITTLE FERRY

COUNTY OF BERGEN

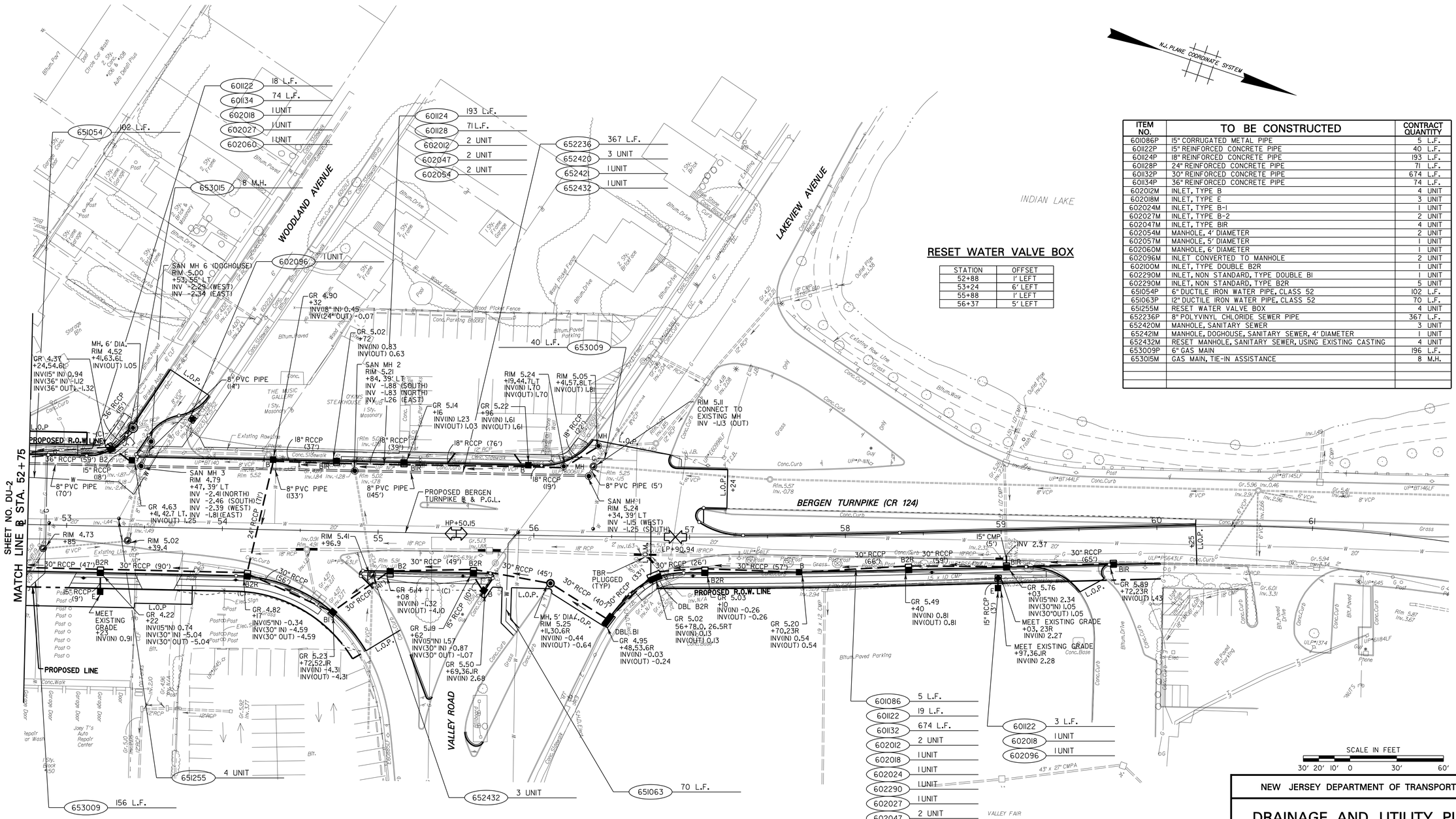

RESET WATER VALVE BOX

STATION	OFFSET
52+88	1' LEFT
53+24	6' LEFT
55+88	1' LEFT
56+37	5' LEFT

ITEM NO.	TO BE CONSTRUCTED	CONTRACT QUANTITY
601086P	15" CORRUGATED METAL PIPE	5 L.F.
601122P	15" REINFORCED CONCRETE PIPE	40 L.F.
601124P	18" REINFORCED CONCRETE PIPE	193 L.F.
601128P	24" REINFORCED CONCRETE PIPE	71 L.F.
601132P	30" REINFORCED CONCRETE PIPE	674 L.F.
601134P	36" REINFORCED CONCRETE PIPE	74 L.F.
602012M	INLET, TYPE B	4 UNIT
602018M	INLET, TYPE E	3 UNIT
602024M	INLET, TYPE B-1	1 UNIT
602027M	INLET, TYPE B-2	2 UNIT
602047M	INLET, TYPE BIR	4 UNIT
602054M	MANHOLE, 4' DIAMETER	2 UNIT
602057M	MANHOLE, 5' DIAMETER	1 UNIT
602060M	MANHOLE, 6' DIAMETER	1 UNIT
602096M	INLET CONVERTED TO MANHOLE	2 UNIT
602100M	INLET, TYPE DOUBLE B2R	1 UNIT
602290M	INLET, NON STANDARD, TYPE DOUBLE BI	1 UNIT
602290M	INLET, NON STANDARD, TYPE B2R	5 UNIT
651054P	6" DUCTILE IRON WATER PIPE, CLASS 52	102 L.F.
651063P	12" DUCTILE IRON WATER PIPE, CLASS 52	70 L.F.
651255M	RESET WATER VALVE BOX	4 UNIT
652236P	8" POLYVINYL CHLORIDE SEWER PIPE	367 L.F.
652420M	MANHOLE, SANITARY SEWER	3 UNIT
652421M	MANHOLE, DOGHOUSE, SANITARY SEWER, 4' DIAMETER	1 UNIT
652432M	RESET MANHOLE, SANITARY SEWER, USING EXISTING CASTING	4 UNIT
653009P	6" GAS MAIN	196 L.F.
653015M	GAS MAIN, TIE-IN ASSISTANCE	8 M.H.

DU-5
DU-5

NEW JERSEY DEPARTMENT OF TRANSPORTATION

DRAINAGE AND UTILITY PLANS

ROUTE U.S. 46 LITTLE FERRY CIRCLE

CONTRACT NO. 069950373

PARSONS BRINCKERHOFF, INC.
CERTIFICATION OF AUTHORIZATION NO. 24GA28029800

MICHAEL D. HELMLINGER
N.J. PROFESSIONAL ENGINEER NO. 24GE03812100

PARSONS BRINCKERHOFF CADD DATA

OPERATOR	Detore	QUEUE	\\ampr1pr+01\PRIPL03_BW.IP
PLOT DATE	08-MAR-2013 09:06		
PENTABLE	ehx.tbl		
DESIGN FILE	T:\20063\du05.dgn		

GENERAL NOTES

1. ADVANCE WARNING SIGNS, DISTANCES, AND TAPER LENGTHS MAY BE EXTENDED, AT THE DIRECTION OF THE ENGINEER, TO ADJUST FOR REDUCED VISIBILITY DUE TO HORIZONTAL AND VERTICAL CURVATURE OF THE ROADWAY.
2. THE APPROXIMATE LOCATIONS OF THE ILLUMINATED FLASHING ARROW BOARDS ARE SHOWN ON THE TRAFFIC CONTROL PLANS. THESE LOCATIONS MAY NEED TO BE MODIFIED TO ADJUST FOR VISIBILITY DUE TO HORIZONTAL OR VERTICAL CURVATURE OF THE ROADWAY OR TO POSITION AT A SAFER LOCATION. ILLUMINATED FLASHING ARROW BOARDS ARE TO BE USED FOR TEMPORARY LANE CLOSINGS AND AT LOCATIONS SHOWN ON THE TRAFFIC CONTROL PLANS.
3. PRIOR TO ANY ROAD CONSTRUCTION, TRAFFIC CONTROL SIGNS AND DEVICES SHALL BE IN PLACE.
4. RAMPS AND/OR SIDE STREETS ENTERING THE ROADWAY AFTER THE FIRST ADVANCE WARNING SIGN SHALL BE PROVIDED WITH AT LEAST ONE W20-1F SIGN (ROAD WORK AHEAD) AS A MINIMUM.
5. ALL EXISTING ROAD SIGNS, PAVEMENT MARKINGS, AND/OR PLOWABLE PAVEMENT REFLECTORS THAT CONFLICT WITH THE PROPOSED TRAFFIC CONTROL PLAN SHALL BE COVERED, REMOVED, OR RELOCATED AS DIRECTED BY THE ENGINEER.
6. CONFLICTING OR NON-OPERATING SIGNAL INDICATIONS ON THE EXISTING, TEMPORARY, OR PERMANENT TRAFFIC SIGNAL SYSTEMS SHALL BE BAGGED OR COVERED.
7. MAINTENANCE AND PROTECTION OF TRAFFIC SHALL BE IN ACCORDANCE WITH THE MANUAL OF UNIFORM TRAFFIC CONTROL DEVICES PART VI TEMPORARY TRAFFIC CONTROL , UNLESS OTHERWISE NOTED IN THE PLANS AND SPECIFICATIONS, AND SHALL BE APPROVED BY THE ENGINEER.
8. CONSTRUCTION W99-2 (GIVE US A BRAKE) SHALL BE LOCATED 200 FEET IN ADVANCE OF PROJECT LIMITS.
9. A W1-6 (ARROW) SIGN MOUNTED ON A BREAKAWAY BARRICADE AND CENTERED ON THE CLOSED WIDTH SHALL BE LOCATED 100 FEET BEYOND EACH INTERSECTION OR MAIN ACCESS POINT WITHIN THE AREA OF A LANE OR SHOULDER CLOSURE.
10. CONSTRUCTION SIGNS R11-4 (ROAD CLOSED TO THRU TRAFFIC) SHALL BE PLACED AT THE INTERSECTING STREETS THAT ARE CLOSED TO TRAFFIC BECAUSE OF CONSTRUCTION.
11. CONSTRUCTION SIGNS W8-9A (SYMBOL FOR UNEVEN PAVEMENT AND W8-14A (GROOVED PAVEMENT)) SHALL BE USED WHEN SUCH PAVEMENT CONDITIONS EXIST. THE PLACEMENT OF THESE SIGNS SHALL BE AS DIRECTED BY THE ENGINEER.
12. MOVING WORK AREAS IN A PERMANENT LANE CLOSURE REQUIRE A TRAILER MOUNTED ILLUMINATED FLASHING ARROW TO REMAIN AT THE END OF THE TAPER. THE TRUCK MOUNTED CRASH CUSHION SHALL MOVE WITH THE WORK AREAS TO KEEP A 75 FEET MINIMUM AND A 175 FEET MAXIMUM BUFFER IN ADVANCE OF EACH WORK AREA.
13. THE CONTRACTOR SHALL SUBMIT A PLAN FOR SAFE ACCESS OF CONSTRUCTION VEHICLES THROUGHOUT THE WORK SITE WHERE SPACE CONSTRAINTS PREVENT THE USE OF LANE CLOSURES. THE PLAN SHALL BE SUBMITTED TO THE ENGINEER IN ACCORDANCE WITH SECTION 617 OF THE STANDARDS SPECIFICATIONS.
14. ALL EXCAVATED AREAS WITHIN OR ADJACENT TO THE ROADWAY SHALL BE BACKFILLED AND PLACED ON A MINIMUM 6H:1V SLOPE PRIOR TO THE END OF EACH WORK DAY. OTHER EXCAVATED AREAS WITHIN THE CLEAR ZONE ARE TO BE EITHER BACKFILLED OR A TEMPORARY BARRIER SET IN PLACE TO SHIELD VEHICULAR AND PEDESTRIAN TRAFFIC. IF BARRIER OPTION IS SELECTED, NO PAYMENT SHALL BE PROVIDED.
15. WHERE REQUIRED, THE CONTRACTOR SHALL MAKE SAFETY PROVISIONS FOR MAINTAINING PEDESTRIAN CROSSING LOCATIONS AND TYPE AS DIRECTED BY THE ENGINEER.
16. HOT MIX ASPHALT CONCRETE PLACED DURING THE VARIOUS CONSTRUCTION STAGES SHALL BE TRANSITIONED ON A MINIMUM 20H:1V SLOPE TO MEET THE ADJACENT EXISTING GRADE AT THE LONGITUDINAL AND TRANSVERSE LIMITS OF THE STAGE CONSTRUCTION AREAS UNLESS OTHERWISE NOTED ON THE STAGE CONSTRUCTION PLANS.
17. THE PLACEMENT AND RELOCATION OF PRECAST CONCRETE CURB, CONSTRUCTION BARRIER SHALL BE DONE DURING APPROVED OFF-PEAK HOURS WHEN TRAFFIC MAY BE REDUCED TO ONE LANE IN EACH DIRECTION.
18. CONSTRUCTION ZONE SPEED LIMIT SHALL BE DETERMINED BY THE TRAFFIC SIGNAL AND SAFETY ENGINEERING, REGIONAL TRAFFIC ENGINEER , WORKZONE AT THE TIME OF OR DURING CONSTRUCTION AS REQUESTED BY THE RESIDENT ENGINEER, WORK ZONE.
19. THE SPEED LIMIT SIGN, R2-1 (BLACK ON WHITE) WITH ADDED WORK ZONE PLATE (BLACK ON ORANGE) SIGNS, SHALL BE LOCATED THROUGH WORK AREAS AS DIRECTED BY THE TRAFFIC SIGNAL AND SAFETY ENGINEERING, REGIONAL TRAFFIC ENGINEER, WORK ZONE.
20. A REDUCED SPEED AHEAD SIGN, W3-5 (BLACK ON ORANGE), SHALL BE LOCATED IN ADVANCE OF SPEED LIMIT R2-1 SIGNS, WHICH REDUCE THE NORMAL POSTED SPEED LIMIT THROUGH THE CONSTRUCTION ZONE.
21. TRAFFIC FINES DOUBLED IN WORK AREA SIGN, R(NJ)5-17(S), 48 INCH BY 30 INCH, SHALL BE LOCATED 500 FEET AFTER THE FIRST ADVANCE WARNING SIGN (W20 SERIES) AT EACH WORK AREA LOCATED WITHIN URBAN AREAS. THIS SIGN SHALL ALSO BE USED ON PROJECTS REQUIRING MOVING OPERATIONS, IN WHICH CASE THE SIGN SHALL BE MOUNTED ON A SLOW MOVING CONSTRUCTION VEHICLE.
22. THE FINAL HOT MIX ASPHALT CONCRETE SURFACE PAVEMENT SHALL NOT BE CONSTRUCTED UNTIL THE FINAL STAGE OF THE PROJECT. MANHOLES AND INLETS SHALL BE SET TO FINISHED GRADE AND TEMPORARY PAVEMENT RAMPS ARE TO BE CONSTRUCTED AROUND THEM WITH A MINIMUM 20H:1V SLOPE IN ALL DIRECTIONS USING HOT MIX ASPHALT PAVEMENT. THIS TEMPORARY MATERIAL WILL BE REMOVED IMMEDIATELY PRIOR TO PLACING THE SURFACE COURSE.
23. TRAFFIC CONTROL DEVICES FOR LANE CLOSURES INCLUDING SIGNS, CONES, BARRICADES, ETC. SHALL BE PLACED AS SHOWN ON PLANS. SIGNS SHALL NOT BE PLACED WITHOUT ACTUAL LANE CLOSURES AND SHALL BE IMMEDIATELY REMOVED UPON REMOVAL OF THE CLOSURES.
24. CONES MAY BE SUBSTITUTED FOR DRUMS AND INSTALLED UPON APPROVAL OF THE ENGINEER.
25. EXISTING DRAINAGE SYSTEM TO BE MAINTAINED UNTIL PROPOSED PUMP STATION IS OPERATIONAL.

TRAFFIC IMPACT NOTICES AND CHANGES

A. TERMS - WHEN THE FOLLOWING TERMS ARE USED, THE INTENT AND MEANING SHALL BE AS FOLLOWS:

IMPACTS TO NORMAL TRAFFIC FLOW - WORK THAT REQUIRES A PORTION OF THE PAVED ROADWAY BEING BLOCKED OR CLOSED WITH SAFETY DEVICES OR VEHICLES, INCLUDING, BUT NOT LIMITED TO, FULL OR PARTIAL LANE CLOSURES, FULL OR PARTIAL RAMP CLOSURES, SHOULDER CLOSURES, MOVING OPERATIONS SUCH AS TRAFFIC STRIPING OR SWEEPING, LANE SHIFTS, OR ALTERNATING TRAFFIC. THIS APPLIES EVEN WHEN DETOURS ARE PROVIDED.

TEMPORARY LANE CLOSURES - WORK DESCRIBED UNDER "IMPACTS TO NORMAL TRAFFIC FLOW" WHICH IS ROUTINELY SET UP AND REMOVED ON A DAILY BASIS.

PERMANENT LANE CLOSURES - WORK DESCRIBED UNDER "IMPACTS TO NORMAL TRAFFIC FLOW" WHICH REMAINS IN PLACE CONTINUOUSLY FOR 24 HOURS OR MORE

B. ADVANCE NOTICES - FOR THE INITIAL START OF WORK THAT REQUIRES "IMPACTS TO NORMAL TRAFFIC FLOW", THE CONTRACTOR SHALL NOTIFY THE RESIDENT ENGINEER IN WRITING, ON THE ADVANCE FORM TO103 PROVIDED BY THE DEPARTMENT, OF THE PROPOSED DATE. THE NOTICE SHALL BE SUBMITTED AT LEAST TWENTY-EIGHT CALENDAR DAYS, BUT NOT MORE THAN SIXTY CALENDAR DAYS, BEFORE THE PROPOSED DATE. START OF WORK THAT IMPACTS NORMAL TRAFFIC FLOW WILL NOT BE PERMITTED PRIOR TO THE DATE STATED IN THE NOTICE. THE CONTRACTOR SHALL CONFIRM, IN WRITING TO THE RESIDENT ENGINEER, THE PROPOSED DATE SEVEN (AND/OR FOURTEEN) CALENDAR DAYS BEFORE STARTING THE ESTABLISHMENT OF THE TRAFFIC CONTROL MEASURES FOR THE TRAFFIC IMPACT. THE CONTRACTOR SHALL IMMEDIATELY NOTIFY THE RESIDENT ENGINEER IF THE PROPOSED ESTABLISHMENT CAN NOT BE COMPLETED ON THE PROPOSED DATE.

FOR A "PERMANENT LANE CLOSURE", THE CONTRACTOR SHALL NOTIFY THE RESIDENT ENGINEER IN WRITING, ON ADVANCE FORM TO103, OF THE PROPOSED DATE A NEW TRAFFIC PATTERN WILL BE ESTABLISHED. THE NOTICE SHALL BE SUBMITTED AT LEAST TWENTY-EIGHT CALENDAR DAYS, BUT NOT MORE THAN SIXTY CALENDAR DAYS, IN ADVANCE OF THE PROPOSED DATE. START OF A NEW TRAFFIC PATTERN WILL NOT BE PERMITTED PRIOR TO THE DATE STATED IN THE NOTICE. THE CONTRACTOR SHALL CONFIRM, IN WRITING TO THE RESIDENT ENGINEER, THE PROPOSED DATE OF THE NEW TRAFFIC PATTERN SEVEN (AND/OR FOURTEEN) DAYS BEFORE STARTING TRAFFIC CONTROL MEASURES FOR THE ESTABLISHMENT OF THE NEW PATTERN. THE CONTRACTOR SHALL IMMEDIATELY NOTIFY THE RESIDENT ENGINEER IF THE PROPOSED ESTABLISHMENT CAN NOT BE COMPLETED ON THE PROPOSED DATE.

STARTING THE ESTABLISHMENT OF A NEW PERMANENT TRAFFIC PATTERN SHALL BEGIN NO EARLIER THAN 11:00 PM FRIDAY AND SHALL BE COMPLETED AND READY FOR OPERATIONS BY 6:00 PM THE FOLLOWING SUNDAY. THE ESTABLISHMENT SHALL BE COMPLETED IN ACCORDANCE WITH THE LANE CLOSURE HOURS SPECIFIED IN THE CONTRACT. ADVANCE NOTICES SENT PRIOR TO THE PRECONSTRUCTION MEETING SHALL BE ADDRESSED TO THE CONTACT PERSON AS SPECIFIED IN SUBSECTION 101.04 OF THE SPECIAL PROVISIONS.

C. PROGRESS NOTICES
ALL "IMPACTS TO NORMAL TRAFFIC FLOW" SCHEDULED FOR THE SEVEN DAY PERIOD STARTING ON THE FOLLOWING MONDAY SHALL BE SUBMITTED TO THE RESIDENT ENGINEER BY 9:00 AM OF EACH FRIDAY ON WEEKLY FORM TO-101 PROVIDED BY THE DEPARTMENT.

EACH DAY OF "TEMPORARY LANE CLOSURES" SHALL BE SUBMITTED TO THE RESIDENT ENGINEER BY 9:00 AM THE DAY IN ADVANCE OF THE START OF THOSE OPERATIONS ON DAILY FORM TO-102 PROVIDED BY THE DEPARTMENT.

"TEMPORARY LANE CLOSURES" FOR WEEKENDS SHALL BE SUBMITTED TO THE RESIDENT ENGINEER BY 9:00 AM ON THE IMMEDIATELY PRECEDING FRIDAY ON THE DAILY FORM TO-102 PROVIDED BY THE DEPARTMENT.

D. CHANGES TO THE SCHEDULED CLOSURES
REQUEST FOR A CHANGE TO THE TRAFFIC CONTROL REQUIREMENTS IN THE CONTRACT DOCUMENTS SHALL BE SUBMITTED IN WRITING TO THE RESIDENT ENGINEER AS FOLLOWS:

CHANGES TO THE SCHEDULED HOURS FOR "TEMPORARY LANE CLOSURES" SHALL BE SUBMITTED TO THE RESIDENT ENGINEER AT LEAST EIGHT CALENDAR DAYS IN ADVANCE OF WHEN THE CHANGE IS PROPOSED TO START. OTHER PROPOSED CHANGES TO "TEMPORARY LANE CLOSURES" AND ALL CHANGES TO "PERMANENT LANE CLOSURES" SHALL BE SUBMITTED TO THE RESIDENT ENGINEER AT LEAST FORTY CALENDAR DAYS IN ADVANCE OF WHEN THE CHANGE IS PROPOSED TO START.

NOTES - TRAFFIC CONTROL PLANS

1. THE ALLOWABLE SINGLE LANE CLOSURES SHALL BE IN ACCORDANCE WITH THE FOLLOWING SCHEDULE:

ROUTE 46 EAST AND WEST (TWO TRAVEL LANES EACH DIRECTION)

ALL LANES MAINTAINED (EACH DIRECTION)

MONDAY THROUGH THURSDAY	6:00AM TO 9:00PM
FRIDAY	6:00AM TO 9:30PM
SATURDAY	8:00AM TO 9:30PM
SUNDAY	8:30AM TO 9:00PM

ONE LANE MAINTAINED (EACH DIRECTION)

MONDAY THROUGH THURSDAY	9:00PM TO 6:00AM (NEXT DAY)
FRIDAY	9:30PM TO 8:00AM (SATURDAY)
SATURDAY	9:30PM TO 8:30AM (SUNDAY)
SUNDAY	9:00PM TO 6:00AM (MONDAY)

BERGEN TURNPIKE ALTERNATING TRAFFIC (FLAGGING OPERATION)

MONDAY - SUNDAY	9:00PM TO 6:00 AM THE NEXT DAY

ONE LANE TO BE MAINTAINED IN EACH DIRECTION ON BERGEN TURNPIKE AT ALL OTHER TIMES. ALLOWABLE LANE CLOSURE HOURS WILL ALSO APPLY TO SIDE STREETS THAT ARE AFFECTED BY THE CONSTRUCTION. LANE CLOSURES WILL NOT BE PERMITTED AT ANY OTHER TIME. UNLESS DICTATED BY THE TRAFFIC CONTROL PLANS. SHOULDER CLOSURES WILL BE PERMITTED ANY TIME, EXCEPT DURING HOLIDAY PERIODS.

NO LANE CLOSURES WILL BE PERMITTED ON THE FOLLOWING HOLIDAYS:

- EASTER SUNDAY (INCLUDING 6:00 AM SATURDAY UNTIL NOON MONDAY)
- MEMORIAL DAY (SEE NOTE BELOW)
- JULY 4TH (SEE NOTE BELOW)
- LABOR DAY (SEE NOTE BELOW)
- ELECTION DAY (6:00 AM UNTIL 8:00 PM THE DAY OF)
- THANKSGIVING DAY (SEE NOTE BELOW)
- CHRISTMAS DAY (SEE NOTE BELOW)
- NEW YEARS DAY (SEE NOTE BELOW)

NOTE:

IF HOLIDAY FALLS ON	NO LANE CLOSURES PERMITTED
SUNDAY OR MONDAY	6:00 AM FRIDAY UNTIL NOON TUESDAY
TUESDAY	6:00 AM FRIDAY UNTIL NOON WEDNESDAY
WEDNESDAY	6:00 AM TUESDAY UNTIL NOON THURSDAY
THURSDAY	6:00 AM WEDNESDAY UNTIL NOON MONDAY
FRIDAY OR SATURDAY	6:00 AM THURSDAY UNTIL NOON MONDAY

THE RESIDENT ENGINEER MUST NOTIFY TRAFFIC OPERATIONS NORTH IN ACCORDANCE WITH NEW JERSEY DEPARTMENT OF TRANSPORTATION POLICY AND PROCEDURE NUMBER 108 FOR ALL PLANNED LANE AND/OR SHOULDER CLOSURES, AND OTHER TRAFFIC IMPACTS.

2. TRAFFIC PAINT SHALL BE USED WHEN TRAFFIC STRIPES OR TRAFFIC MARKINGS ARE REQUIRED ON INTERMEDIATE PAVEMENT LAYERS THAT NEED TO BE OPEN TO TRAFFIC DUE TO STAGE CONSTRUCTION. REMOVABLE PAVEMENT MARKING TAPE SHALL BE USED WHERE LANE SHIFTS ARE REQUIRED ON TOP PAVEMENT LAYERS OR ON EXISTING PAVEMENT NOT BEING REPAVED. EXISTING STRIPES ON PAVEMENT NOT BEING REPAVED THAT CONFLICT WITH THE PLANNED TRAFFIC CONTROL SHALL BE COVERED WITH REMOVABLE BLACK LINE MASKING TAPE.
3. ACCESS TO ALL RESIDENTIAL AND COMMERCIAL PROPERTIES MUST BE MAINTAINED AT ALL TIMES. BUS STOP MUST BE MAINTAINED AT ALL TIMES.
4. ALL TEMPORARY SOLID STRIPING IS 4 INCH SOLID WHITE LINE OR 4 INCH SOLID YELLOW LINE UNLESS OTHERWISE NOTED ON PLANS. ALL TEMPORARY BROKEN STRIPING IS 4 INCH BROKEN WHITE LINE, 10 FEET LINE AND 30 FEET SPACE, UNLESS OTHERWISE NOTED ON PLANS.
5. ALL PRECAST CONCRETE CURB, CONSTRUCTION BARRIER, SHALL BE TYPE 4, JOINT CLASS A, UNLESS OTHERWISE NOTED ON PLANS.
6. ALL TEMPORARY STRIPING IS TO MEET AND TIE INTO EXISTING STRIPING UNLESS OTHERWISE NOTED ON PLANS.
7. EXISTING REGULATORY, WARNING AND GUIDE SIGNS SHALL BE RESET UNTIL THEY ARE REPLACED BY PROPOSED SIGNS OR NO LONGER APPLICABLE, AT THE DIRECTION OF THE ENGINEER.
8. PROPOSED REGULATORY, WARNING, AND GUIDE SIGNS SHALL BE INSTALLED AS SOON AS POSSIBLE, BUT SHALL REMAIN COVERED IF NOT APPLICABLE TO CONSTRUCTION STAGE CONFIGURATION, OR AT THE DIRECTION OF THE ENGINEER.
9. ON A WEEKLY BASIS, ALL PLANNED LANE AND/OR SHOULDER CLOSURES, AND OTHER TRAFFIC IMPACTS FOR THE SEVEN (7) DAY PERIOD STARTING ON THE FOLLOWING MONDAY SHALL BE SUBMITTED TO THE RESIDENT ENGINEER BY 8 AM OF EACH FRIDAY ON WEEKLY FORMS PROVIDED BY THE DEPARTMENT. THIS SUBMITTAL SHALL INCLUDE ALL TEMPORARY AND PERMANENT CLOSURES, STAGING CHANGES, DETOURS, AND OTHER TRAFFIC IMPACTING CHANGES. PERMANENT CLOSURES AND IMPACTS ARE THOSE THAT WILL BE CONTINUOUSLY IN PLACE FOR AT LEAST 24 HOURS.
10. EACH DAY OF TEMPORARY CLOSURES AND TRAFFIC IMPACTS SHALL BE SUBMITTED TO THE RESIDENT ENGINEER AT LEAST 24 HOURS IN ADVANCE OF THE CLOSURE OR TRAFFIC IMPACT ON DAILY FORMS PROVIDED BY THE DEPARTMENT.
11. ALL TEMPORARY WEEKEND CLOSURES SHALL BE SUBMITTED TO THE RESIDENT ENGINEER BY 8 AM ON THE PRECEEDING FRIDAY USING THE SAME FORMS FOR THE DAILY SUBMITTALS.
12. ANY DEVIATION FROM THE LANE CLOSURE SCHEDULE AND TRAFFIC PATTERNS PROVIDED IN THE CONTRACT DOCUMENTS INCLUDING BUT NOT LIMITED TO: CHANGE IN HOURS, USE OF LANE SHIFTS, SHOULDER CLOSURES, ALTERNATING TRAFFIC PATTERNS, MOVING OPERATIONS, AND TRAFFIC SLOW DOWNS, SHALL BE SUBMITTED IN WRITING TO THE RESIDENT ENGINEER AT LEAST EIGHT (8) DAYS IN ADVANCE OF THE PROPOSED CHANGE.
13. PORTABLE VARIBLE MESSAGE SIGNS SHALL BE PLACED IN REGIONAL LOCATIONS TO BE DETERMINED BY NJDOT TRAFFIC OPERATIONS NORTH.

GENERAL LEGEND

(NOT TO SCALE)

- BREAKAWAY BARRICADE
- BREAKAWAY BARRICADE WITH SIGN
- CONSTRUCTION SIGN
- DRUM
- CONE
- PRECAST OR MOVABLE CONCRETE CURB CONSTRUCTION BARRIER (TYPE SPECIFIED)
- DIRECTION OF TRAFFIC FLOW
- FLAGGER
- ILLUMINATED FLASHING ARROW MOUNTED ON TOWING VEHICLE SHOWING CAUTION MODE
- (LEFT RIGHT BOTH) ILLUMINATED FLASHING ARROW MOUNTED ON TOWING VEHICLE SHOWING ARROW PATTERN
- TRAFFIC CONTROL TRUCK WITH MOUNTED CRASH CUSHION AND ARROW BOARD SHOWING CAUTION MODE
- (LEFT RIGHT BOTH) TRAFFIC CONTROL TRUCK WITH MOUNTED CRASH CUSHION AND ARROW BOARD SHOWING ARROW PATTERN
- TEMPORARY CRASH CUSHION, INERTIAL BARRIER SYSTEM
- TEMPORARY CRASH CUSHION, QUADGUARD
- BUFFER ZONE
- TEMPORARY PAVEMENT
- WORK AREA
- PAINT STRIPING TRUCK OR OTHER OPERATING VEHICLE

STATE	FEDERAL PROJECT NO.
N.J.	

CONSTRUCTION SIGN TABLE

SIGN DESIGNATION	MESSAGE (DESCRIPTION)	SIZE IN. x IN.	AREA S.F.	REQUIRED QUANTITY IN NUMBER	TOTAL AREA S.F.
G20-2	END ROAD WORK	48 X 24	8.0	5	40
M3-1	NORTH	24 X 12	2.0	7	14
M3-3	SOUTH	24 X 12	2.0	6	12
M4-4	TRUCK	24 X 12	2.0	3	6
M4-8A	END DETOUR	24 X 18	3.0	1	3
M4-9L	DETOUR (LEFT ARROW)	30 X 24	5.0	3	15
M4-9N	BERGEN TPK	36 X 12	3.0	13	39
M4-9R	DETOUR (RIGHT ARROW)	30 X 24	5.0	4	20
M4-9RX	DETOUR (RIGHT ARROW)	30 X 24	5.0	4	20
M4-9X	DETOUR (THRU ARROW)	30 X 24	5.0	3	15
R1-1	STOP	30 X 30	6.3	2	12.6
R1-1(S)	STOP	48 X 48	16.0	6	96
R1-2	YIELD	36 X 36	3.9	2	7.8
R2-1(S)	SPEED LIMIT	48 X 60	20.0	4	80
R2-5A(S)	REDUCED SPEED AHEAD	48 X 60	20.0	4	80
R3-1	(NO RIGHT TURN)	24 X 24	4.0	1	4
R3-2	(NO LEFT TURN)	24 X 24	4.0	8	32
R(NJ)3-2A	(NO LEFT TURN)	42 X 12	3.5	2	7
R3-5R(MOD)	(RIGHT ARROW) ONLY	30 X 36	7.5	2	15
R3-7R	RIGHT LANE MUST TURN RIGHT	30 X 30	6.3	2	12.6
R3-8B	(LANE USE)	48 X 30	10.0	2	20
R(NJ)3-8C	(LANE USE)	48 X 30	10.0	1	10
R(NJ)3-8F	(LANE USE)	30 X 30	6.3	1	6.3
R(NJ)3-8I	(LANE USE)	30 X 30	6.3	2	12.6
R(NJ)3-8M	(LANE USE)	60 X 30	12.5	4	50
R(NJ)3-8R	(LANE USE)	30 X 30	6.3	2	12.6
R(NJ)3-8W	(LANE USE)	48 X 30	10.0	2	20
R(NJ)3-8RR	(LANE USE)	48 X 30	10.0	2	20
R4-9	STAY IN LANE	24 X 30	5.0	1	5
R5-1	DO NOT ENTER	30 X 30	6.3	3	18.9
R6-1L	ONE WAY (LEFT)	36 X 12	3.0	2	6
R6-1R	ONE WAY (RIGHT)	36 X 12	3.0	1	3
R9-3A	(NO PEDS)	18 X 18	2.3	4	9.2
R9-3BL	USE CROSSWALK (LEFT)	18 X 12	1.5	3	4.5
R9-3BR	USE CROSSWALK (RIGHT)	18 X 12	1.5	5	7.5
R9-9	SIDEWALK CLOSED	30 X 18	3.8	6	22.8
R9-10	SIDEWALK CLOSED USE *	24 X 12	2.0	2	4
R9-11L	SIDEWALK CLOSED AHEAD	48 X 30	10.0	1	10
R10-11A	NO TURN ON RED	24 X 30	5.0	1	5
R(NJ)10-13A	DELAYED GREEN	60 X 12	5.0	1	5
R11-2	ROAD CLOSED	48 X 30	10.0	2	20
SIGN A	GAS STATION NEXT RIGHT	48 X 24	8.0	1	8
SIGN CA	CARS	24 X 12	2.0	3	6
SIGN FD-NB	NORTHBOUND BERGEN*	48 X 24	8.0	1	8
SIGN FD-SB	SOUTHBOUND BERGEN*	48 X 24	8.0	1	8
SIGN LL	(LANE USE)	36 X 42	10.5	2	21
W1-4AL	(LEFT CURVE)	48 X 48	16.0	2	32
W1-4AR	(RIGHT CURVE)	48 X 48	16.0	1	16
W1-4BL(S)	(DOUBLE LEFT CURVE)	48 X 48	16.0	2	32
W1-4BR(S)	(DOUBLE RIGHT CURVE)	48 X 48	16.0	1	16
W1-6(L OR R)	ARROW (LEFT OR RIGHT)	48 X 24	8.0	22	176
W1-7	ARROW (TWO-WAY)	48 X 24	8.0	1	8
W3-1A(S)	(STOP AHEAD)	48 X 48	16.0	2	32
W4-2L(S)	(LEFT LANE ENDS)	48 X 48	16.0	4	64
W4-2R(S)	(RIGHT LANE ENDS)	48 X 48	16.0	4	64
W5-1(S)	ROAD NARROWS	48 X 48	16.0	7	112
W8-9A	(UNEVEN PAVEMENT)	48 X 48	16.0	4	64
W8-14A	GROOVED PAVEMENT	48 X 48	16.0	4	64
W9-2L(S)	LANE ENDS MERGE LEFT	48 X 48	16.0	2	32
W16-9P	AHEAD	24 X 12	2.0	2	4
W20-1A	ROAD WORK 1500 FT	48 X 48	16.0	6	96
W20-1B	ROAD WORK 1000 FT	48 X 48	16.0	4	64
W20-1C	ROAD WORK 500 FT	48 X 48	16.0	6	96
W20-1D(1 MILE)	ROAD WORK 1 MILE	48 X 48	16.0	4	64
W20-1D(1/2 MILE)	ROAD WORK 1/2 MILE	48 X 48	16.0	7	112
W20-1F	ROAD WORK AHEAD	48 X 48	16.0	13	208
W20-3C	ROAD CLOSED 500 FT	48 X 48	16.0	2	32
W20-3F	ROAD CLOSED AHEAD	48 X 48	16.0	2	32
W20-5AL	LEFT LANE CLOSED 1500 FT	48 X 48	16.0	4	64
W20-5BL	LEFT LANE CLOSED 1000 FT	48 X 48	16.0	4	64
W20-5AR	RIGHT LANE CLOSED 1500 FT	48 X 48	16.0	4	64
W20-5BR	RIGHT LANE CLOSED 1000 FT	48 X 48	16.0	3	48
W20-7A	(FLAGGER)	48 48	16.0	4	64
W20-7B	BE PREPARED TO STOP	48 48	16.0	4	64
W50-1C	EXIT 500 FT	60 48	20.0	4	80
W99-2	GIVE US A BRAKE	48 48	16.0	4	64
				SIGN TOTAL	2787

TCD-1
TCD-2

NEW JERSEY DEPARTMENT OF TRANSPORTATION

TRAFFIC CONTROL DETAILS

ROUTE U.S. 46 LITTLE FERRY CIRCLE

CONTRACT NO. 069950373

PARSONS BRINCKERHOFF, INC.
CERTIFICATION OF AUTHORIZATION NO. 24GA28029800

STEWART R. GORDON
N.J. PROFESSIONAL ENGINEER NO. 24GE03660800

PARSONS BRINCKERHOFF CADD DATA

OPERATOR	Carnevale	QUEUE	\\ompr1prt01\PRIPL03_BW_IP
PLOT DATE	07-MAR-2013 15:15		
PENTABLE	enx.tbl		
DESIGN FILE	T:\20063\Trf\tcd01.dgn		

STATE	FEDERAL PROJECT NO.
N.J.	

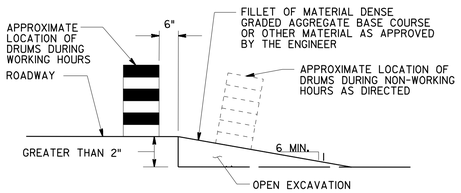

NOTE:
ESCAPE RAMPS MUST BE CONSTRUCTED PRIOR TO NON-WORKING HOURS AND MAINTAINED DURING NON-WORKING HOURS WHERE A VERTICAL DROP OF GREATER THAN 2 INCHES EXISTS ADJACENT TO A TRAVELED LINE.

ESCAPE RAMP DETAIL

N.T.S.

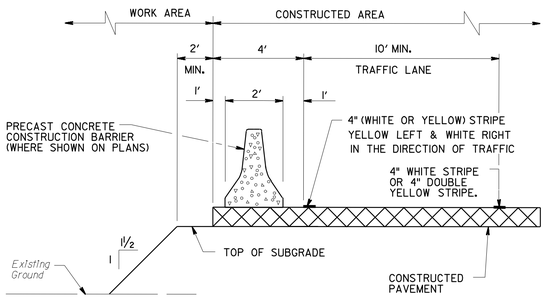

TYPICAL SECTION
PLACEMENT OF PRECAST CONCRETE CONSTRUCTION BARRIER

N.T.S.

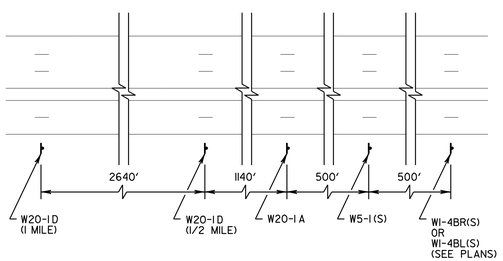

ADVANCE SIGNING DETAIL

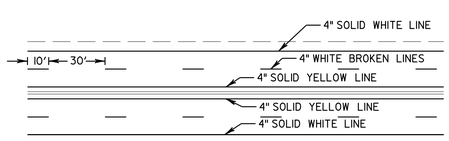

STRIPING DETAIL
DIVIDED ROADWAYS
TYPICAL LONGITUDINAL STRIPING

N.T.S.

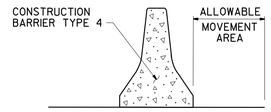

JOINT CLASS	ALLOWABLE MOVEMENT
A	OVER 16 TO 20 INCHES
B	11 TO 16 INCHES
C	LESS THAN 11 INCHES
D	NO MOVEMENT

NOTES:
1. CHANGES TO THE PROPOSED JOINT CLASS AT ANY LOCATION MUST BE APPROVED BY THE ENGINEER.
2. NO WORK OR STORAGE OF MATERIALS WILL BE PERMITTED IN THE ALLOWABLE MOVEMENT AREA.

CONSTRUCTION BARRIER, TYPE 4
JOINT CLASS AND ALLOWABLE MOVEMENT

N.T.S.

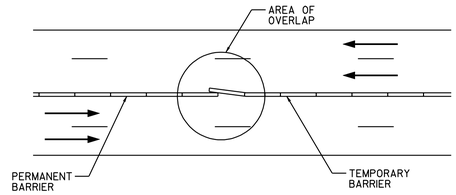

TEMPORARY BARRIER TO BE TAPERED INTO SHOULDER AND OVERLAP PERMANENT BARRIER WITH NO BLUNT ENDS FACING TRAFFIC

BARRIER OVERLAP DETAIL

N.T.S.

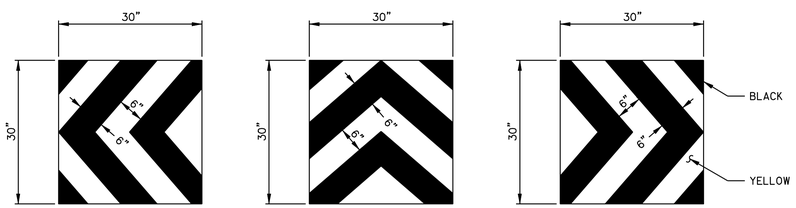

WHERE TRAFFIC PASSES TO LEFT SIDE | WHERE TRAFFIC PASSES TO EITHER SIDE | WHERE TRAFFIC PASSES TO RIGHT SIDE

NOTE:
AT ALL LOCATIONS WHERE CRASH CUSHIONS ARE USED, ON THE SMOOTH SURFACE OF THE "BELLY BAND" OF HYDROCELL TYPES AND ENERGY BARRELS, INSTALL 30" X 30" PIECE OF HIGH INTENSITY COLD APPLICATION, HITACK OR SUPER HITACK SHEETING WITH EITHER OF THE THREE APPROPRIATE CROSS HATCHING SCHEMES SHOWN ABOVE ON EACH TYPE BARRELS. DUE TO RIDGED SURFACE, THE SHEETING MAY HAVE TO BE MOUNTED ON "LIGHT" STOCK AND BE POP-RIVETED ONTO THE LEAD DRUM. THESE PANELS MAY ALSO BE USED ON BEAM GUIDE RAIL ENDS.

REFLECTIVE SHEETING DETAIL

N.T.S.

SIGN LEGEND

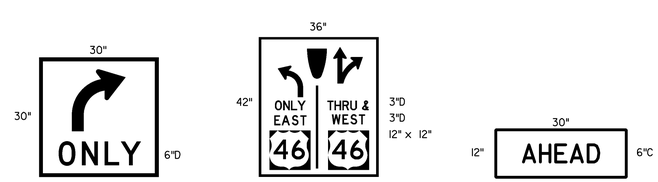

SIGN R3-5 (MOD)
7.5 S.F.
BLACK ON WHITE

SIGN LL
10.5 S.F.
BLACK ON WHITE

R(NJ)3-8Z
2.5 S.F.
BLACK ON ORANGE

REGULATORY APPROACH SPEED OF TRAFFIC	RECOMMENDED SIGHT DISTANCE TO BEGINNING OF CHANNELIZING TAPERS		
	DESIRABLE		MINIMUM
	RURAL	URBAN	RURAL AND URBAN
MILES/HOUR	FEET	FEET	FEET
25	375	525	150
30	450	625	200
35	525	725	250
40	600	825	325
45	675	925	400
50	750	1025	475
55	875	1150	550
60	1000	1275	650
65	1050		725

NOTES:
1. AVOIDANCE MANEUVER IS FOR A SPEED, PATH, AND/OR DIRECTION CHANGE PRIOR TO THE BEGINNING OF CHANNELING TAPERS.
2. RECOMMENDED DISTANCES BETWEEN TWO SEPARATE LANE CLOSURES SHALL BE DOUBLE THE VALUES SHOWN ABOVE.
3. RURAL AND URBAN ROAD DESIGNATIONS SHALL BE AS DEFINED IN THE NJDOT STATE HIGHWAY STRAIGHT LINE DIAGRAMS. THIS PROJECT IS DESIGNATED AS URBAN.
4. DESIRABLE VALUES SHALL BE PROVIDED WHEREVER POSSIBLE. IF IT IS NOT FEASIBLE OR PRACTICAL TO PROVIDE DESIRABLE VALUES BECAUSE OF HORIZONTAL OR VERTICAL CURVATURE OR IF RELOCATION OF THE RAPER IS NOT POSSIBLE, THEN MINIMUM VALUES CAN BE APPLIED. WHEN MINIMUM VALUES ARE USED, SPECIAL ATTENTION SHOULD BE GIVEN TO THE USE OF SUITABLE TRAFFIC CONTROL DEVICES FOR PROVIDING ADVANCED WARNING OF THE CONDITIONS THAT ARE LIKELY TO BE ENCOUNTERED.
5. TAPERS SHALL BE LOCATED TO MAXIMIZE THE VISIBILITY OF THEIR TOTAL LENGTH.

CONSTRUCTION BARRIER TABLE		
STAGE	LOCATION	JOINT CLASS
I, II, IV	BERGEN TURNPIKE AT LAKEVIEW - 320 LF	A
II	STA. 98+00 TO STA 100+80	A
II	STA. 100+00 TO STA 117+60	D
III	STA. 95+40 TO STA 100+80	A
III	STA. 100+00 TO STA 117+60	B

RECOMMENDED TAPER LENGTH AND SPACING FOR CHANNELIZING TAPERS						RECOMMENDED SPACING ALONG TANGENTS
REGULATORY APPROACH SPEED OF TRAFFIC IN MILESHOUR	MINIMUM TAPER RATIO IN LENGTH PER METER OF WIDTH	MINIMUM TAPER LENGTH L-FOR LANE WIDTHS 10'	11'	12'	MAXIMUM DEVICE (B) SPACING ALONG TAPERS IN FEET	MAXIMUM DEVICE (D) SPACING ALONG TANGENTS IN FEET
25	10.5:1	105	115	125	25	50
30	15:1	150	165	180	30	60
35	20.5:1	205	225	245	35	70
40	27:1	270	300	325	40	80
45	45:1	450	495	540	45	90
50	50:1	500	550	600	50	100
55	55:1	550	605	660	55	110
60	60:1	600	660	720	60	120
65	65:1	650	715	780	65	130

NOTE:
1. THE MAXIMUM DEVICE SPACING ALONG CURVES SHALL BE AS DEFINED FOR TAPERS (B) IN THE ABOVE TABLE.

TCD-2 / TCD-2

NEW JERSEY DEPARTMENT OF TRANSPORTATION

TRAFFIC CONTROL DETAILS

ROUTE U.S. 46 LITTLE FERRY CIRCLE

CONTRACT NO. 069950373

PARSONS BRINCKERHOFF, INC.
CERTIFICATION OF AUTHORIZATION NO. 24GA28029800

STEWART R. GORDON
N.J. PROFESSIONAL ENGINEER NO. 24GE03660800

41

PARSONS BRINCKERHOFF CADD DATA

OPERATOR	Carnevale	QUEUE	\\ampr1pr-t01\PRIPL03_BW_P
PLOT DATE	07-MAR-2013 15:15		
PENTABLE	ehx.tbl		
DESIGN FILE	T:\20063\Trf\tcd02.dgn		

STATE	FEDERAL PROJECT NO.
N.J.	

STAGING SEQUENCE:

STAGE I

1. PSE&G ELECTRIC TO RAISE EXISTING AERIAL ELECTRIC LINES RUNNING NORTH/SOUTH THROUGH THE CIRCLE INFIELD TO PROVIDE REQUIRED CLEARANCE FOR TEMPORARY SIGNAL AND SIGNAL SPAN WIRES.
2. CONSTRUCT TEMPORARY SIGNAL.
3. CONSTRUCT TEMPORARY DRAINAGE WITHIN SOUTHERLY INFIELD OF EXISTING CIRCLE.
4. CONSTRUCT PORTION OF FULL DEPTH PAVEMENT BOX, FLUSH WITH EXISTING PAVEMENT, IN AREAS SPECIFIED ON PLANS AS FOLLOWS:

   3" MIN. HMA INTERMEDIATE COURSE

   5" HMA BASE COURSE

   8" DENSE GRADED AGGREGATE BASE COURSE

   8" SUBBASE
5. TRAFFIC TO BE MAINTAINED AT EXISTING PAVEMENT ELEVATIONS DURING SUBSEQUENT STAGE II AND III OPERATIONS UNTIL VARIABLE DEPTH HMA OVERLAY IS CONSTRUCTED AT THE END OF STAGE III.
6. MAINTAIN EXISTING ITS FACILITY UNTIL PERMANENT ITS FACILITY IS CONSTRUCTED AND OPERATIONAL.
7. EXISTING HIGHWAY LIGHTING TO BE MAINTAINED UNTIL TEMPORARY SIGNAL AND HIGHWAY LIGHTING IS OPERATIONAL.
8. REMOVE CONCRETE MEDIAN ISLAND.
9. CONSTRUCT MEDIAN PAVEMENT.
10. PLACE TEMPORARY SHIELDING BELOW THE BRIDGE TO PROTECT TRAFFIC ON MAIN STREET. USE THE TRAFFIC CONTROL CONFIGURATION IN NJDOT TRAFFIC CONTROL STANDARD DRAWING TCD-4: TWO LANES, UNDIVIDED, LANE AND SHOULDER CLOSING WITH FLAGGING.

STAGE II

1. INSTALL DETOUR SIGNAGE TO ACCOMMODATE LEFT TURNS FROM ROUTE 46 EASTBOUND TO BERGEN TURNPIKE NORTHBOUND AND FROM ROUTE 46 WESTBOUND TO BERGEN TURNPIKE SOUTHBOUND.
2. SHIFT TRAFFIC INTO INTERSECTION PATTERN AT ROUTE 46 AND BERGEN TURNPIKE.
3. TEMPORARY TRAFFIC SIGNAL IS OPERATIONAL.
4. DEMOLISH AND REMOVE EXISTING BRIDGE DECK AND SIDEWALK (NORTHSIDE). (THIS WORK CANNOT BE PERFORMED BEFORE FEBRUARY 3, 2014)
5. CONSTRUCT PROPOSED NEW BRIDGE DECK AND SIDEWALK.
6. CONSTRUCT GUIDE RAIL ON RT. 46 WESTBOUND.
7. REMOVE EXISTING TRAFFIC SIGNAL.
8. CONSTRUCT TEMPORARY DRAINAGE AROUND PROPOSED PUMP STATION FOOTPRINT.
9. CONSTRUCT PROPOSED PUMP STATION AND OUTFALL.
10. CONSTRUCT PROPOSED DRAINAGE ALONG PROPOSED BERGEN TURNPIKE'S NORTHBOUND CURB LINE.
11. PSE&G TO CONSTRUCT PERMANENT UTILITY FACILITIES ALONG BERGEN'S TURNPIKE'S NORTHBOUND CURB LINE FOLLOWING THE COMPLETION OF DRAINAGE CONSTRUCTION.

STAGE III

1. MAINTAIN DETOUR ESTABLISHED IN STAGE I .
2. MAINTAIN TEMPORARY TRAFFIC SIGNAL.
3. PLACE TRAFFIC CONTROL DEVICES AS SHOWN.
4. REMOVE TEMPORARY PAVEMENT.
5. MILL AND RESURFACE TO FINAL GRADE FROM EAST ABUTMENT TO STA. 120+10.
6. DEMOLISH AND REMOVE EXISTING BRIDGE DECK AND SIDEWALK (SOUTHSIDE). (THIS WORK CANNOT BE PERFORMED BEFORE FEBRUARY 3, 2014)
7. CONSTRUCT PROPOSED SANITARY SEWER ALONG BERGEN TURNPIKE BETWEEN ROUTE 46 AND LAKEVIEW AVENUE.
8. CONSTRUCT PROPOSED DRAINAGE ALONG ROUTE 46 WESTBOUND BETWEEN STA. 95+00 AND 99+00 TO FINAL ELEVATION, PROTECT WITH TEMPORARY CONSTRUCTION BARRIER.
9. CONSTRUCT VARIABLE DEPTH HMA INTERMEDIATE COURSE ALONG ROUTE 46 AND BERGEN TURNPIKE APPROACHES IN LIFTS TO BOTTOM OF 2" THICK HMA SURFACE COURSE. EACH LIFT SHALL BE FEATHERED TO MEETING EXISTING PAVEMENT AND PROVIDE A SMOOTH TRANSITION FOR TRAFFIC.
10. BEGIN CONSTRUCTION OF PERMANENT TRAFFIC SIGNAL AND HIGHWAY LIGHTING.

STAGE IV

1. MAINTAIN TEMPORARY TRAFFIC SIGNAL UNTIL FINAL TRAFFIC PATTERNS/PERMANENT TRAFFIC SIGNAL INSTALLATION IS COMPLETE.
2. CONSTRUCT FULL DEPTH PAVEMENT IN AREAS SPECIFIED ON PLANS.
3. CONSTRUCT ISLANDS ALONG BERGEN TURNPIKE, SOUTH OF CIRCLE.
4. RECONSTRUCT ISLAND ALONG BERGEN TURNPIKE, NORTH OF LAKEVIEW AVENUE/VALLEY ROAD INTERSECTION.
5. RESTORE CONCRETE MEDIAN ISLAND.
6. REMOVE TEMPORARY SHIELDING ON BRIDGE. USE THE TRAFFIC CONTROL CONFIGUATION IN NJDOT TRAFFIC CONTROL STANDARD DRAWING TCD-; TWO LANES, UNDIVIDED, LANE AND SHOULDER CLOSING WITH FLAGGING.
7. MILL AND RESURFACE TO FINAL GRADE FROM EAST ABUTMENT TO STA. 120+10.
8. REMOVE TEMPORARY SHIELDING ON BRIDGE. USE THE TRAFFIC CONTROL CONFIGURATION IN NJDOT TRAFFIC CONTROL STANDARD DRAWING TCD-4: TWO LANES, UNDIVIDED, LANE AND SHOULDER CLSOING WITH FLAGGING.
9. PERFORM FINAL PAVING OF HMA SURFACE COURSE ON ALL ROADWAYS.
10. INSTALL PERMANENT SIGNING AND STRIPING.

PARSONS BRINCKERHOFF CADD DATA

OPERATOR	Carnevale	QUEUE	\\ampr1pr-t01\PRIPL03_BW1.IP
PLOT DATE	07-MAR-2013 15:15		
PENTABLE	ehx.tbl		
DESIGN FILE	T:\20063\Tr-t\tc01.dgn		

TC-1 / TC-18

NEW JERSEY DEPARTMENT OF TRANSPORTATION

TRAFFIC CONTROL AND STAGING PLAN

ROUTE U.S. 46 LITTLE FERRY CIRCLE

CONTRACT NO. 069950373

PARSONS BRINCKERHOFF, INC.
CERTIFICATION OF AUTHORIZATION NO. 24GA28029800

STEWART R. GORDON
N.J. PROFESSIONAL ENGINEER NO. 24GE03660800

STATE	FEDERAL PROJECT NO.
N.J.	

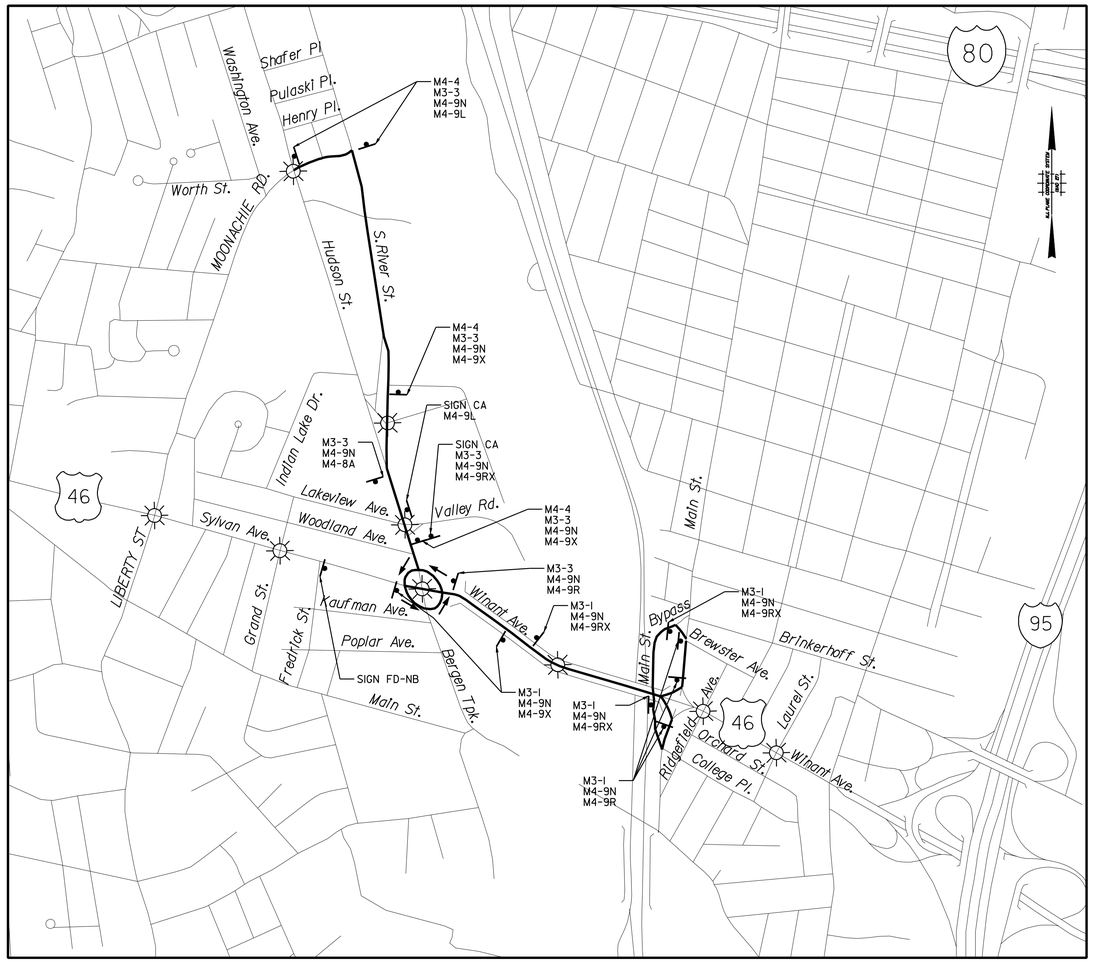

SIGN LEGEND

ALL DETOUR SIGNS ARE BLACK ON ORANGE

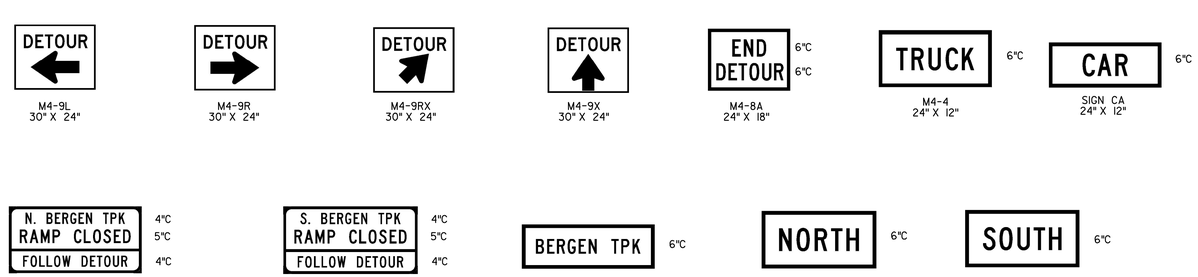

GENERAL NOTES:

1. WITH TEMPORARY SIGNAL OPERATIONAL, NO LEFT TURNS WILL BE PERMITTED FROM ROUTE 46 TO BERGEN TURNPIKE.
2. EASTBOUND TRAFFIC (CARS AND TRUCKS) WILL BE DETOURED TO THE MAIN STREET/BYPASS INTERCHANGE.
3. WESTBOUND CARS WILL BE DETOURED TO VALLEY ROAD VIA BERGEN TURNPIKE NORTHBOUND.
4. WESTBOUND TRUCKS WILL BE DETOURED TO MOONACHIE STREET VIA SOUTH RIVER STREET.
5. SIGNS ON BRIDGE TO BE MOUNTED ON LIGHT POLES WHERE POSSIBLE.

STAGE II
STAGE III
DETOUR SIGNING

TC-2
TC-18

NEW JERSEY DEPARTMENT OF TRANSPORTATION

TRAFFIC CONTROL AND STAGING PLAN

ROUTE U.S. 46 LITTLE FERRY CIRCLE

CONTRACT NO. 069950373

PARSONS BRINCKERHOFF, INC.
CERTIFICATION OF AUTHORIZATION NO. 24GA28029800

STEWART R. GORDON
N.J. PROFESSIONAL ENGINEER NO. 24GE03660800

PARSONS BRINCKERHOFF CADD DATA

OPERATOR	Carnevale	QUEUE	\\ampr1pr-t01\PRIPL03_BW.IP
PLOT DATE	07-MAR-2013 15:15		
PENTABLE	ehx.tbl		
DESIGN FILE	T:\20063\Trf\tc02.dgn		

BOROUGH OF LITTLE FERRY

COUNTY OF BERGEN

STATE	FEDERAL PROJECT NO.
N.J.	

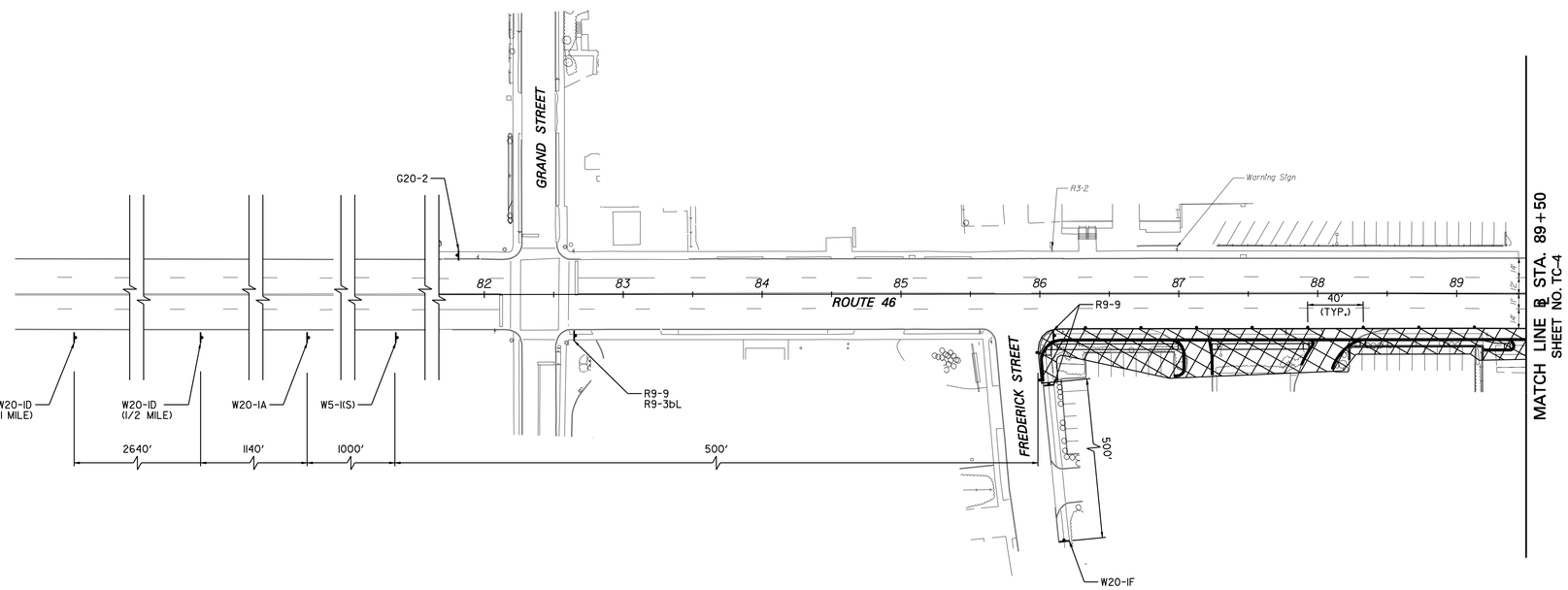

STAGE I

SCALE IN FEET

50' 0 50' 100'

TC-3
TC-18

NEW JERSEY DEPARTMENT OF TRANSPORTATION

TRAFFIC CONTROL AND STAGING PLAN

ROUTE U.S. 46 LITTLE FERRY CIRCLE

CONTRACT NO. 069950373

PARSONS BRINCKERHOFF, INC.
CERTIFICATION OF AUTHORIZATION NO. 24GA28029800

STEWART R. GORDON
N.J. PROFESSIONAL ENGINEER NO. 24GE03660800

44

NOTE:

1. CONTRACTOR TO MAINTAIN ACCESS TO DRIVEWAYS DURING CONSTRUCTION. MAXIMUM 8% GRADE.

PARSONS BRINCKERHOFF CADD DATA

OPERATOR	Carnevale	QUEUE	\\ampr1pr-t01\PRIPL03_BW.IP
PLOT DATE	07-MAR-2013 15:15		
PENTABLE	ehx.tbl		
DESIGN FILE	T:\20063\Tr-f\tc03.dgn		

STATE	FEDERAL PROJECT NO.
N.J.	

BOROUGH OF LITTLE FERRY

COUNTY OF BERGEN

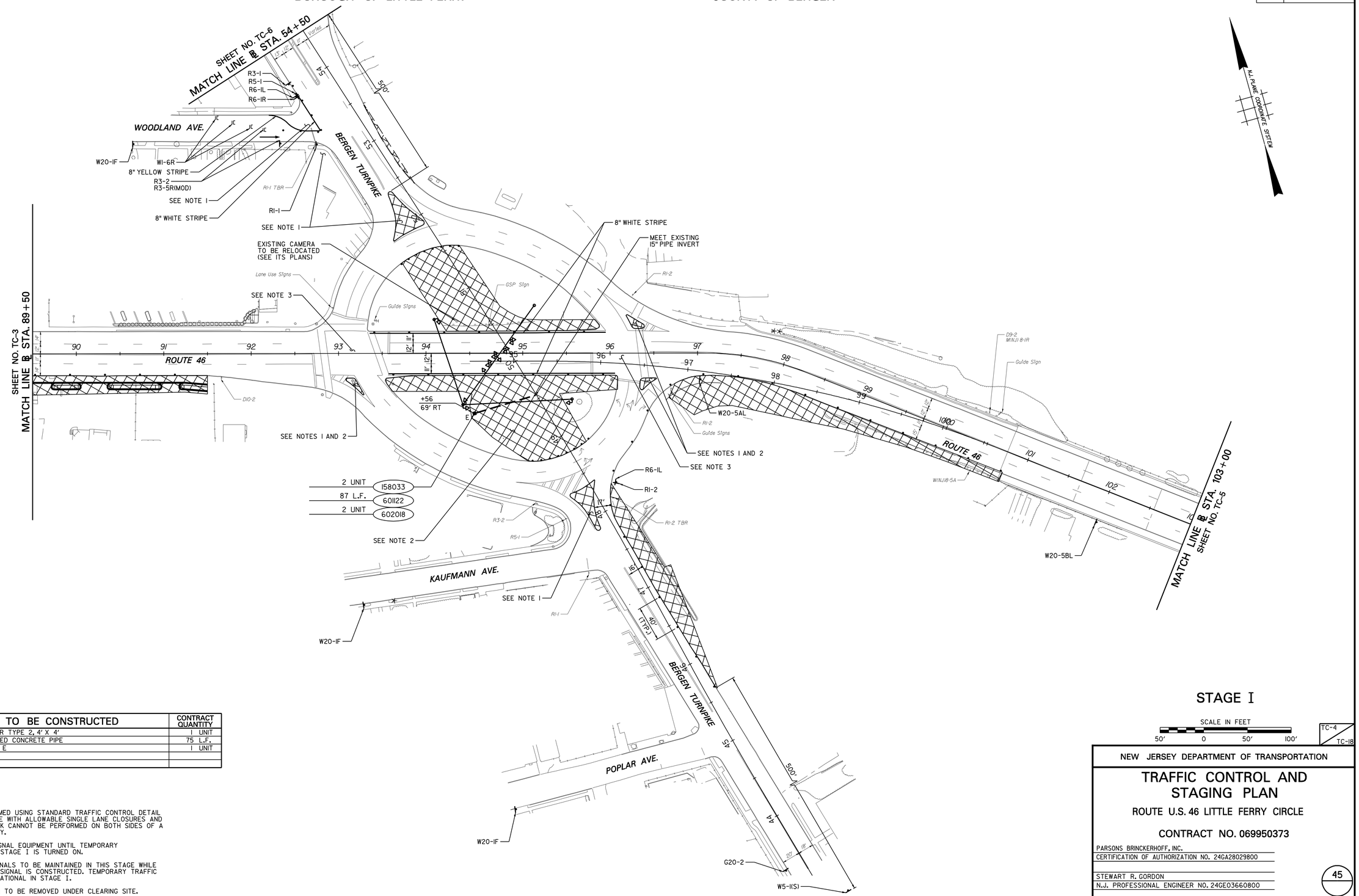

ITEM NO.	TO BE CONSTRUCTED	CONTRACT QUANTITY
158033M	INLET FILTER TYPE 2, 4' X 4'	1 UNIT
601122P	15" REINFORCED CONCRETE PIPE	75 L.F.
602018M	INLET, TYPE E	1 UNIT

NOTES:

1. WORK TO BE PERFORMED USING STANDARD TRAFFIC CONTROL DETAIL TCD-5 IN ACCORDANCE WITH ALLOWABLE SINGLE LANE CLOSURES AND GENERAL NOTES. WORK CANNOT BE PERFORMED ON BOTH SIDES OF A ROAD SIMULTANEOUSLY.
2. MAINTAIN EXISTING SIGNAL EQUIPMENT UNTIL TEMPORARY TRAFFIC SIGNAL FOR STAGE 1 IS TURNED ON.
3. EXISTING TRAFFIC SIGNALS TO BE MAINTAINED IN THIS STAGE WHILE TEMPORARY TRAFFIC SIGNAL IS CONSTRUCTED. TEMPORARY TRAFFIC SIGNAL WILL BE OPERATIONAL IN STAGE 1.
4. TEMPORARY DRAINAGE TO BE REMOVED UNDER CLEARING SITE.

STAGE I

SCALE IN FEET
50' 0 50' 100'

TC-4
TC-1B

NEW JERSEY DEPARTMENT OF TRANSPORTATION

TRAFFIC CONTROL AND STAGING PLAN

ROUTE U.S. 46 LITTLE FERRY CIRCLE

CONTRACT NO. 069950373

PARSONS BRINCKERHOFF, INC.
CERTIFICATION OF AUTHORIZATION NO. 24GA28029800

STEWART R. GORDON
N.J. PROFESSIONAL ENGINEER NO. 24GE03660800

PARSONS BRINCKERHOFF CADD DATA
OPERATOR Carnevale QUEUE \\ampr1pr101\PRIPL03_BW.IP
PLOT DATE 07-MAR-2013 15:15
PENTABLE etx.tbl
DESIGN FILE T:\20063\Trf\tc04.dgn

STATE	FEDERAL PROJECT NO.
N.J.	

BOROUGH OF LITTLE FERRY
VILLAGE OF RIDGEFIELD PARK

COUNTY OF BERGEN

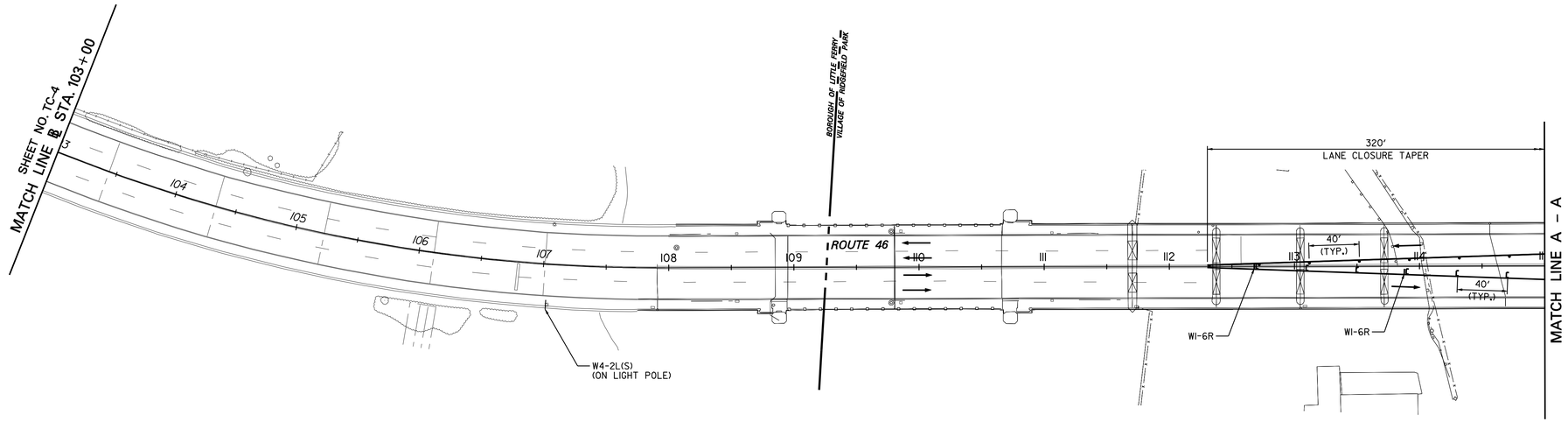

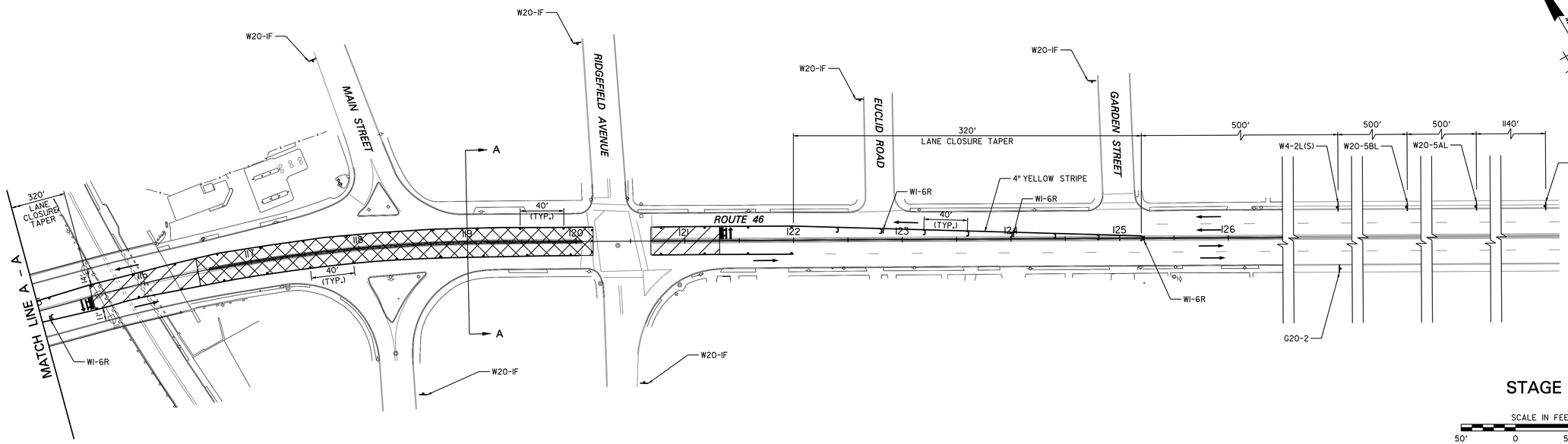

STAGE I

SCALE IN FEET
50' 0 50' 100'

TC-5
TC-18

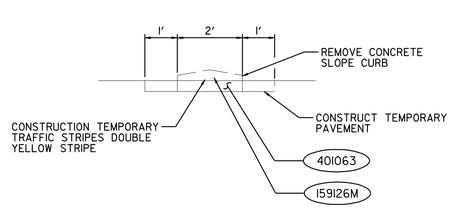

MEDIAN PAVEMENT DETAIL
N.T.S.

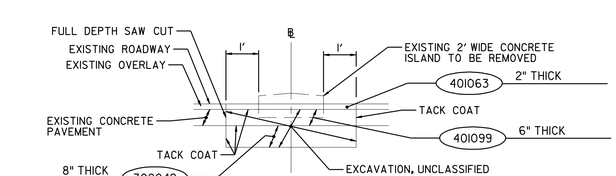

SECTION A–A
STAGE I MEDIAN PAVEMENT
N.T.S.

SEQUENCE NO.	TO BE CONSTRUCTED	CONTRACT QUANTITY
202009P	EXCAVATION, UNCLASSIFIED	73 C.Y.
302042P	DENSE GRADED AGGREGATE BASE COURSE, 8" THICK	154 S.Y.
401063M	HOT MIX ASPHALT 12.5, 76 SURFACE COURSE	18 TON
401099M	HOT MIX ASPHALT 25M 64 BASE COURSE	52 TON
607054P	12" X 3" CONCRETE SLOPING CURB, DOWELLED	692 L.F.

NEW JERSEY DEPARTMENT OF TRANSPORTATION

TRAFFIC CONTROL AND STAGING PLAN

ROUTE U.S. 46 LITTLE FERRY CIRCLE

CONTRACT NO. 069950373

PARSONS BRINCKERHOFF, INC.
CERTIFICATION OF AUTHORIZATION NO. 24GA28029800

STEWART R. GORDON
N.J. PROFESSIONAL ENGINEER NO. 24GE03660800

PARSONS BRINCKERHOFF CADD DATA
OPERATOR Carnevale QUEUE \\ampr|pr+01\PRIPL03.BW.IP
PLOT DATE 07-MAR-2013 15:15
PENTABLE ehx.tbl
DESIGN FILE T:\20063\Tr+F\tc05.dgn

STATE	FEDERAL PROJECT NO.
N.J.	

BOROUGH OF LITTLE FERRY

COUNTY OF BERGEN

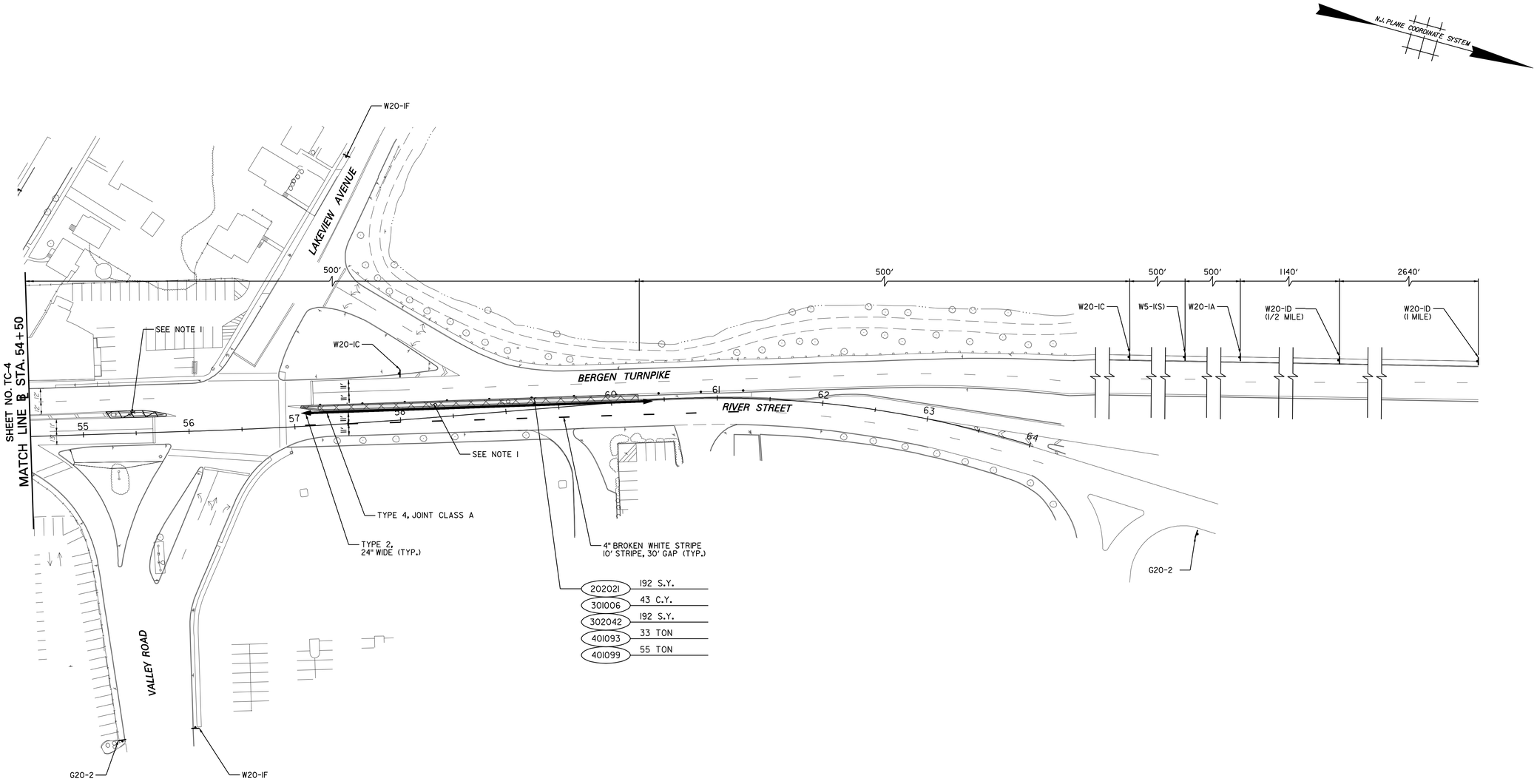

NOTES:

1. WORK TO BE PERFORMED USING STANDARD TRAFFIC CONTROL DETAIL TCD-15 IN ACCORDANCE WITH ALLOWABLE SINGLE LANE CLOSURES AND GENERAL NOTES. WORK CANNOT BE PERFORMED ON BOTH SIDES OF A ROAD SIMULTANEOUSLY.

ITEM NO.	TO BE CONSTRUCTED	CONTRACT QUANTITY
202021P	REMOVAL OF PAVEMENT	192 S.Y.
301006P	SUBBASE	43 C.Y.
302042P	DENSE-GRADED AGGREGATE BASE COURSE, 8" THICK	192 S.Y.
401093M	HOT MIX ASPHALT 19M76 INTERMEDIATE COURSE	33 TON
401099M	HOT MIX ASPHALT 25M64 BASE COURSE	55 TON

STAGE I

SCALE IN FEET

50' 0 50' 100'

TC-6 / TC-18

NEW JERSEY DEPARTMENT OF TRANSPORTATION

TRAFFIC CONTROL AND STAGING PLAN

ROUTE U.S. 46 LITTLE FERRY CIRCLE

CONTRACT NO. 069950373

PARSONS BRINCKERHOFF, INC.

CERTIFICATION OF AUTHORIZATION NO. 24GA28029800

STEWART R. GORDON

N.J. PROFESSIONAL ENGINEER NO. 24GE03660800

PARSONS BRINCKERHOFF CADD DATA

OPERATOR	Carnevale	QUEUE	\\ampr1pr-t01\PRIPL03.BW\JP
PLOT DATE	07-MAR-2013 15:15		
PENTABLE	ehx.tbl		
DESIGN FILE	T:\20063\Trf\tc06.dgn		

STATE	FEDERAL PROJECT NO.
N.J.	

BOROUGH OF LITTLE FERRY

COUNTY OF BERGEN

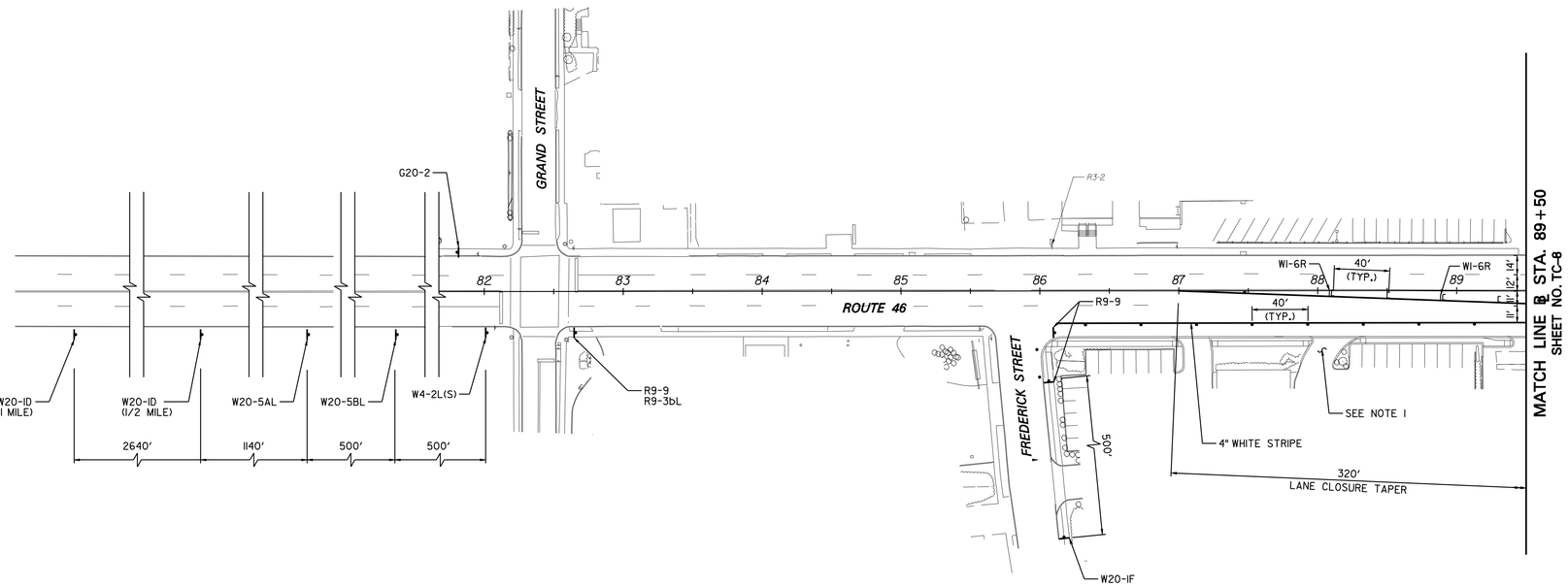

STAGE II

SCALE IN FEET

50' 0 50' 100'

TC-7 / TC-18

NEW JERSEY DEPARTMENT OF TRANSPORTATION

TRAFFIC CONTROL AND STAGING PLAN

ROUTE U.S. 46 LITTLE FERRY CIRCLE

CONTRACT NO. 069950373

PARSONS BRINCKERHOFF, INC.
CERTIFICATION OF AUTHORIZATION NO. 24GA28029800

STEWART R. GORDON
N.J. PROFESSIONAL ENGINEER NO. 24GE03660800

48

NOTE:

1. CONTRACTOR TO MAINTAIN ACCESS TO DRIVEWAYS DURING CONSTRUCTION. MAXIMUM 8% GRADE.

PARSONS BRINCKERHOFF CADD DATA

OPERATOR	Carnevale	QUEUE	\\ampr1pr-t01\PRIPL03_BW.IP
PLOT DATE	07-MAR-2013 15:15		
PENTABLE	ehx.tbl		
DESIGN FILE	T:\20063\Tr-f\tc07.dgn		

STATE	FEDERAL PROJECT NO.
N.J.	

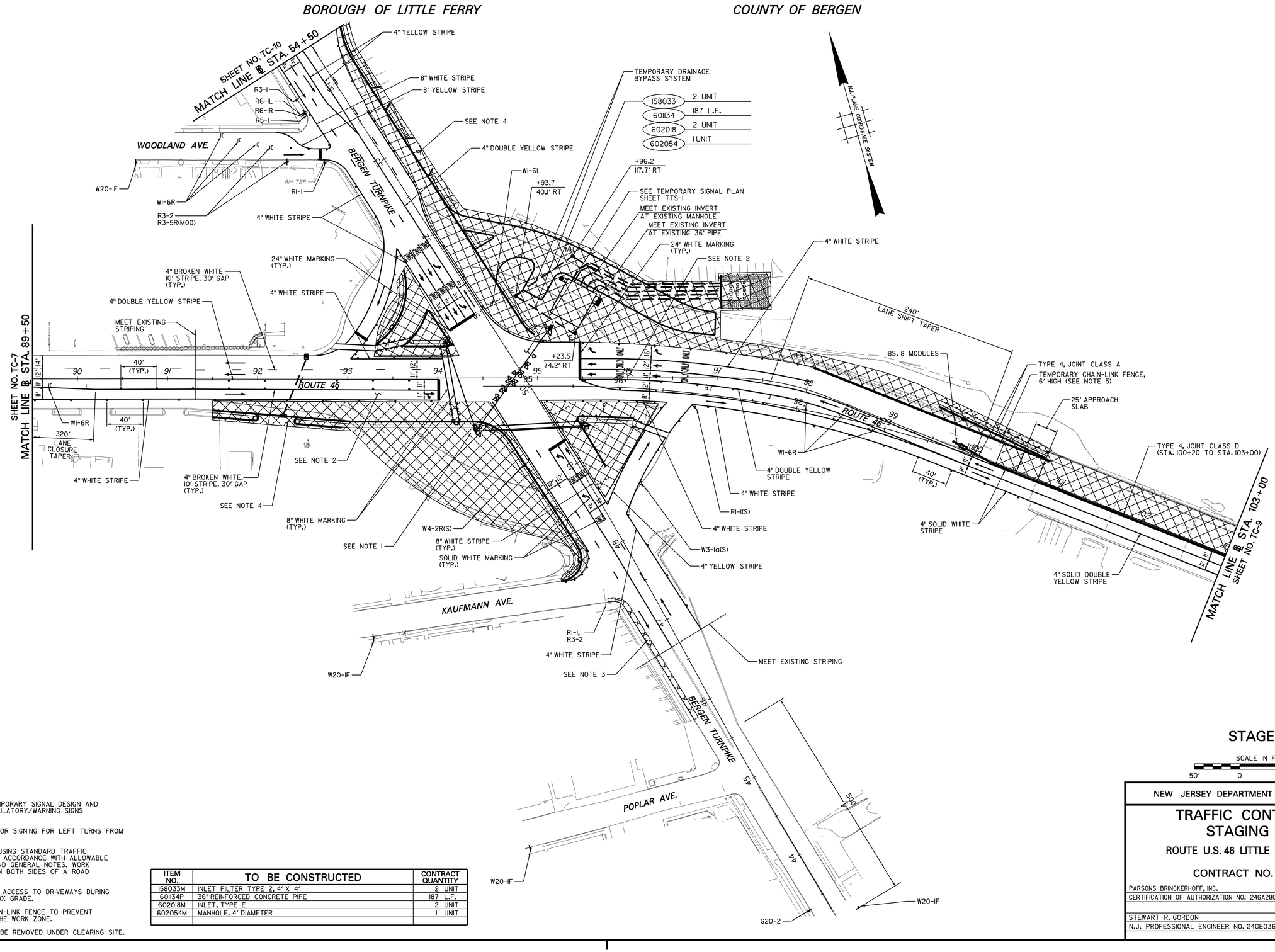

NOTES:

1. SEE SHEET TTS-1 FOR TEMPORARY SIGNAL DESIGN AND OPERATION, INCLUDING REGULATORY/WARNING SIGNS AND LANE WIDTHS.
2. SEE TC-2 DETOUR PLAN FOR SIGNING FOR LEFT TURNS FROM ROUTE 46.
3. WORK TO BE PERFORMED USING STANDARD TRAFFIC CONTROL DETAIL TCD-3 IN ACCORDANCE WITH ALLOWABLE SINGLE LANE CLOSURES AND GENERAL NOTES. WORK CANNOT BE PERFORMED ON BOTH SIDES OF A ROAD SIMULTANEOUSLY.
4. CONTRACTOR TO MAINTAIN ACCESS TO DRIVEWAYS DURING CONSTRUCTION. MAXIMUM 8% GRADE.
5. ERECT AND MAINTAIN CHAIN-LINK FENCE TO PREVENT PEDESTRIAN ACCESS TO THE WORK ZONE.
6. TEMPORARY DRAINAGE TO BE REMOVED UNDER CLEARING SITE.

ITEM NO.	TO BE CONSTRUCTED	CONTRACT QUANTITY
158033M	INLET FILTER TYPE 2, 4' X 4'	2 UNIT
601134P	36" REINFORCED CONCRETE PIPE	187 L.F.
602018M	INLET, TYPE E	2 UNIT
602054M	MANHOLE, 4' DIAMETER	1 UNIT

STAGE II

SCALE IN FEET
50' 0 50' 100'

TC-8
TC-18

NEW JERSEY DEPARTMENT OF TRANSPORTATION

TRAFFIC CONTROL AND STAGING PLAN

ROUTE U.S. 46 LITTLE FERRY CIRCLE

CONTRACT NO. 069950373

PARSONS BRINCKERHOFF, INC.
CERTIFICATION OF AUTHORIZATION NO. 24GA28029800

STEWART R. GORDON
N.J. PROFESSIONAL ENGINEER NO. 24GE03660800

PARSONS BRINCKERHOFF CADD DATA

OPERATOR	Carnevale	OUEUE	\\ampr1pr-t01\PRIPL03_BW.IP
PLOT DATE	07-MAR-2013 15:15		
PENTABLE	etx.tbl		
DESIGN FILE	T:\20063\Trf\tc08.dgn		

BOROUGH OF LITTLE FERRY
VILLAGE OF RIDGEFIELD PARK

COUNTY OF BERGEN

STATE	FEDERAL PROJECT NO.
N.J.	

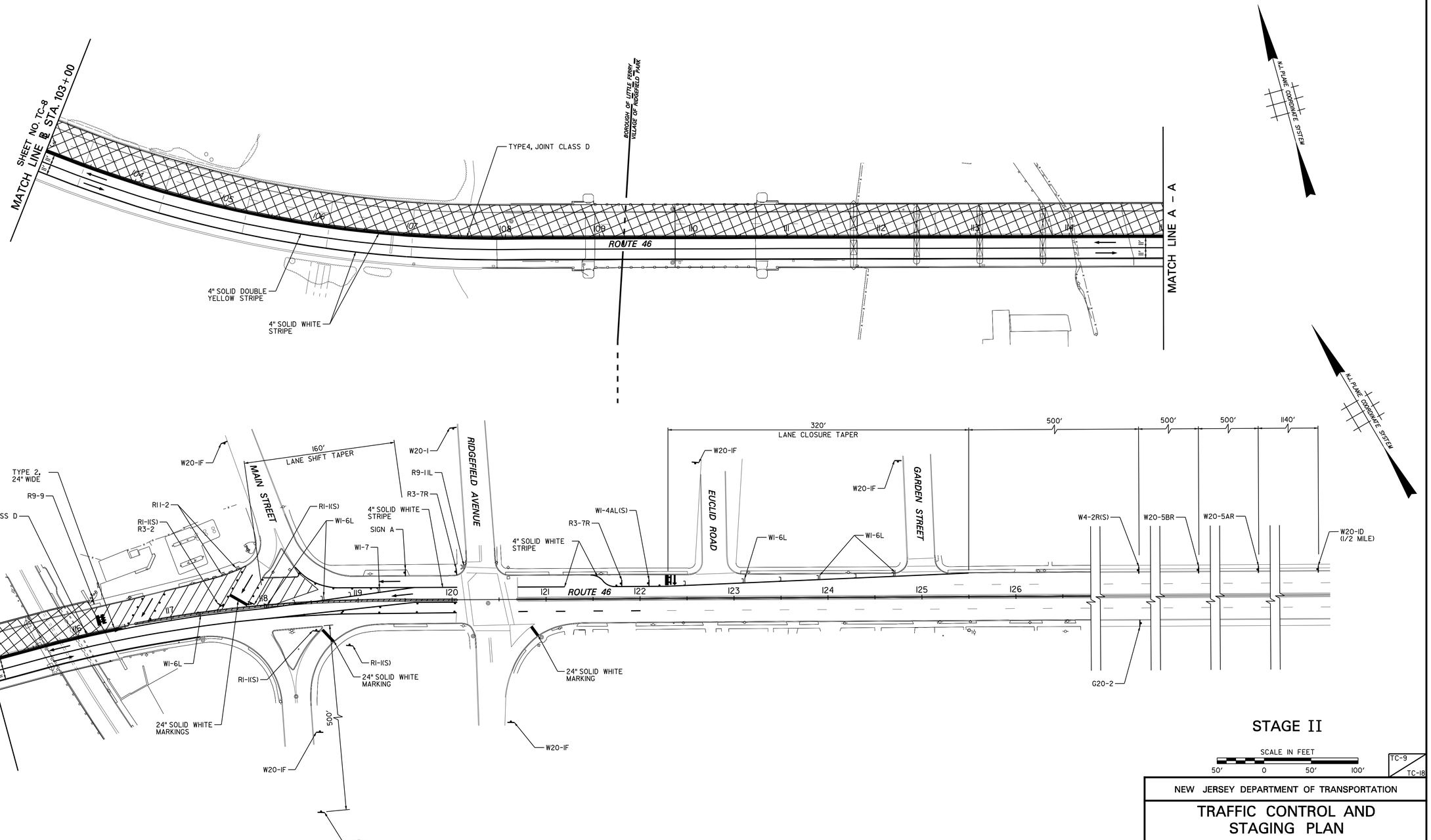

STAGE II

SCALE IN FEET
50' 0 50' 100'

TC-9
TC-18

NOTES:

1. POSITIVE CLOSURE WITH CONSTRUCTION BARRIER DURING NON-WORK HOURS.
2. ERECT AND MAINTAINED CHAIN-LINK FENCE TO PREVENT PEDESTRIAN ACCESS TO THE WORK ZONE.

NEW JERSEY DEPARTMENT OF TRANSPORTATION

TRAFFIC CONTROL AND STAGING PLAN

ROUTE U.S. 46 LITTLE FERRY CIRCLE

CONTRACT NO. 069950373

PARSONS BRINCKERHOFF, INC.
CERTIFICATION OF AUTHORIZATION NO. 24GA28029800

STEWART R. GORDON
N.J. PROFESSIONAL ENGINEER NO. 24GE03660800

PARSONS BRINCKERHOFF CADD DATA

OPERATOR	Carnevale	QUEUE	\\ampr1pr-t01\PRIPL03_BW.IP
PLOT DATE	07-MAR-2013 15:16		
PENTABLE	ehx.tbl		
DESIGN FILE	T:\20063\Tr-f\tc09.dgn		

STATE	FEDERAL PROJECT NO.
N.J.	

BOROUGH OF LITTLE FERRY

COUNTY OF BERGEN

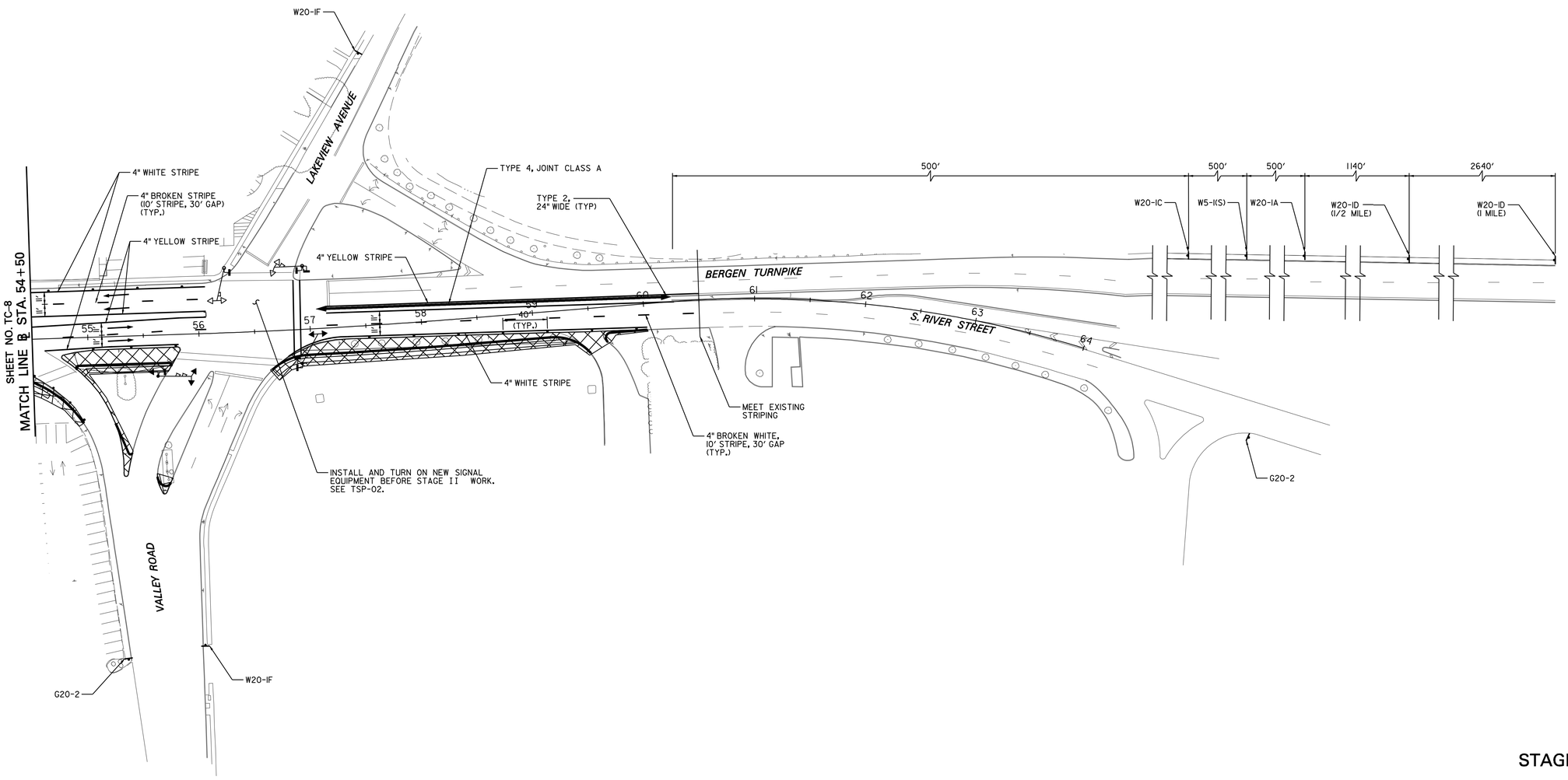

STAGE II

SCALE IN FEET

50' 0 50' 100'

TC-10 / TC-18

NEW JERSEY DEPARTMENT OF TRANSPORTATION

TRAFFIC CONTROL AND STAGING PLAN

ROUTE U.S. 46 LITTLE FERRY CIRCLE

CONTRACT NO. 069950373

PARSONS BRINCKERHOFF, INC.
CERTIFICATION OF AUTHORIZATION NO. 24GA28029800

STEWART R. GORDON
N.J. PROFESSIONAL ENGINEER NO. 24GE03660800

51

PARSONS BRINCKERHOFF CADD DATA

OPERATOR	Carnevale	QUEUE	\\ampr1pr-t01\PRIPL03.BW\LP
PLOT DATE	07-MAR-2013 15:16		
PENTABLE	ehx.tbl		
DESIGN FILE	T:\20063\Trf\tc10.dgn		

BOROUGH OF LITTLE FERRY

COUNTY OF BERGEN

STATE	FEDERAL PROJECT NO.
N.J.	

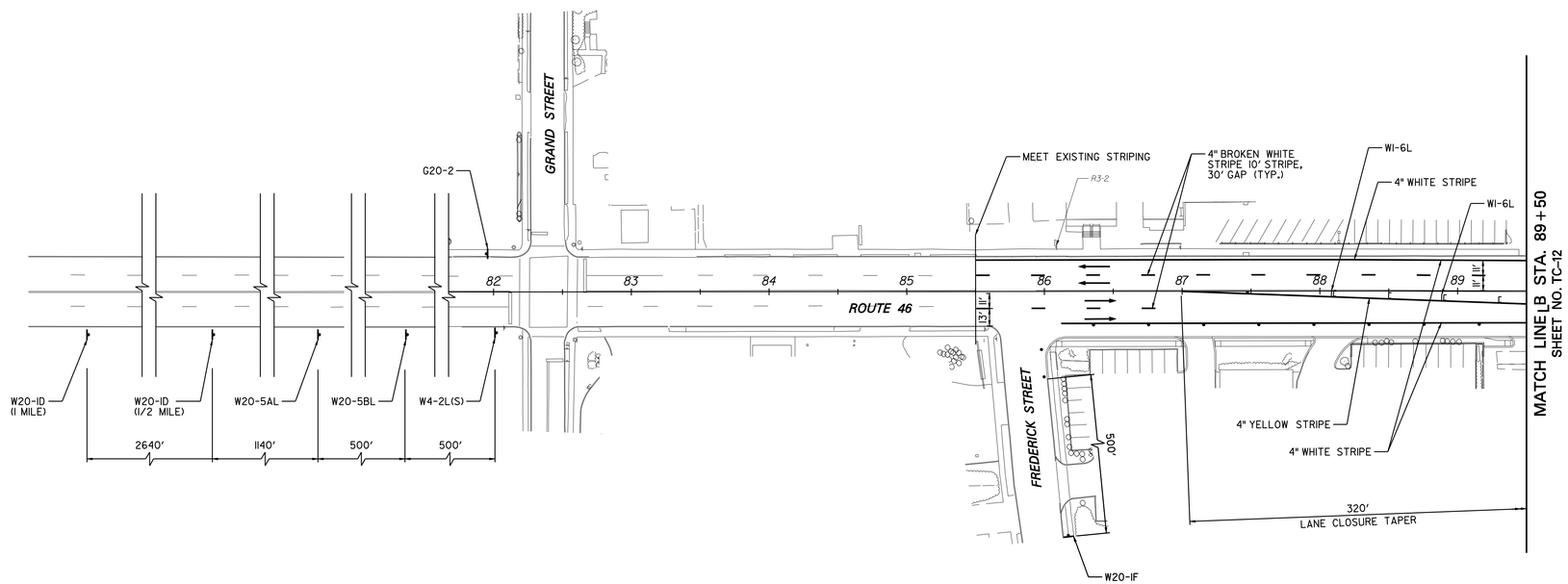

STAGE III

SCALE IN FEET

50' 0 50' 100'

TC-11 / TC-18

NEW JERSEY DEPARTMENT OF TRANSPORTATION

TRAFFIC CONTROL AND STAGING PLAN

ROUTE U.S. 46 LITTLE FERRY CIRCLE

CONTRACT NO. 069950373

PARSONS BRINCKERHOFF, INC.
CERTIFICATION OF AUTHORIZATION NO. 24GA28029800

STEWART R. GORDON
N.J. PROFESSIONAL ENGINEER NO. 24GE03660800

PARSONS BRINCKERHOFF CADD DATA

OPERATOR	Carnevale	QUEUE	\\ampr1pr-t01\PRIPL03_BW.IP
PLOT DATE	07-MAR-2013 15:16		
PENTABLE	etx.tbl		
DESIGN FILE	T:\20063\Trf\tcll.dgn		

STATE	FEDERAL PROJECT NO.
N.J.	

BOROUGH OF LITTLE FERRY

COUNTY OF BERGEN

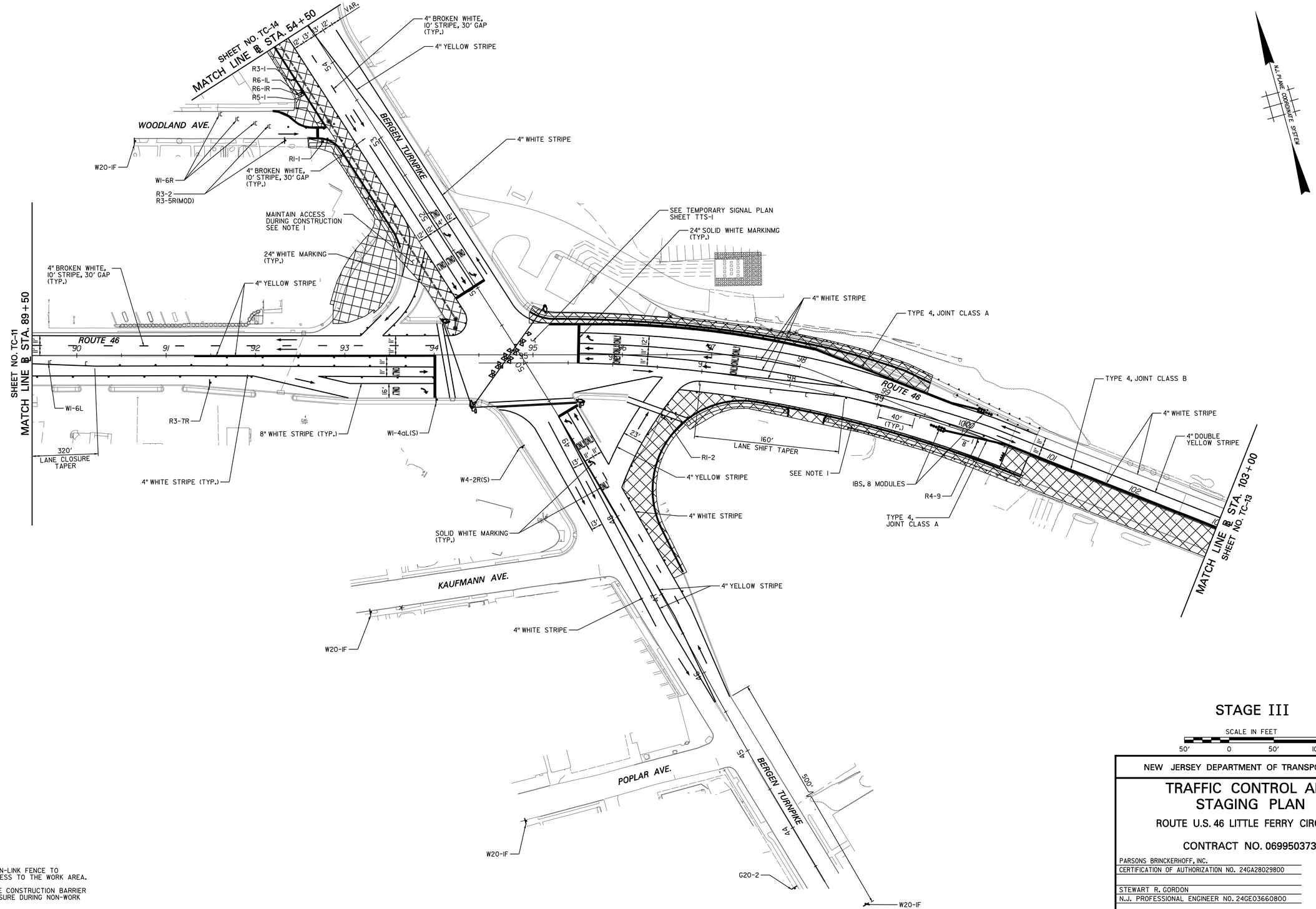

NOTES:

1. ERECT AND MAINTAIN CHAIN-LINK FENCE TO PREVENT PEDESTRIAN ACCESS TO THE WORK AREA.
2. PLACE PRECAST CONCRETE CONSTRUCTION BARRIER TO PROVIDE POSITIVE CLOSURE DURING NON-WORK HOURS.

STAGE III

SCALE IN FEET

50' 0 50' 100'

TC-12 / TC-18

NEW JERSEY DEPARTMENT OF TRANSPORTATION

TRAFFIC CONTROL AND STAGING PLAN

ROUTE U.S. 46 LITTLE FERRY CIRCLE

CONTRACT NO. 069950373

PARSONS BRINCKERHOFF, INC.
CERTIFICATION OF AUTHORIZATION NO. 24GA28029800

STEWART R. GORDON
N.J. PROFESSIONAL ENGINEER NO. 24GE03660800

PARSONS BRINCKERHOFF CADD DATA

OPERATOR	Carnevale	QUEUE	\\ampr1pr-t01\PRIPL03_BW.IP
PLOT DATE	07-MAR-2013 15:16		
PENTABLE	ehx.tbl		
DESIGN FILE	T:\20063\Tr-f\tcl2.dgn		

STATE	FEDERAL PROJECT NO.
N.J.	

BOROUGH OF LITTLE FERRY
VILLAGE OF RIDGEFIELD PARK

COUNTY OF BERGEN

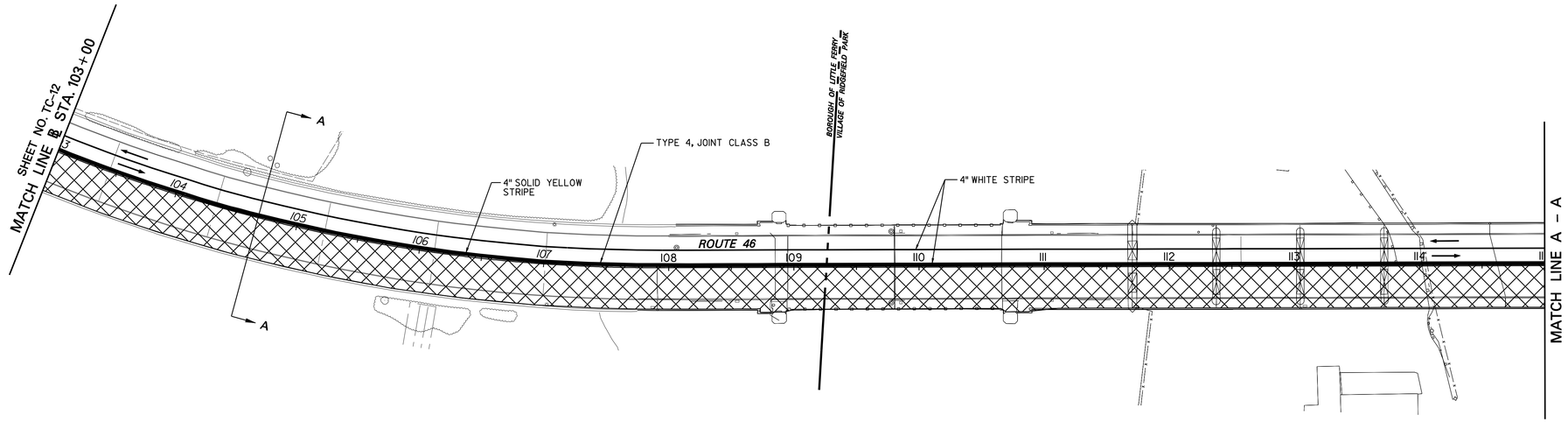

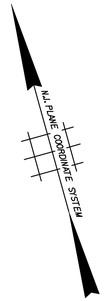

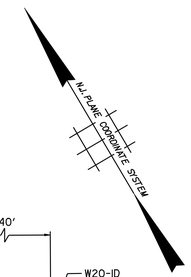

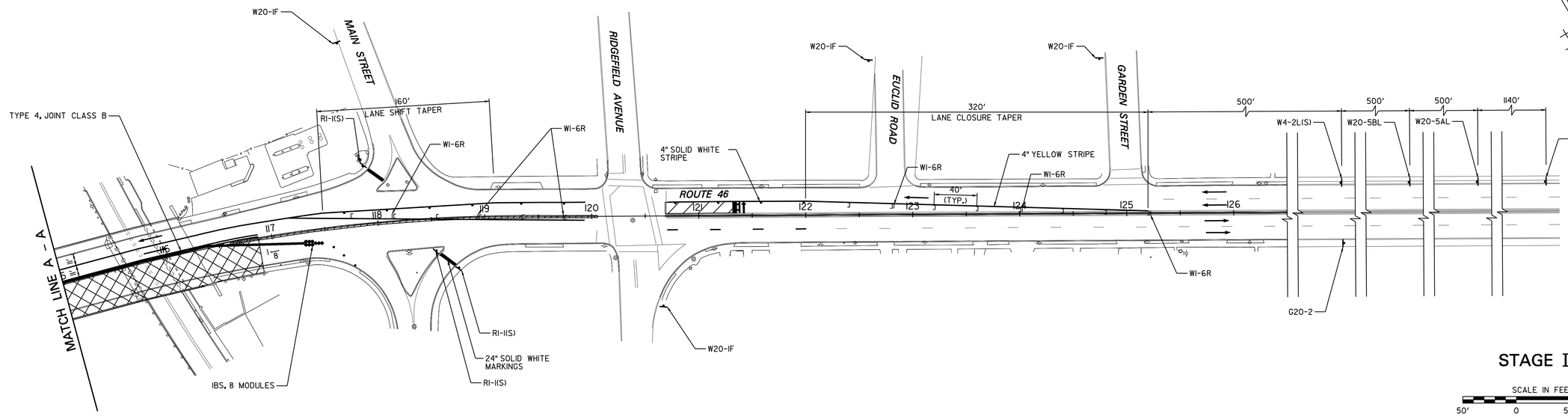

STAGE III

SCALE IN FEET
50' 0 50' 100'

TC-13
TC-18

NEW JERSEY DEPARTMENT OF TRANSPORTATION

TRAFFIC CONTROL AND STAGING PLAN

ROUTE U.S. 46 LITTLE FERRY CIRCLE

CONTRACT NO. 069950373

PARSONS BRINCKERHOFF, INC.
CERTIFICATION OF AUTHORIZATION NO. 24GA28029800

STEWART R. GORDON
N.J. PROFESSIONAL ENGINEER NO. 24GE03660800

NOTE:

1. ERECT AND MAINTAIN CHAIN-LINK FENCE TO PREVENT PEDESTRIAN ACCESS TO THE WORK AREA.

PARSONS BRINCKERHOFF CADD DATA

OPERATOR	Carnevale	QUEUE	\\ampr\pr101\PRIPL03.BW.IP
PLOT DATE	07-MAR-2013 15:16		
PENTABLE	ehx.tbl		
DESIGN FILE	T:\20063\Tr-f\tc13.dgn		

STATE	FEDERAL PROJECT NO.
N.J.	

BOROUGH OF LITTLE FERRY

COUNTY OF BERGEN

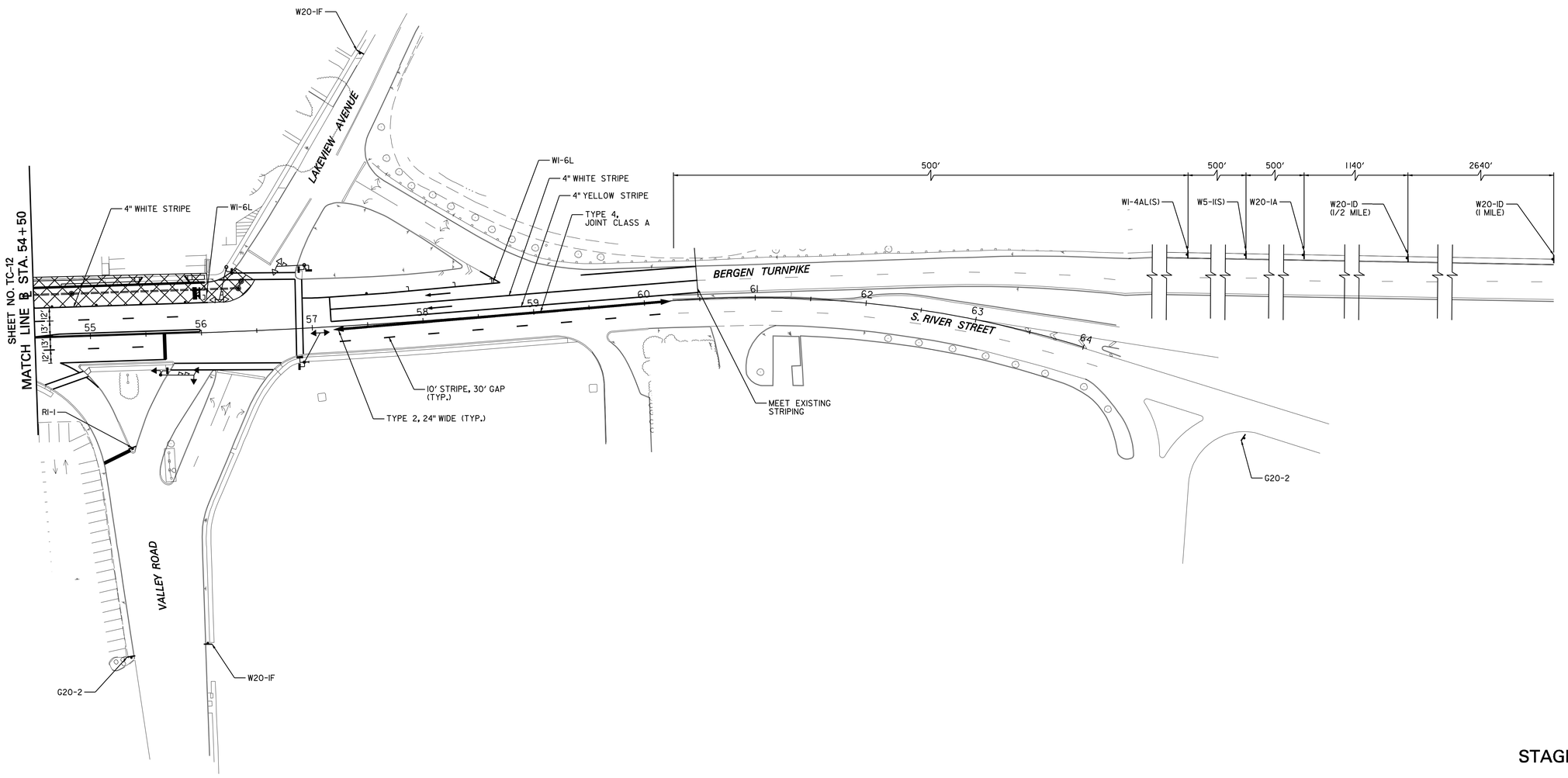

STAGE III

SCALE IN FEET

50' 0 50' 100'

TC-14 / TC-18

NEW JERSEY DEPARTMENT OF TRANSPORTATION

TRAFFIC CONTROL AND STAGING PLAN

ROUTE U.S. 46 LITTLE FERRY CIRCLE

CONTRACT NO. 069950373

PARSONS BRINCKERHOFF, INC.
CERTIFICATION OF AUTHORIZATION NO. 24GA28029800

STEWART R. GORDON
N.J. PROFESSIONAL ENGINEER NO. 24GE03660800

PARSONS BRINCKERHOFF CADD DATA

OPERATOR	Carnevale	QUEUE	\\ampr1pr-t01\PRIPL03_BW.LP
PLOT DATE	07-MAR-2013 15:16		
PENTABLE	ehx.tbl		
DESIGN FILE	T:\20063\Trf\tc14.dgn		

BOROUGH OF LITTLE FERRY

COUNTY OF BERGEN

STATE	FEDERAL PROJECT NO.
N.J.	

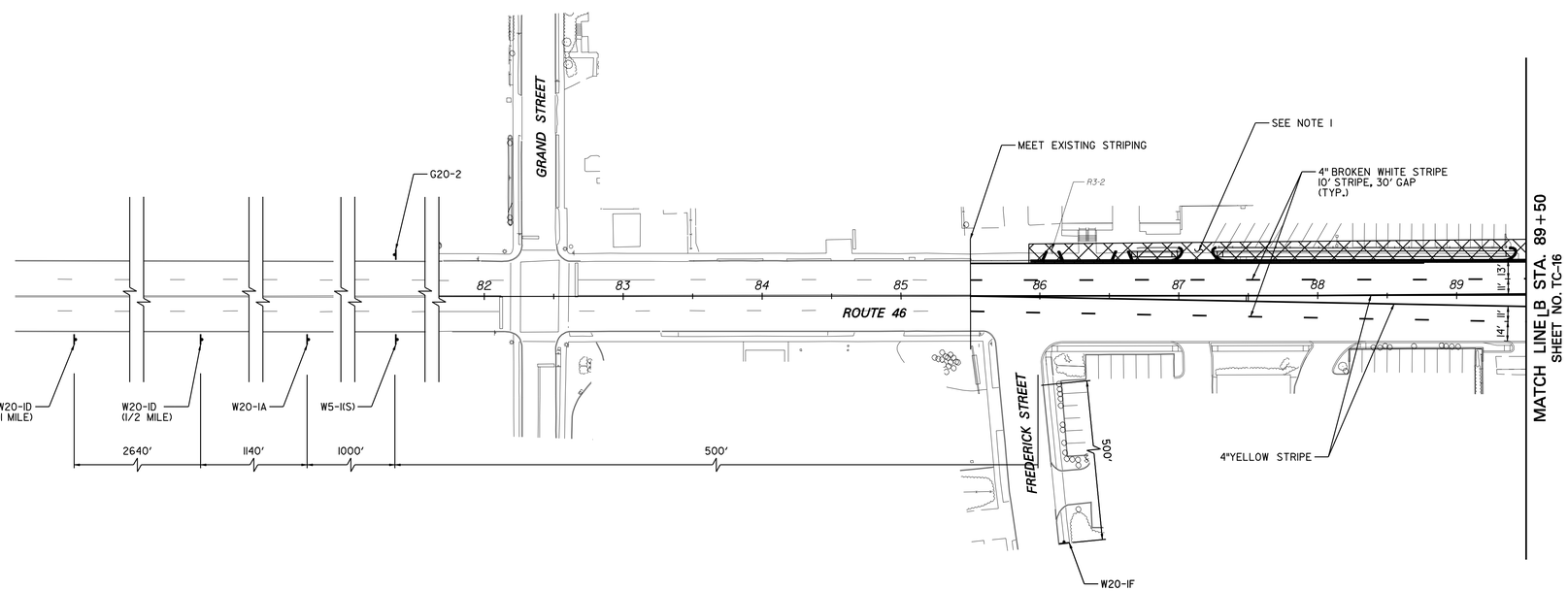

STAGE IV
(SEE NOTE 2)

SCALE IN FEET
50' 0 50' 100'

TC-15
TC-18

NOTES:

1. WORK IN THIS AREA TO BE PERFORMED IN ACCORDANCE WITH THE ALLOWABLE LANE CLOSURE SCHEDULE IN TCD-1.

2. BRIDGE CONSTRUCTION FROM STAGE III MAY BE COMPLETED IN STAGE IV. IF NEC ESSARY, STAGE III TRAFFIC PATTERN MAY BE MAINTAINED ON ROUTE 46 UNTIL BRIDGE CONSTRUCTION IS COMPLETED, AT WHICH TIME STAGE IV TRAFFIC PATTERN WILL BE IMPLEMENTED FOR COMPLETION OF PROJECT.

NEW JERSEY DEPARTMENT OF TRANSPORTATION

TRAFFIC CONTROL AND STAGING PLAN

ROUTE U.S. 46 LITTLE FERRY CIRCLE

CONTRACT NO. 069950373

PARSONS BRINCKERHOFF, INC.
CERTIFICATION OF AUTHORIZATION NO. 24GA28029800

STEWART R. GORDON
N.J. PROFESSIONAL ENGINEER NO. 24GE03660800

PARSONS BRINCKERHOFF CADD DATA

OPERATOR	Carnevale	QUEUE	\\ampr1pr+01\PRIPL03.BW.IP
PLOT DATE	07-MAR-2013 15:16		
PENTABLE	ehx.tbl		
DESIGN FILE	T:\20063\Trf\tc15.dgn		

STATE	FEDERAL PROJECT NO.
N.J.	

BOROUGH OF LITTLE FERRY

COUNTY OF BERGEN

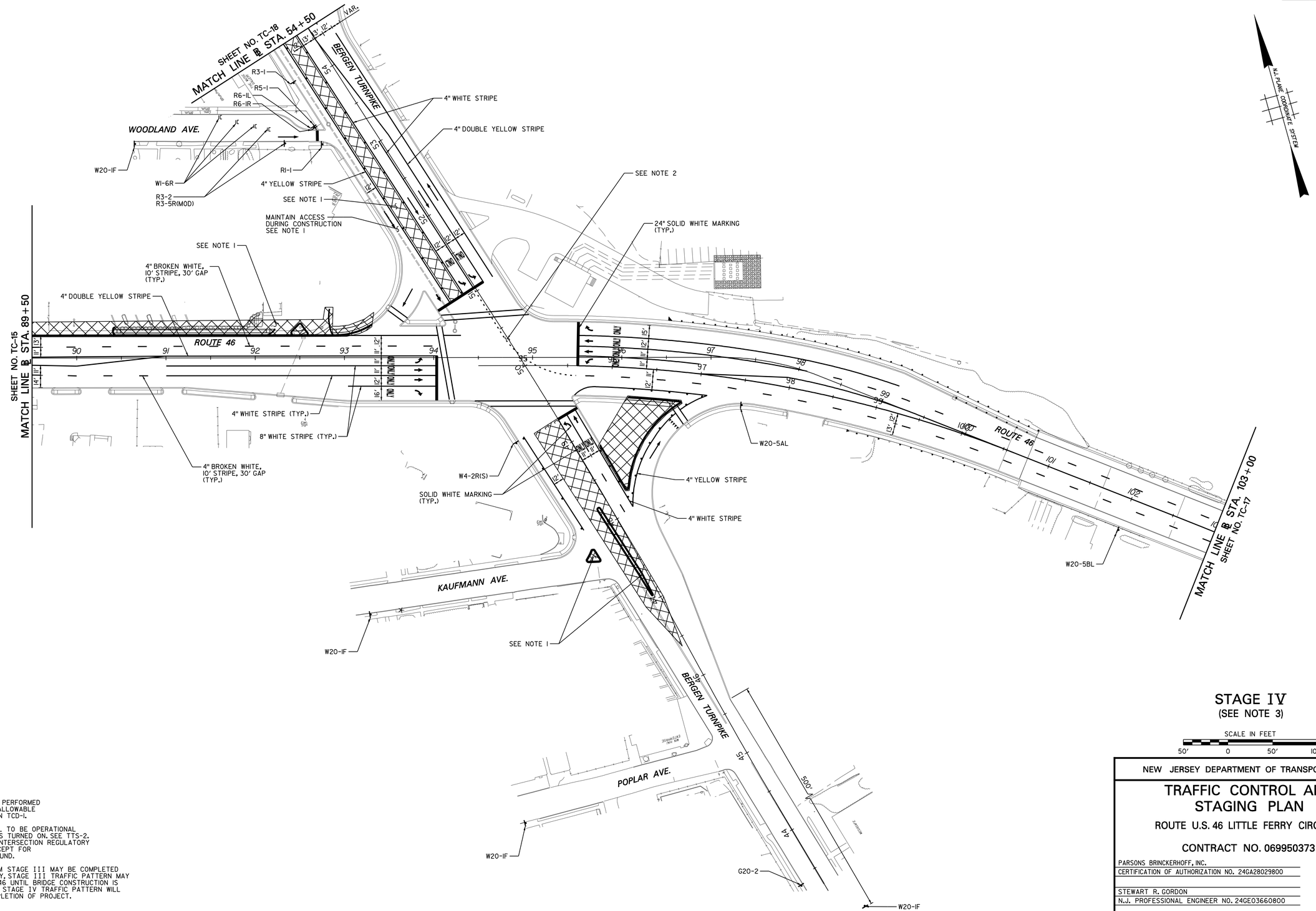

NOTES:

1. WORK IN THIS AREA TO BE PERFORMED IN ACCORDANCE WITH THE ALLOWABLE LANE CLOSURE SCHEDULE IN TCD-1.
2. TEMPORARY TRAFFIC SIGNAL TO BE OPERATIONAL UNTIL PERMANENT SIGNAL IS TURNED ON. SEE TTS-2. AT THAT TIME, PROPOSED INTERSECTION REGULATORY SIGNS TO BE IN PLACE, EXCEPT FOR BERGEN TURNPIKE SOUTHBOUND.
3. BRIDGE CONSTRUCTION FROM STAGE III MAY BE COMPLETED IN STAGE IV. IF NECESSARY, STAGE III TRAFFIC PATTERN MAY BE MAINTAINED ON ROUTE 46 UNTIL BRIDGE CONSTRUCTION IS COMPLETED, AT WHICH TIME STAGE IV TRAFFIC PATTERN WILL BE IMPLEMENTED FOR COMPLETION OF PROJECT.

STAGE IV
(SEE NOTE 3)

SCALE IN FEET
50' 0 50' 100'

TC-16
TC-18

NEW JERSEY DEPARTMENT OF TRANSPORTATION

TRAFFIC CONTROL AND STAGING PLAN

ROUTE U.S. 46 LITTLE FERRY CIRCLE

CONTRACT NO. 069950373

PARSONS BRINCKERHOFF, INC.
CERTIFICATION OF AUTHORIZATION NO. 24GA28029800

STEWART R. GORDON
N.J. PROFESSIONAL ENGINEER NO. 24GE03660800

PARSONS BRINCKERHOFF CADD DATA

OPERATOR	Carnevale	QUEUE	\\ampr1pr-t01\PRIPL03_BW.JP
PLOT DATE	07-MAR-2013 15:16		
PENTABLE	ehx.tbl		
DESIGN FILE	T:\20063\Tr-f\-tc16.dgn		

STATE	FEDERAL PROJECT NO.
N.J.	

BOROUGH OF LITTLE FERRY
VILLAGE OF RIDGEFIELD PARK

COUNTY OF BERGEN

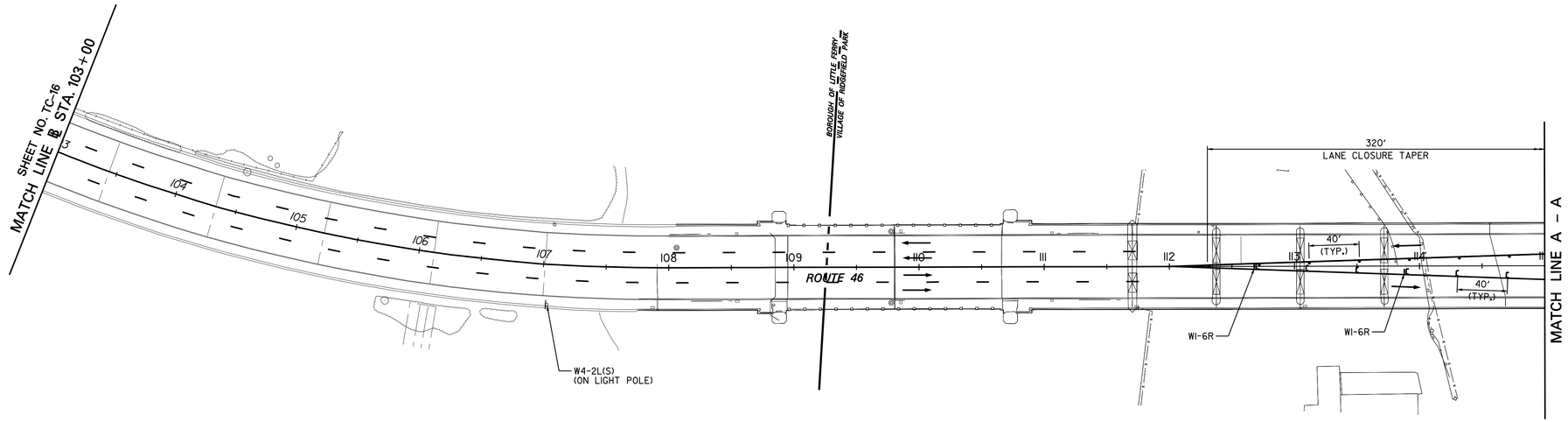

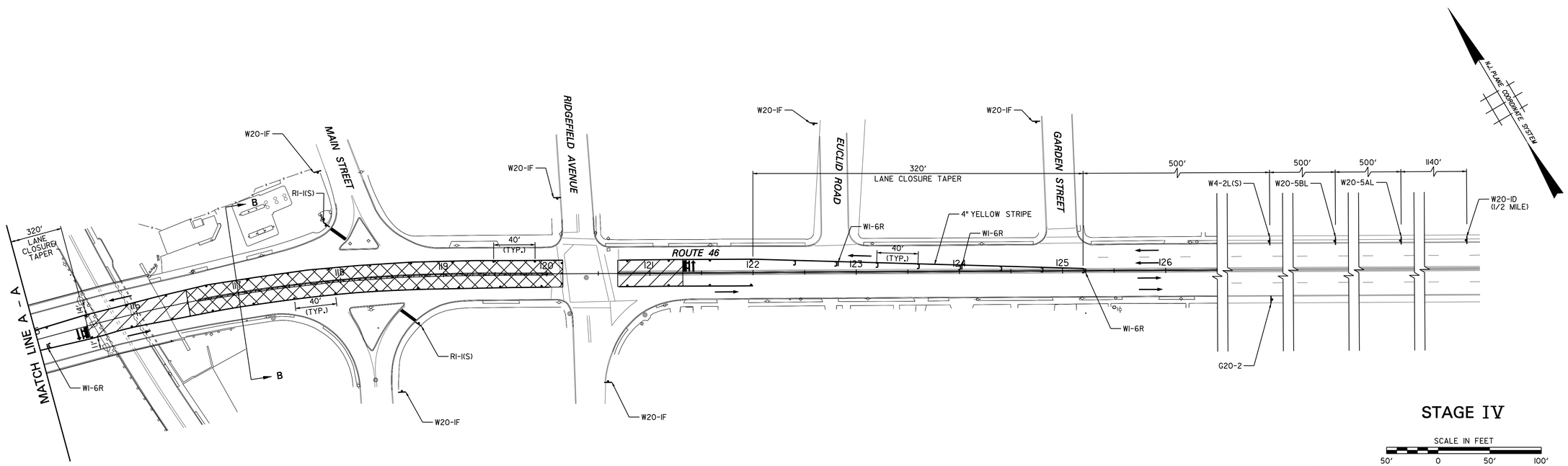

STAGE IV

SCALE IN FEET
50' 0 50' 100'

TC-17
TC-18

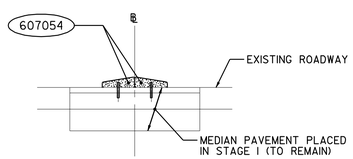

SECTION B–B
RESTORATION
N.T.S.

NEW JERSEY DEPARTMENT OF TRANSPORTATION

TRAFFIC CONTROL AND STAGING PLAN

ROUTE U.S. 46 LITTLE FERRY CIRCLE

CONTRACT NO. 069950373

PARSONS BRINCKERHOFF, INC.
CERTIFICATION OF AUTHORIZATION NO. 24GA28029800

STEWART R. GORDON
N.J. PROFESSIONAL ENGINEER NO. 24GE03660800

PARSONS BRINCKERHOFF CADD DATA

OPERATOR	Carnevale	QUEUE	\\ampr\pr+01\PRIPL03_BW.IP
PLOT DATE	07-MAR-2013 15:16		
PENTABLE	ehx.tbl		
DESIGN FILE	T:\20063\Tr+f\tc17.dgn		

STATE	FEDERAL PROJECT NO.
N.J.	

BOROUGH OF LITTLE FERRY

COUNTY OF BERGEN

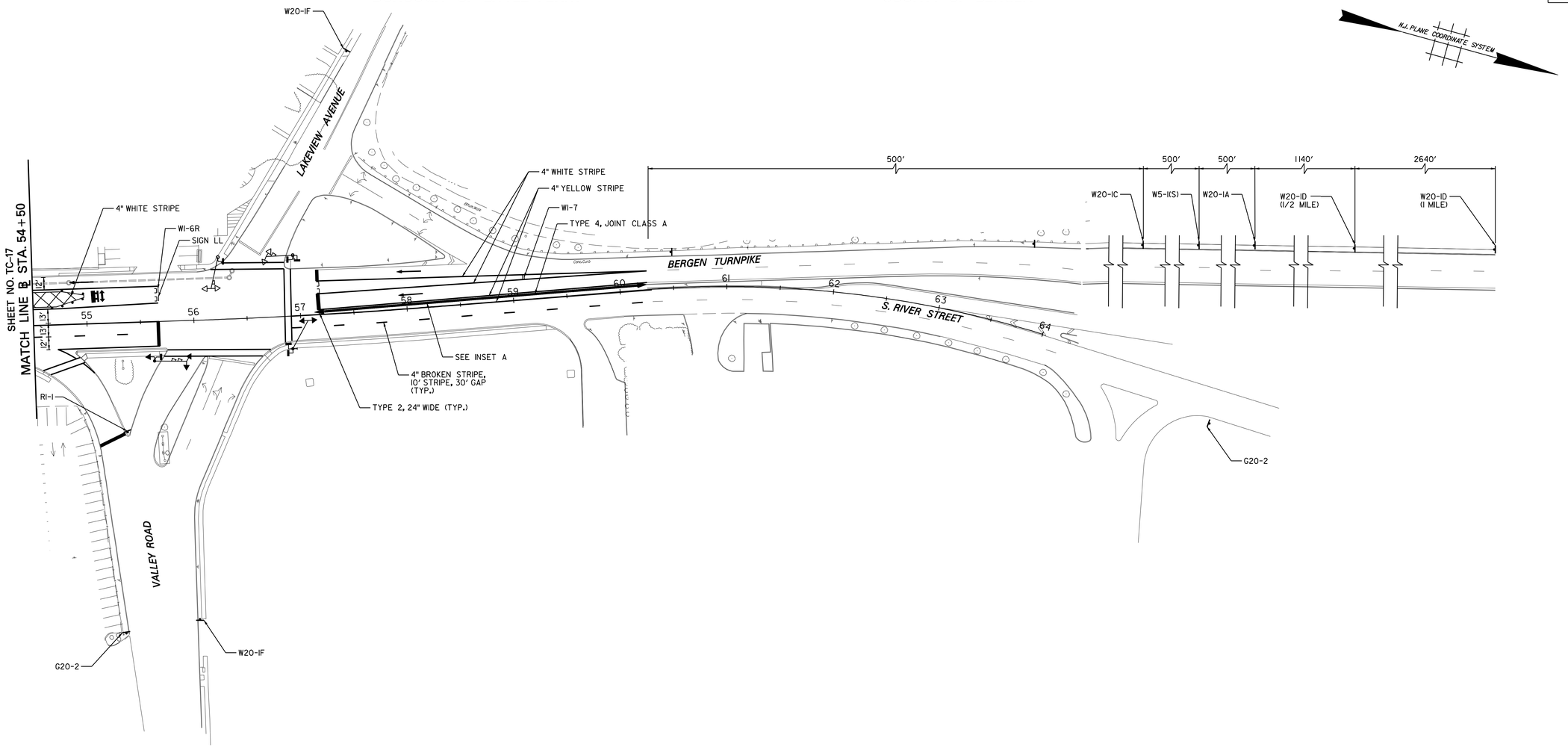

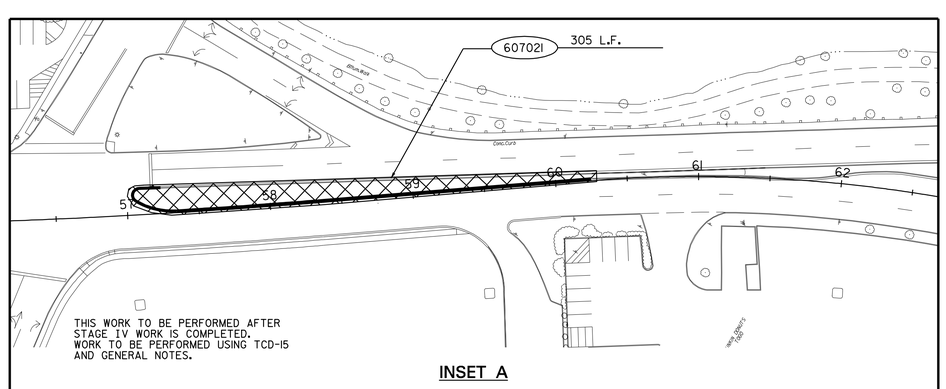

INSET A

ITEM NO.	TO BE CONSTRUCTED	CONTRACT QUANTITY
607021P	9" X 18" CONCRETE VERTICAL CURB	305 L.F.

STAGE IV

SCALE IN FEET

50' 0 50' 100'

TC-18 / TC-18

NEW JERSEY DEPARTMENT OF TRANSPORTATION

TRAFFIC CONTROL AND STAGING PLAN

ROUTE U.S. 46 LITTLE FERRY CIRCLE

CONTRACT NO. 069950373

PARSONS BRINCKERHOFF, INC.
CERTIFICATION OF AUTHORIZATION NO. 24GA28029800

STEWART R. GORDON
N.J. PROFESSIONAL ENGINEER NO. 24GE03660800

PARSONS BRINCKERHOFF CADD DATA

OPERATOR	Carnevale	QUEUE	\\ampr1pr-t01\PRIP1.03_BW.IP
PLOT DATE	07-MAR-2013 15:16		
PENTABLE	ehx.tbl		
DESIGN FILE	T:\20063\Tr-f\tc18.dgn		

STATE	FEDERAL PROJECT NO.
N.J.	

ROUTE U.S. 46 & BERGEN TURNPIKE
BERGEN COUNTY

ITEM NO.	TO BE CONSTRUCTED	CONTRACT QUANTITY
702054M	TEMPORARY TRAFFIC SIGNAL LOCATION No. 1	LUMP SUM
703033P	TEMPORARY HIGHWAY LIGHTING SYSTEM	LUMP SUM

90/120 Second Background Cycle

NORMAL OPERATION (WITHOUT PEDESTRIAN ACTUATION)

PHASE	1,2,5,6	3,4,7,8	9,10	SIGNAL INDICATIONS 11	12,13	14	PEDESTRIAN FACES 15,16	19,20	17,18	STAGE II/III TIMING I (SECONDS)	STAGE II/III TIMING II (SECONDS)
A. Route U.S. 46 R.O.W.	<R	G	R	R	R	R	W		DW	31-23	61-47
Pedestrian Clearance	<R	G	R	R	R	R	FDW		DW	24	24
Change	<R	Y	R	R	R	R	DW		DW	5*	5*
Clearance	<R	R	R	R	R	R	DW		DW	2	2
B. Bergen Turnpike NB R.O.W.	<R	R	<G/G	G	R	R	DW		DW	7	7-8
Change	<R	R	Y	Y	R	R	DW		DW	4	4
Clearance	<R	R	R	R	R	R	DW		DW	3	3
C. Bergen Turnpike SB R.O.W.	<R	R	R	R	<G/G	G	DW		DW	7-15	7-20
Change	<R	R	R	R	Y	Y	DW		DW	4	4
Clearance	<R	R	R	R	R	R	DW		DW	3	3

WITH PEDESTRIAN ACTUATION

PHASE	1,2,5,6	3,4,7,8	9,10	SIGNAL INDICATIONS 11	12,13	14	PEDESTRIAN FACES 15,16	19,20	17,18	STAGE II/III TIMING I (SECONDS)	STAGE II/III TIMING II (SECONDS)
A. Bergen Turnpike NB R.O.W.	<R	G	R	R	R	R	W		DW	8	38-37
Change	<R	G	R	R	R	R	FDW		DW	24	24
Clearance	<R	Y	R	R	R	R	DW		DW	5*	5*
B. Bergen Turnpike SB R.O.W.	<R	R	R	R	R	R	DW		DW	2	2
Pedestrian Clearance	<R	R	<G/G	G	R	R	DW		DW	7	7-8
Change	<R	R	Y	Y	R	R	DW		DW	4	4
Clearance	<R	R	R	R	R	R	DW		DW	3	3
C. Emergency Flash	<R	R	R	R	<G/G	G	DW		W	7	7
	<R	R	R	R	<G/G	G	DW		FDW	23	23
	<R	R	R	R	Y	Y	DW		DW	4	4
	<R	R	R	R	R	R	DW		DW	3	3
	<R	Y	R	R	R	R	-		-	-	-

The manual controls to be disconnected
The vehicle extensions are to be set at 2 seconds.
The memory circuits are to be OFF.
The 120 second cycle (Timing II) is to be in operation the following hours:
7:00 AM * 7:00PM (Monday-Friday)
The 90 second cycle (Timing I) is to be in operation at all other times.

* An offset of 36 and 56 seconds for Timing I and Timing II respectively will be measured from the beginning of yellow to Route U.S. 46 traffic at Liberty Street to the beginning of yellow to Route U.S. 46 traffic at this intersection.

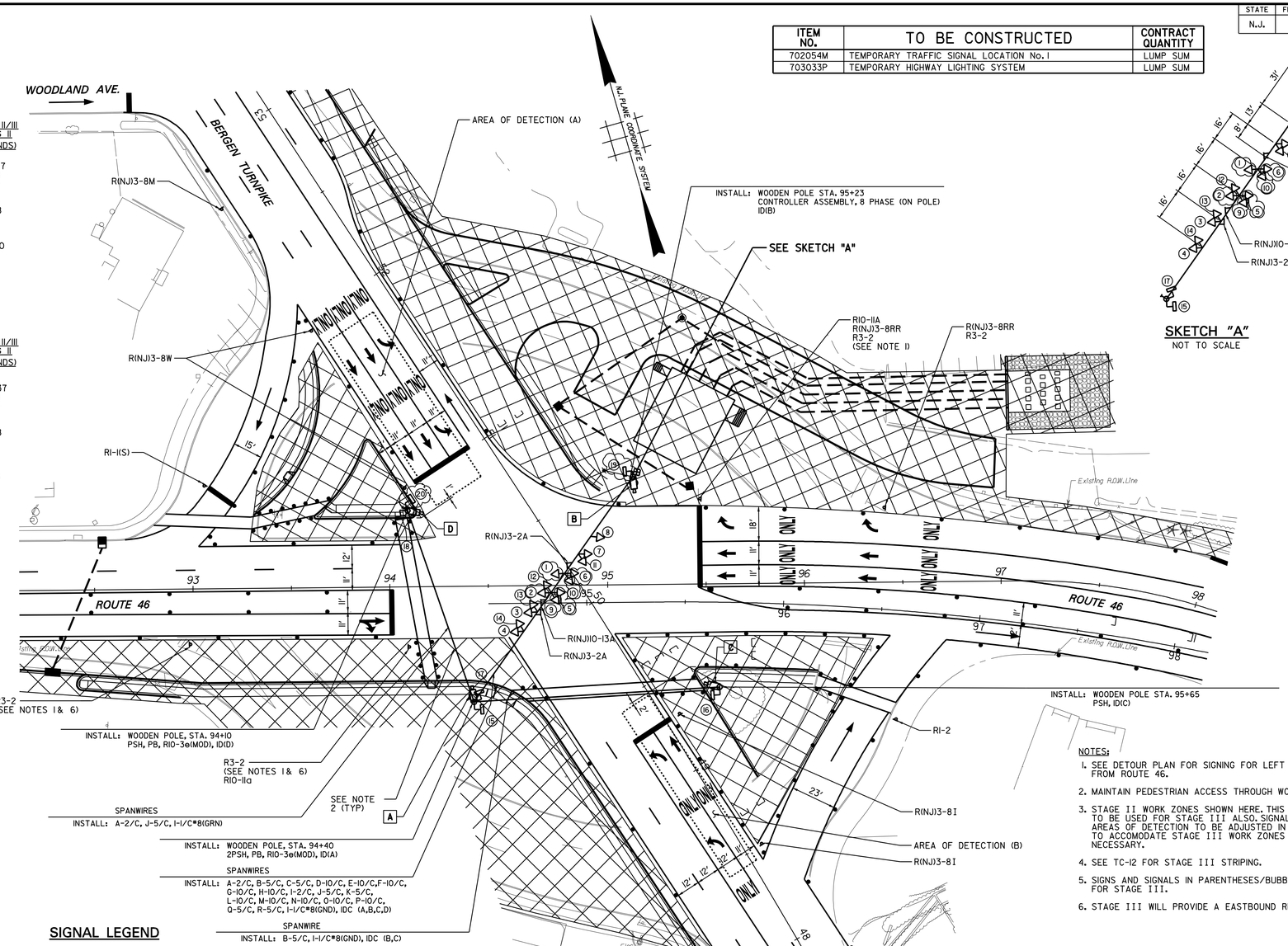

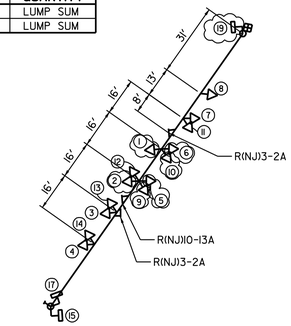

SKETCH "A"
NOT TO SCALE

NOTES:

1. SEE DETOUR PLAN FOR SIGNING FOR LEFT TURNS FROM ROUTE 46.
2. MAINTAIN PEDESTRIAN ACCESS THROUGH WORKZONE.
3. STAGE II WORK ZONES SHOWN HERE. THIS SIGNAL TO BE USED FOR STAGE III ALSO. SIGNAL HEADS AND AREAS OF DETECTION TO BE ADJUSTED IN THE FIELD TO ACCOMODATE STAGE III WORK ZONES WHERE NECESSARY.
4. SEE TC-12 FOR STAGE III STRIPING.
5. SIGNS AND SIGNALS IN PARENTHESES/BUBBLES ARE FOR STAGE III.
6. STAGE III WILL PROVIDE A EASTBOUND RIGHT TURN LANE.

BLOCK WIRING DIAGRAM

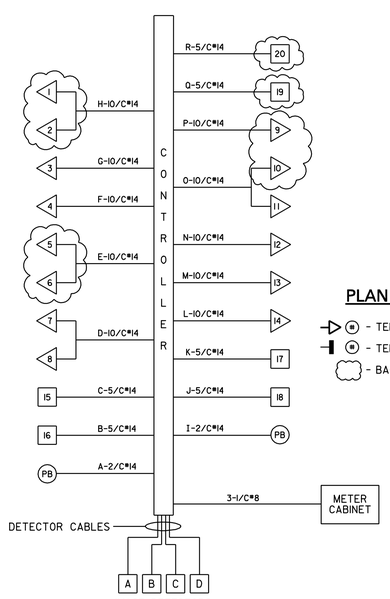

PLAN LEGEND

- TEMPORARY SIGNAL HEAD
- TEMPORARY PEDESTRIAN HEAD
- BAGGED & DISCONNECTED HEAD

SIGNAL LEGEND

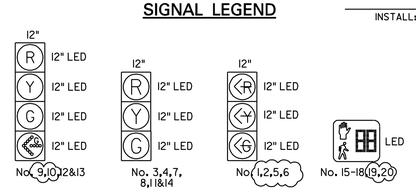

SIGN LEGEND

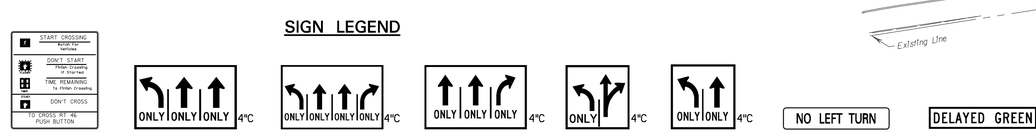

STAGE II
STAGE III

SCALE IN FEET
30' 20' 10' 0 30' 60'

TTS-1
TTS-4

NEW JERSEY DEPARTMENT OF TRANSPORTATION

TEMPORARY TRAFFIC SIGNAL PLANS

ROUTE U.S. 46 LITTLE FERRY CIRCLE

CONTRACT NO. 069950373

PARSONS BRINCKERHOFF, INC.
CERTIFICATION OF AUTHORIZATION NO. 24GA28029800

STEWART R. GORDON
N.J. PROFESSIONAL ENGINEER NO. 24GE03660800

60

PARSONS BRINCKERHOFF CADD DATA

OPERATOR	Carnevale	QUEUE	\\amprlpr+01\PRIPL03.BW.LP
PLOT DATE	07-MAR-2013 15:19		
PENTABLE	tc.tbl		
DESIGN FILE	T:\20063\Tr+f\tts01.dgn		

STATE	FEDERAL PROJECT NO.
N.J.	

ROUTE U.S. 46 & BERGEN TURNPIKE
BERGEN COUNTY

90/120 Second Background Cycle

NORMAL OPERATION (WITHOUT PEDESTRIAN ACTUATION)

PHASE	1,2,5,6	3,4,7,8	9,10	SIGNAL INDICATIONS 11	12,13	14	PEDESTRIAN FACES 15,16,19,20	17,18	STAGE IV TIMING I (SECONDS)	STAGE IV TIMING II (SECONDS)
A. Route U.S. 46 ER/WB Left Turns	<G	R	R	R	R	R	DW	DW	7-12	7-22
Change	<Y	R	R	R	R	R	DW	DW	3	3
Clearance	<R	R	R	R	R	R	DW	DW	3	3
B. Route U.S. 46 R.O.W.	<R	G	R	R	R	R	W	DW	18-5	48-19
Pedestrian Clearance	<R	G	R	R	R	R	FDW	DW	24	24
Change	<R	Y	R	R	R	R	DW	DW	5•	5•
Clearance	<R	R	R	R	R	R	DW	DW	2	2
C. Bergen Turnpike NB R.O.W.	<R	R	<G/G	G	R	R	DW	DW	7	7-8
Change	<R	R	Y	Y	R	R	DW	DW	4	4
Clearance	<R	R	R	R	R	R	DW	DW	3	3
D. Bergen Turnpike SB R.O.W.	<R	R	R	R	G	G	DW	DW	7-15	7-20
Change	<R	R	R	R	Y	Y	DW	DW	4	4
Clearance	<R	R	R	R	R	R	DW	DW	3	3

WITH PEDESTRIAN ACTUATION ••

PHASE	1,2,5,6	3,4,7,8	9,10	SIGNAL INDICATIONS 11	12,13	14	PEDESTRIAN FACES 15,16,19,20	17,18	STAGE IV TIMING I (SECONDS)	STAGE IV TIMING II (SECONDS)
A. Route U.S. 46 EB/WB Left Turns	<G	R	R	R	R	R	DW	DW	7	7-22
Change	<Y	R	R	R	R	R	DW	DW	3	3
Clearance	<R	R	R	R	R	R	DW	DW	3	3
B. Route U.S. 46 R.O.W.	<R	G	R	R	R	R	W	DW	5	25-9
Pedestrian Clearance	<R	G	R	R	R	R	FDW	DW	24	24
Change	<R	Y	R	R	R	R	DW	DW	5•	5•
Clearance	<R	R	R	R	R	R	DW	DW	2	2
C. Bergen Turnpike NB R.O.W.	<R	R	<G/G	G	R	R	DW	DW	7	7-8
Change	<R	R	Y	Y	R	R	DW	DW	4	4
Clearance	<R	R	R	R	R	R	DW	DW	3	3
D. Bergen Turnpike SB R.O.W.	<R	R	R	R	<G/G	G	DW	W	7	7
Pedestrian Clearance	<R	R	R	R	<G/G	G	DW	FDW	23	23
Change	<R	R	R	R	Y	Y	DW	DW	4	4
Clearance	<R	R	R	R	R	R	DW	DW	3	3
Emergency Flash	<R	Y	R	R	R	R	-	-	-	-

The manual controls to be disconnected
The vehicle extensions are to be set at 2 seconds.
The memory circuits are to be OFF.
The left turn slots (Phase A) are to be separate phases but concurrently if actuation occurs in both slots. Each left turn slot has the capability of terminating or extending separately or independently of each other, thereby reverting the timing to the non-conflicting Phase B movement.
The 120 second cycle (Timing II) is to be in operation the following hours:
7:00 AM • 7:00PM (Monday-Friday)
The 90 second cycle (Timing I) is to be in operation at all other times.

• An offset of 35 and 42 seconds for Timing I and Timing II respectively will be measured from the beginning of yellow to Route U.S. 46 traffic at Liberty Street to the beginning of yellow to Route U.S. 46 traffic at this intersection.

•• With Pedestrian Push Button Actuation, the Timing I Cycle Length will be exceeded. As such, the times shown exceed the total background cycle length; the controller shall be programmed to guarantee a minimum of 7 second walk interval to Phase •D• when the Pedestrian override feature requires the cycle length to be exceeded.

BLOCK WIRING DIAGRAM

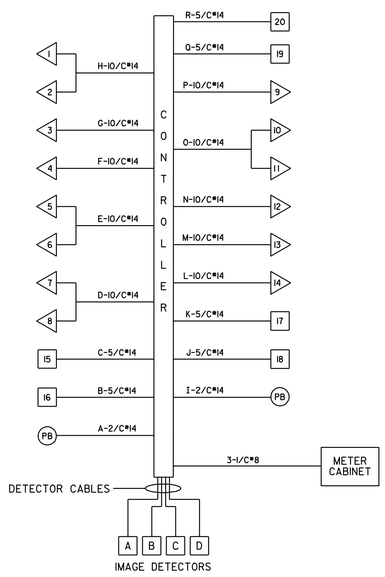

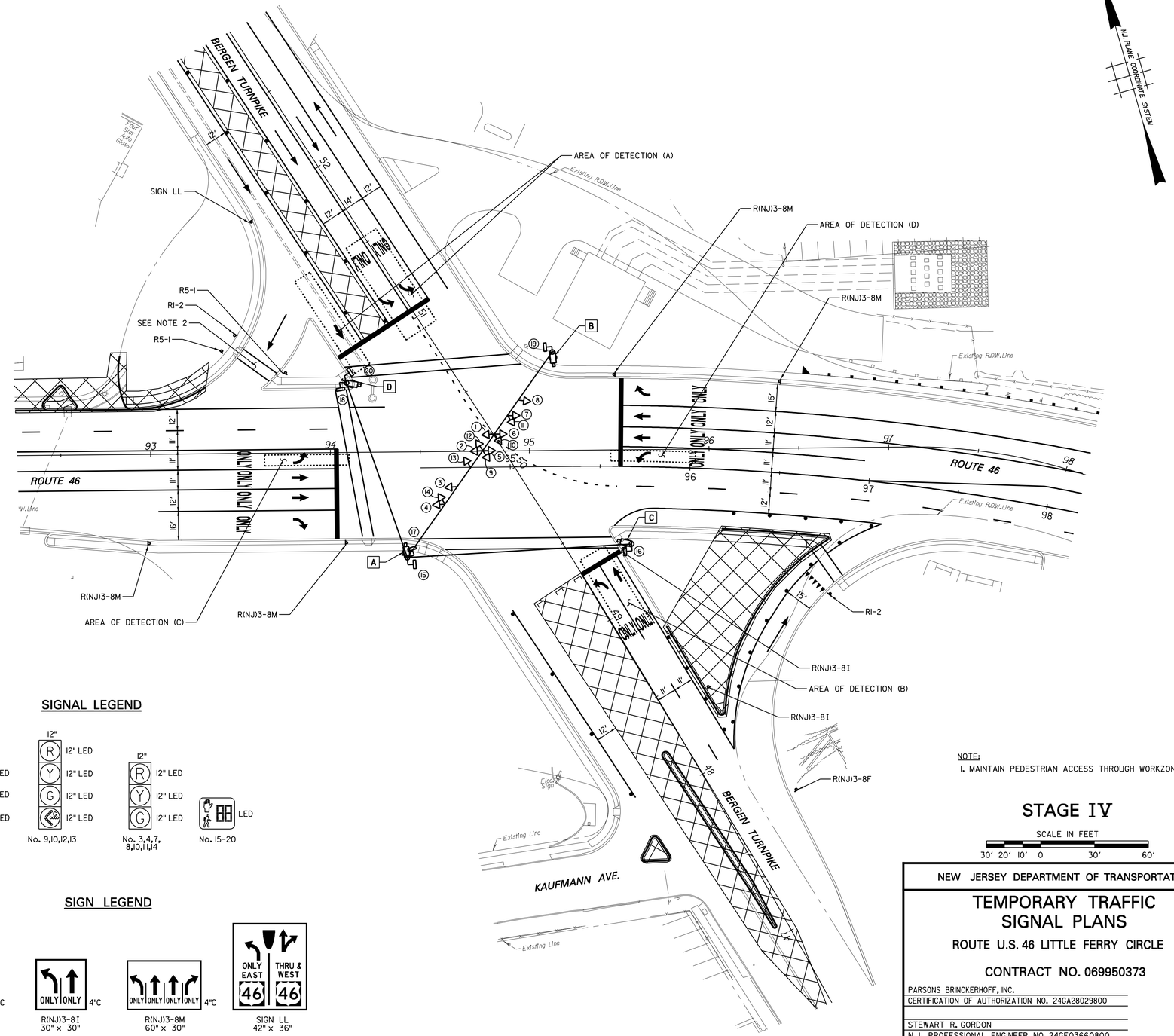

SIGNAL LEGEND

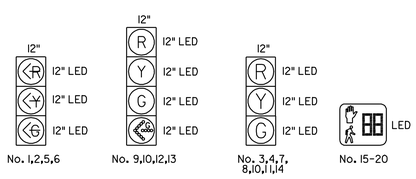

SIGN LEGEND

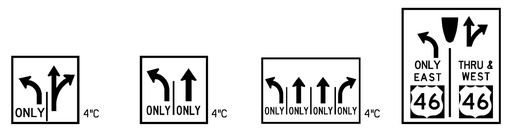

NOTE:
1. MAINTAIN PEDESTRIAN ACCESS THROUGH WORKZONE.

STAGE IV

SCALE IN FEET
30' 20' 10' 0 30' 60'

TTS-2 TTS-4

NEW JERSEY DEPARTMENT OF TRANSPORTATION

TEMPORARY TRAFFIC SIGNAL PLANS

ROUTE U.S. 46 LITTLE FERRY CIRCLE

CONTRACT NO. 069950373

PARSONS BRINCKERHOFF, INC.
CERTIFICATION OF AUTHORIZATION NO. 24GA28029800

STEWART R. GORDON
N.J. PROFESSIONAL ENGINEER NO. 24GE03660800

61

PARSONS BRINCKERHOFF CADD DATA

OPERATOR	Carnevale	QUEUE	\\amprlpr+01\PRIPL03_BW.IP
PLOT DATE	07-MAR-2013 15:19		
PENTABLE	tc.tbl		
DESIGN FILE	T:\20063\Trf\ttts02.dgn		

STATE	FEDERAL PROJECT NO.
N.J.	

NOTES:

1. FOR EXACT NUMBER AND LOCATION OF SIGNAL HEADS IN EACH CONSTRUCTION STAGE, SEE SHEETS TTS-1 THROUGH TTS-2.
2. SPAN WIRE SHALL BE 9/16" DIAMETER, HIGH-STRENGTH GRADE, GALVANIZED, 7-WIRE STRAND WITH 24.5 KIP BREAKING STRENGTH.
3. THE GUY WIRE SHALL BE 7/8" DIAMETER, HIGH-STRENGTH GRADE, GALVANIZED, 19-WIRE STRAND WITH 55.8 KIP BREAKING STRENGTH.
4. THE WIRE STRANDS SHALL BE CLASS A HOT-DIP GALVANIZED IN ACCORDANCE WITH ASTM A-475.
5. THE GUY WIRE PROTECTOR TO BE USED SHALL BE THE HALF-ROUND TYPE, FABRICATED FROM AT LEAST 14-GAGE STEEL AND SHALL BE HOT-DIP GALVANIZED. ITS LENGTH SHALL BE A MINIMUM OF 7.0'.
6. THE ANCHOR TO BE USED FOR GUYING THE POLE SHALL BE A TRIPLE HELICAL ANCHOR WITH A 1.5" ANCHOR ROD AS SHOWN OR AN EQUIVALENT ANCHOR APPROVED BY THE ENGINEER, SEE SHEET TTS-4 FOR DETAILS.
7. THE ANCHOR ROD TO BE USED FOR GUYING THE POLE SHALL BE OF DROP STEEL AND SHALL BE HOT-DIP GALVANIZED PER ASTM A153.
8. FOR ALUMINUM MATERIAL, STAINLESS STEEL FITTINGS SHALL BE USED.
9. THE ERECTION SEQUENCE SHALL BE AS FOLLOWS:
   - A. INSTALL POLES AND ALLOW FOUNDATION CONCRETE TO CURE.
   - B. INSTALL ANCHORS AND CONNECT GUY WIRE WITH STRAIN INSULATORS. LEAVE A MINIMUM OF 2.0' OF TAIL AFTER THE 3-BOLT CLAMP AT EACH ANCHOR ROD.
   - C. USING A COME-ALONG, SNUG EACH GUY WIRE TO ABOUT 2 KIP AND TIGHTEN 3-BOLT CLAMP. POLES TO REMAIN VERTICAL (WITHIN A 6" TOLERANCE AT THE TOP).
   - D. INSTALL SPAN WIRE WITH STRAIN INSULATORS. LEAVE A MINIMUM OF 2.0' OF TAIL AFTER THE 3-BOLT CLAMP AT EACH END OF SPAN WIRE.
   - E. ATTACH SIGNAL HEADS TO SPAN WIRE AND TIGHTEN SPAN WIRE AND GUY WIRES INCREMENTALLY SUCH THAT THE POLES WILL REMAIN VERTICAL (WITHIN A 6" TOLERANCE AT THE TOP) UNDER THE SIGNAL HEAD ASSEMBLY LOADS. FOR FINAL SAG IN SPAN WIRE, SEE ELEVATION.
   - F. INSTALL MESSENGER WIRE AS PER NOTE 16.
10. INSPECT AND ADJUST CABLES AS NECESSARY AND TIGHTEN 3-BOLT CLAMPS WEEKLY TO COMPENSATE FOR STRETCH IN WIRE CABLES.
11. IF THE ACTUAL CONFIGURATION OF SIGNAL HEADS GENERATES A HEAVIER LOADING THAN WHAT IS SHOWN ON THE DESIGN LOADING CONFIGURATION, THE CONTRACTOR SHALL SUBMIT DESIGN CALCULATIONS TO THE ENGINEER FOR APPROVAL.
12. THE POLES SHALL BE CLASS H-3, DOUGLAS FIR OR SOUTHERN PINE OF 65.0' LENGTH. AFTER INSTALLATION, THE POLES SHALL BE CUT FROM THE TOP TO AN APPROPRIATE LENGTH.
13. MESSENGER WIRE SHALL BE 1/2" DIAMETER, HIGH-STRENGTH GRADE, GALVANIZED, 7-WIRE STRAND WITH 18.8 KIP BREAKING STRENGTH.
14. ALL TEMPORARY SIGNALS SHALL BE POLYCARBONATE.
15. SIGNAL WIRE SHALL BE IN ACCORDANCE WITH NJDOT STANDARDS.
16. MESSENGER WIRE SHALL BE INSTALLED WITH A SAG (1.5' MIN., 2.0' MAX. AT LOWEST POINT OF SPAN) TO OBTAIN RANGE OF TENSION USED IN THE DESIGN OF THE WIRE. ONCE MESSENGER WIRE IS INSTALLED, THE SAG SHALL BE REVERSED BY LIFTING AND CONNECTING THE WIRE TO THE SIGNAL HEAD ASSEMBLIES.
17. FOR WIRE CONNECTIONS, SIGNAL HEAD ASSEMBLY AND FOUNDATION DETAILS, SEE SHEET TTS-4.
18. THE CONTRACTOR SHALL VERIFY THE LOCATION, DEPTH AND HEIGHT OF ALL UNDERGROUND AND OVERHEAD UTILITIES AND SHALL ADJUST THE DESIGN IF NECESSARY AS APPROVED BY THE ENGINEER.
19. THE CONTRACTOR SHALL SUBMIT CALCULATIONS FOR THE ATTACHMENT HARDWARE OF THE CONTROLLER ASSEMBLY TO THE WOOD POLE TO THE ENGINEER FOR REVIEW. THE CALCULATIONS SHALL BE CERTIFIED BY A LICENSED N.J. STRUCTURAL ENGINEER.
20. THE CONTRACTOR SHALL SUPPLY CATALOG CUTS FOR THE POLE MOUNTED CONTROLLER CABINET AND METER ASSEMBLY TO THE ENGINEER FOR APPROVAL.
21. IMAGE DETECTOR UNIT TO BE PER TEMPORARY TRAFFIC SIGNAL PLAN. LOCATE AND ADJUST IMAGE DETECTOR UNIT FOR OPTIMAL DETECTION THROUGHOUT THE STAGE OF CONSTRUCTION.

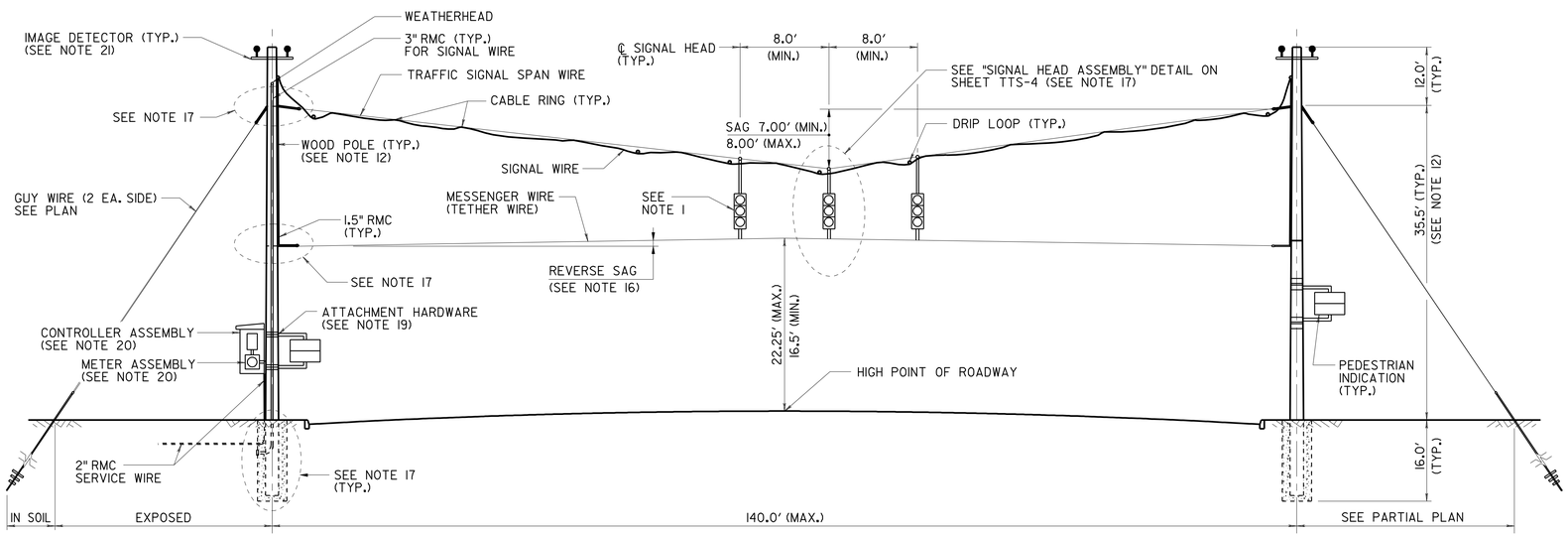

TYPICAL ELEVATION – DIAGONAL SPAN

WITH OVER-THE-ROADWAY TRAFFIC SIGNALS
(LOOKING UPSTATION)
N.T.S.

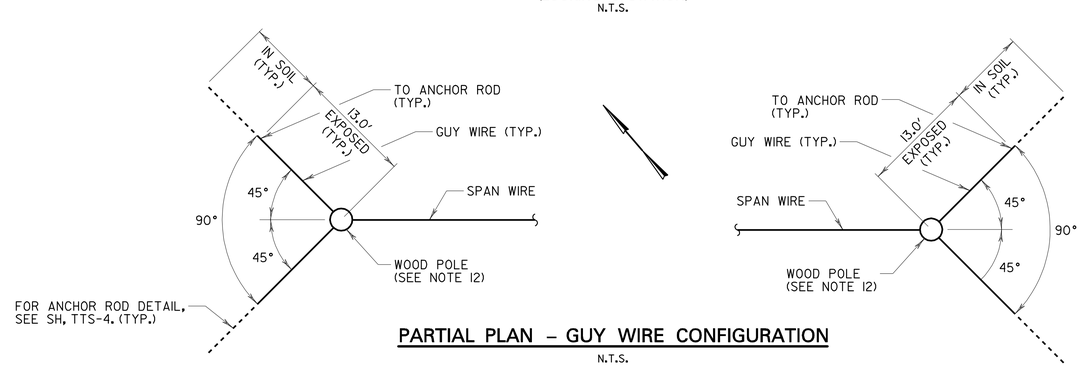

PARTIAL PLAN – GUY WIRE CONFIGURATION

N.T.S.

ROUTE U.S. 46 & BERGEN TURNPIKE

SCALE IN FEET
30' 20' 10' 0 30' 60'

TTS-4 / TTS-4

NEW JERSEY DEPARTMENT OF TRANSPORTATION

TEMPORARY TRAFFIC SIGNAL PLANS

ROUTE U.S. 46 LITTLE FERRY CIRCLE

CONTRACT NO. 069950373

PARSONS BRINCKERHOFF, INC.
CERTIFICATION OF AUTHORIZATION NO. 24GA28029800

STEWART R. GORDON
N.J. PROFESSIONAL ENGINEER NO. 24GE03660800

PARSONS BRINCKERHOFF CADD DATA

OPERATOR	Carnevale	QUEUE	\\ampr1pr-t01\PRIPL03_BW.JP
PLOT DATE	07-MAR-2013 15:19		
PENTABLE	tc.tbl		
DESIGN FILE	T:\20063\Trf\tts03.dgn		

STATE	FEDERAL PROJECT NO.
N.J.	

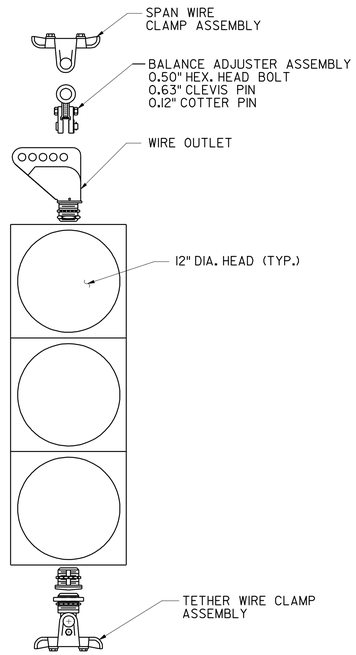

TYPICAL SIGNAL HEAD ASSEMBLY

N.T.S.

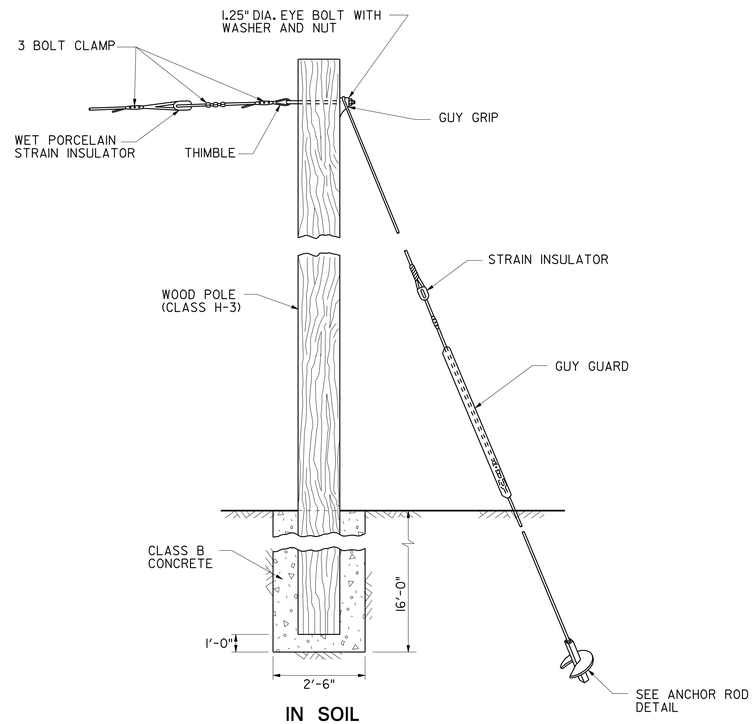

IN SOIL

WOOD POLE INSTALLATION

N.T.S.

NOTES:

1. SHAFT MATERIAL SHALL BE IN ACCORDANCE WITH ASTM A29-(LATEST REVISION) OR APPROVED MECHANICAL EQUIVALENT.
2. HELIX MATERIAL SHALL BE IN ACCORDANCE WITH ASTM A936 HOT ROLLED HIGH STRENGTH LOW ALLOY STEEL SHEET OR ASTM A656 HOT ROLLED STRUCTURAL STEEL PLATE.
3. COUPLING BOLTS SHALL BE ¾" DIAMETER BOLTS X 3" LONG HEX HEAD IN ACCORDANCE WITH ASTM A320 GRADE L7.
4. ALL WELDING SHALL BE DONE BY WELDERS CERTIFIED UNDER SECTION 5 OF THE AWS D1.1.
5. LEAD AND EXTENSION SECTIONS LENGTHS AND HELIX SPACING SHOWN ARE NOMINAL DIMENSIONS. MINOR VARIATIONS MAY BE EXPECTED.
6. NOMINAL SPACING BETWEEN HELIX PLATES IS THREE TIMES THE DIAMETER OF THE SMALLER HELIX.
7. THE CONTRACTOR SHALL SUBMIT HIS PROPOSED PROCEDURE FOR INSTALLATION OF THE DRILLED SHAFT, WOOD POLE, AND HELICAL ANCHOR FOR APPROVAL BY THE ENGINEER.

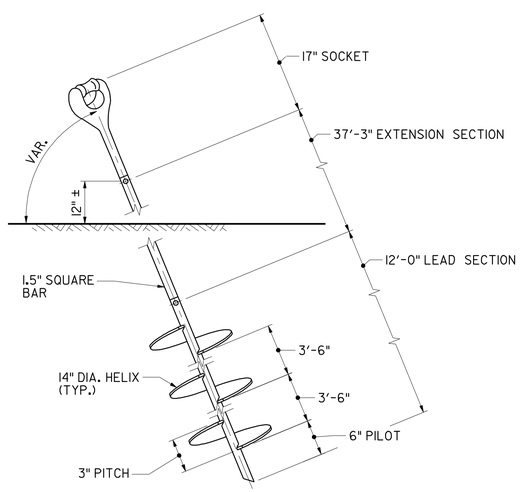

IN SOIL

ANCHOR ROD DETAIL

(WITH EXTENSION)

N.T.S.

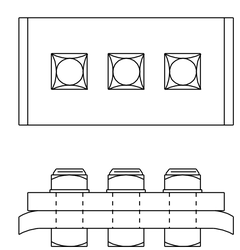

3 – BOLT GUY CLAMP

N.T.S.

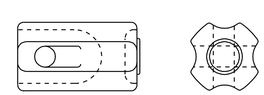

STRAIN INSULATOR

N.T.S.

SCALE IN FEET

30' 20' 10' 0 30' 60'

TTS-4

TTS-4

NEW JERSEY DEPARTMENT OF TRANSPORTATION

TEMPORARY TRAFFIC SIGNAL PLANS

ROUTE U.S. 46 LITTLE FERRY CIRCLE

CONTRACT NO. 069950373

PARSONS BRINCKERHOFF, INC.
CERTIFICATION OF AUTHORIZATION NO. 24GA28029800

STEWART R. GORDON
N.J. PROFESSIONAL ENGINEER NO. 24GE03660800

PARSONS BRINCKERHOFF CADD DATA

OPERATOR	Carnevale	QUEUE	\\amprlpr-t01\PRIPLO3_BW.IP
PLOT DATE	07-MAR-2013 15:19		
PENTABLE	+c.tbl		
DESIGN FILE	T:\20063\Trf\tts04.dgn		

STATE	FEDERAL PROJECT NO.
N.J.	

BOROUGH OF LITTLE FERRY

COUNTY OF BERGEN

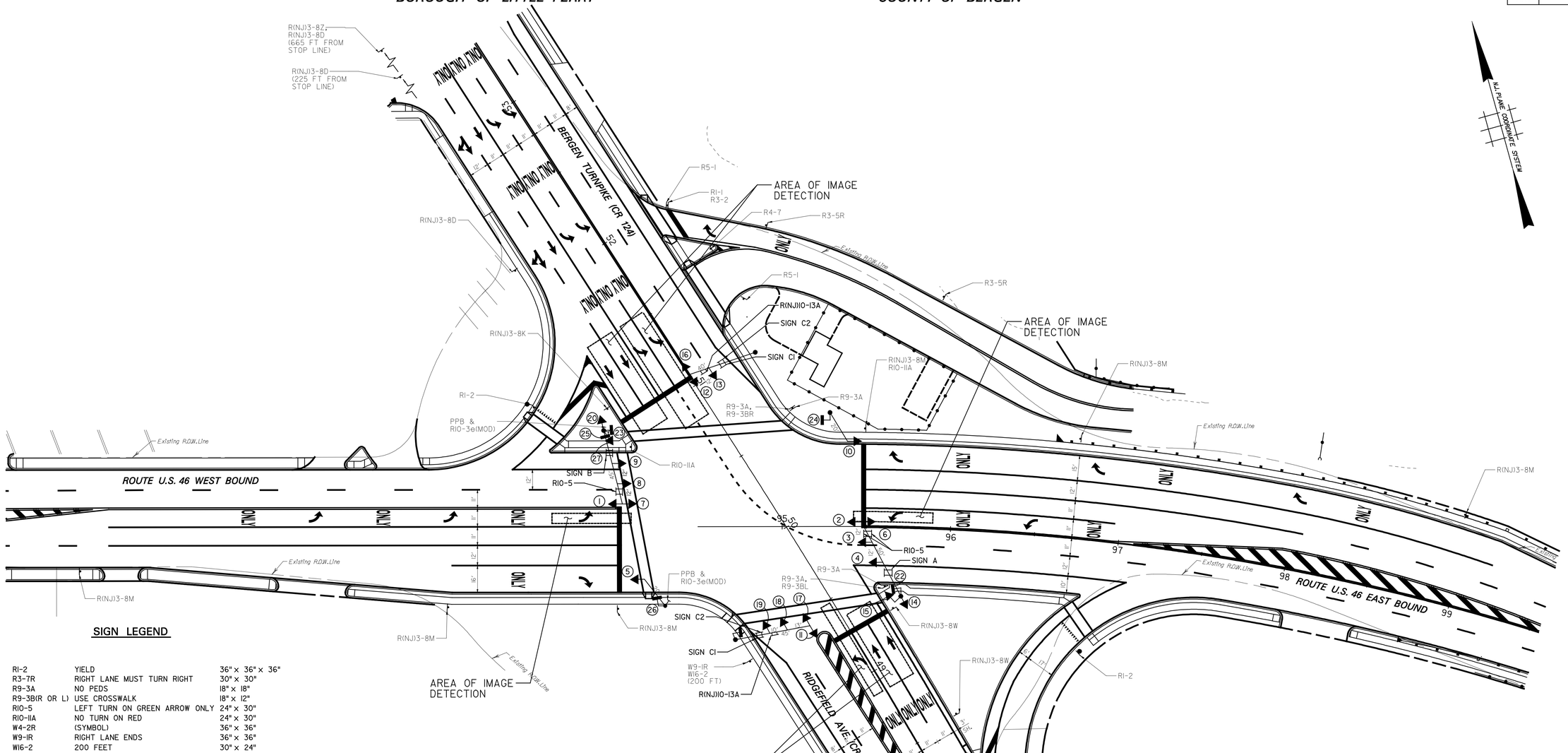

SIGN LEGEND

R1-2	YIELD	36" x 36" x 36"
R3-7R	RIGHT LANE MUST TURN RIGHT	30" x 30"
R9-3A	NO PEDS	18" x 18"
R9-3B(R OR L)	USE CROSSWALK	18" x 12"
R10-5	LEFT TURN ON GREEN ARROW ONLY	24" x 30"
R10-11A	NO TURN ON RED	24" x 30"
W4-2R	(SYMBOL)	36" x 36"
W9-1R	RIGHT LANE ENDS	36" x 36"
W16-2	200 FEET	30" x 24"

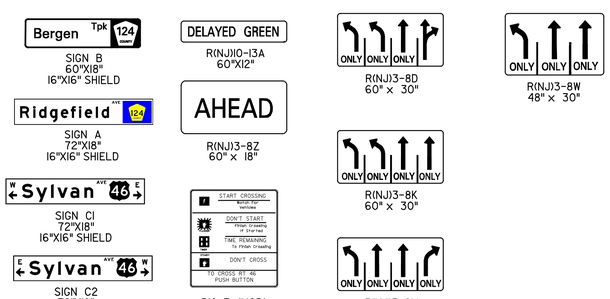

SIGNAL LEGEND

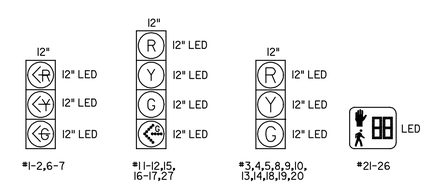

1. SIGNAL HEADS #14, 15, 20 AND 27 SHALL BE MOUNTED AT A HEIGHT OF 12 FEET.

ROUTE U.S. 46 AND BERGEN TURNPIKE

SCALE IN FEET

30' 20' 10' 0 30' 60'

TSP-1 / TSP-2

NEW JERSEY DEPARTMENT OF TRANSPORTATION

TRAFFIC SIGNAL PLANS

ROUTE U.S. 46 LITTLE FERRY CIRCLE

CONTRACT NO. 069950373

PARSONS BRINCKERHOFF, INC.

CERTIFICATION OF AUTHORIZATION NO. 24GA28029800

STEWART R. GORDON

N.J. PROFESSIONAL ENGINEER NO. 24GE03660800

PARSONS BRINCKERHOFF CADD DATA

OPERATOR	Carrevale	QUEUE	\\ampr1pr-t01\PRIPL03_BW.IP
PLOT DATE	07-MAR-2013 15:17		
PENTABLE	elec.tbl		
DESIGN FILE	T:\20063\Trf\tsp01.dgn		

STATE	FEDERAL PROJECT NO.
N.J.	

BOROUGH OF LITTLE FERRY

COUNTY OF BERGEN

N.J. PLANE COORDINATE SYSTEM

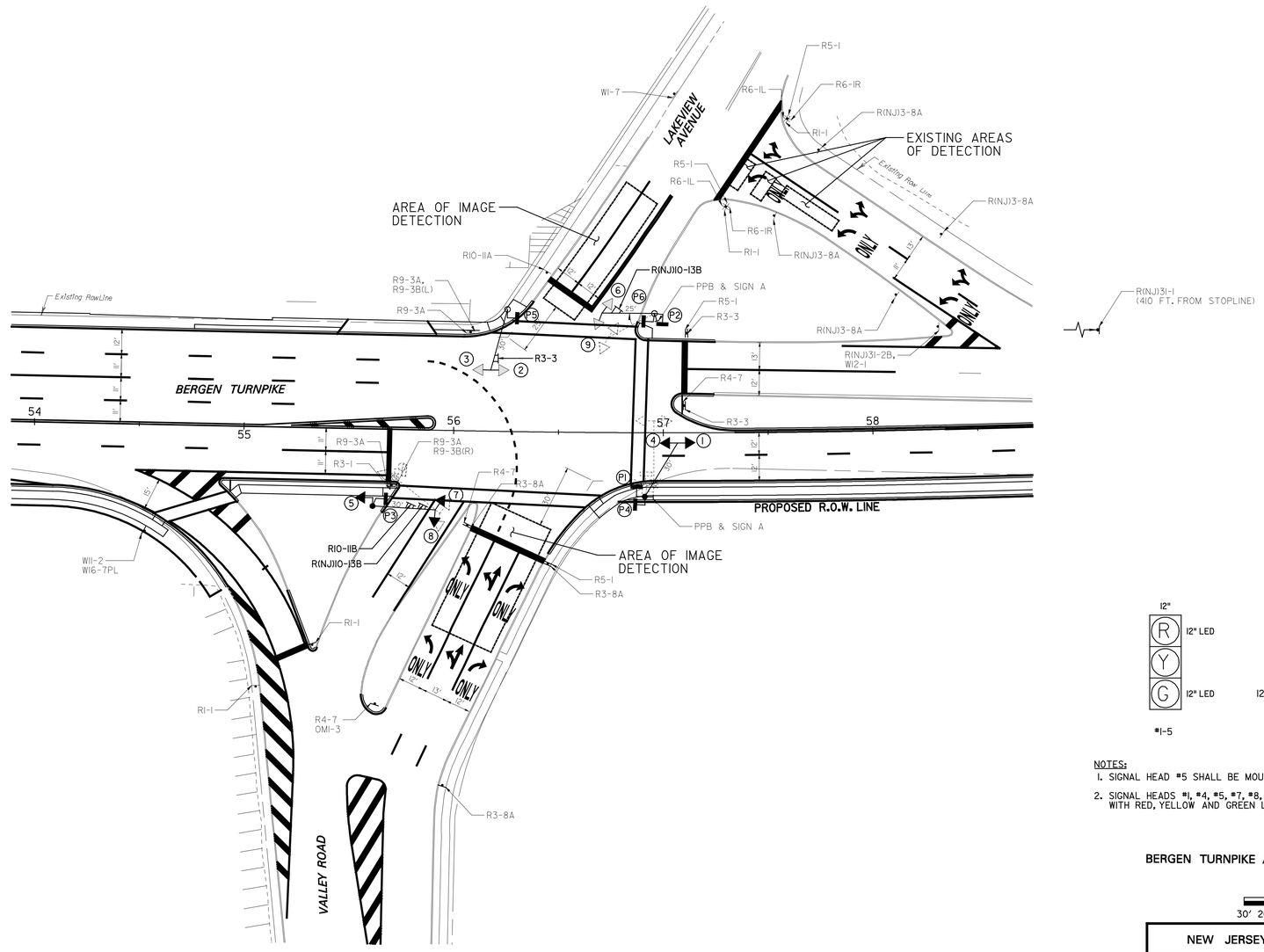

SIGN LEGEND

R1-1	STOP	30" x 30"
R3-1	NO RIGHT TURN (SYMBOL)	24" x 24"
R3-2	NO LEFT TURN (SYMBOL)	24" x 24"
R3-3	NO TURNS	24" x 24"
R3-8A	LANE USE SIGN	48" x 30"
R4-7	KEEP RIGHT (SYMBOL)	24" x 30"
R5-1	DO NOT ENTER	30" x 30"
R6-1(L)	ONE WAY (LEFT)	36" x 12"
R6-1(R)	ONE WAY (RIGHT)	36" x 12"
R9-3A	USE PEDESTRIAN CROSSWALK	18" x 18"
R9-3B(L OR R)	USE CROSSWALK (LEFT OR RIGHT)	18" x 12"
R10-11a	NO TURN ON RED	24" x 30"
R10-11B	NO TURN ON RED	24" x 24"
W1-7	TWO DIRECTIONAL ARROW (SYMBOL)	48" x 24"
W11-2	PEDESTRIAN (SYMBOL)	36" x 36"
W16-7PL	ARROW	21" x 15"

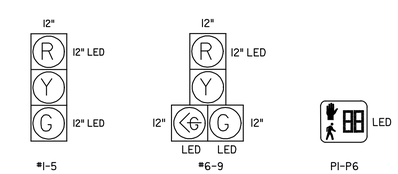

NOTES:

1. SIGNAL HEAD #5 SHALL BE MOUNTED AT A HEIGHT OF 12 FEET.
2. SIGNAL HEADS #1, #4, #5, #7, #8, SHALL BE NEW AND INSTALLED WITH RED, YELLOW AND GREEN LEDS.

BERGEN TURNPIKE AND LAKEVIEW AVENUE – VALLEY ROAD

SCALE IN FEET

30' 20' 10' 0 30' 60'

TSP-2 / TSP-2

NEW JERSEY DEPARTMENT OF TRANSPORTATION

TRAFFIC SIGNAL PLANS

ROUTE U.S. 46 LITTLE FERRY CIRCLE

CONTRACT NO. 069950373

PARSONS BRINCKERHOFF, INC.
CERTIFICATION OF AUTHORIZATION NO. 24GA28029800

STEWART R. GORDON
N.J. PROFESSIONAL ENGINEER NO. 24GE03660800

PARSONS BRINCKERHOFF CADD DATA

OPERATOR	Carnevale	QUEUE	\\ampr1pr-t01\PRIPL03_BW1.IP
PLOT DATE	07-MAR-2013 15:17		
PENTABLE	elec.tbl		
DESIGN FILE	T:\20063\Tr-f\tsp02.dgn		

ITEM NO.	TO BE CONSTRUCTED	CONTRACT QUANTITY
606012P	CONCRETE SIDEWALK 4" THICK	2 SY
701015P	2" RIGID METALLIC CONDUIT	162 LF
701021P	3" RIGID METALLIC CONDUIT	823 LF
701102M	18" x 36" JUNCTION BOX	7 UNIT
701132M	FOUNDATION, TYPE P- MC	1 UNIT
701171M	METER CABINET, TYPE TL	1 UNIT
701123M	FOUNDATION, TYPE SFT	3 UNIT
701138M	FOUNDATION, TYPE STF	3 UNIT
701159M	FOUNDATION, TYPE IM-MC	1 UNIT
701177M	METER CABINET, TYPE IM-MC	1 UNIT
701201P	MULTIPLE LIGHTING WIRE, NO. 8 AWG	1965 LF
701213P	SERVICE WIRE, NO. 6 AWG	220 LF
701192P	GROUND WIRE, NO. 8 AWG	985 LF
702009M	CONTROLLER, 8 PHASE	1 UNIT
702012M	TRAFFIC SIGNAL STANDARD, ALUMINUM	2 UNIT
702015M	TRAFFIC SIGNAL STANDARD, STEEL	4 UNIT
702024M	TRAFFIC SIGNAL MAST ARM, STEEL	4 UNIT
702036M	TRAFFIC SIGNAL HEAD	20 UNIT
702039M	PEDESTRIAN SIGNAL HEAD	6 UNIT
702042M	PUSH BUTTON	2 UNIT
702045M	IMAGE DETECTOR	4 UNIT
702060M	CONTROLLER TURN-ON	1 LS
702027P	TRAFFIC SIGNAL CABLE, 2 CONDUCTOR	525 LF
702030P	TRAFFIC SIGNAL CABLE, 5 CONDUCTOR	1825 LF
702033P	TRAFFIC SIGNAL CABLE, 10 CONDUCTOR	1950 LF
702021M	TRAFFIC SIGNAL MAST ARM, ALUMINUM	2 UNIT
703012M	LIGHTING MAST ARM, ALUMINUM	6 UNIT
703018M	LUMINAIRE	6 UNIT

STATE	FEDERAL PROJECT NO.
N.J.	

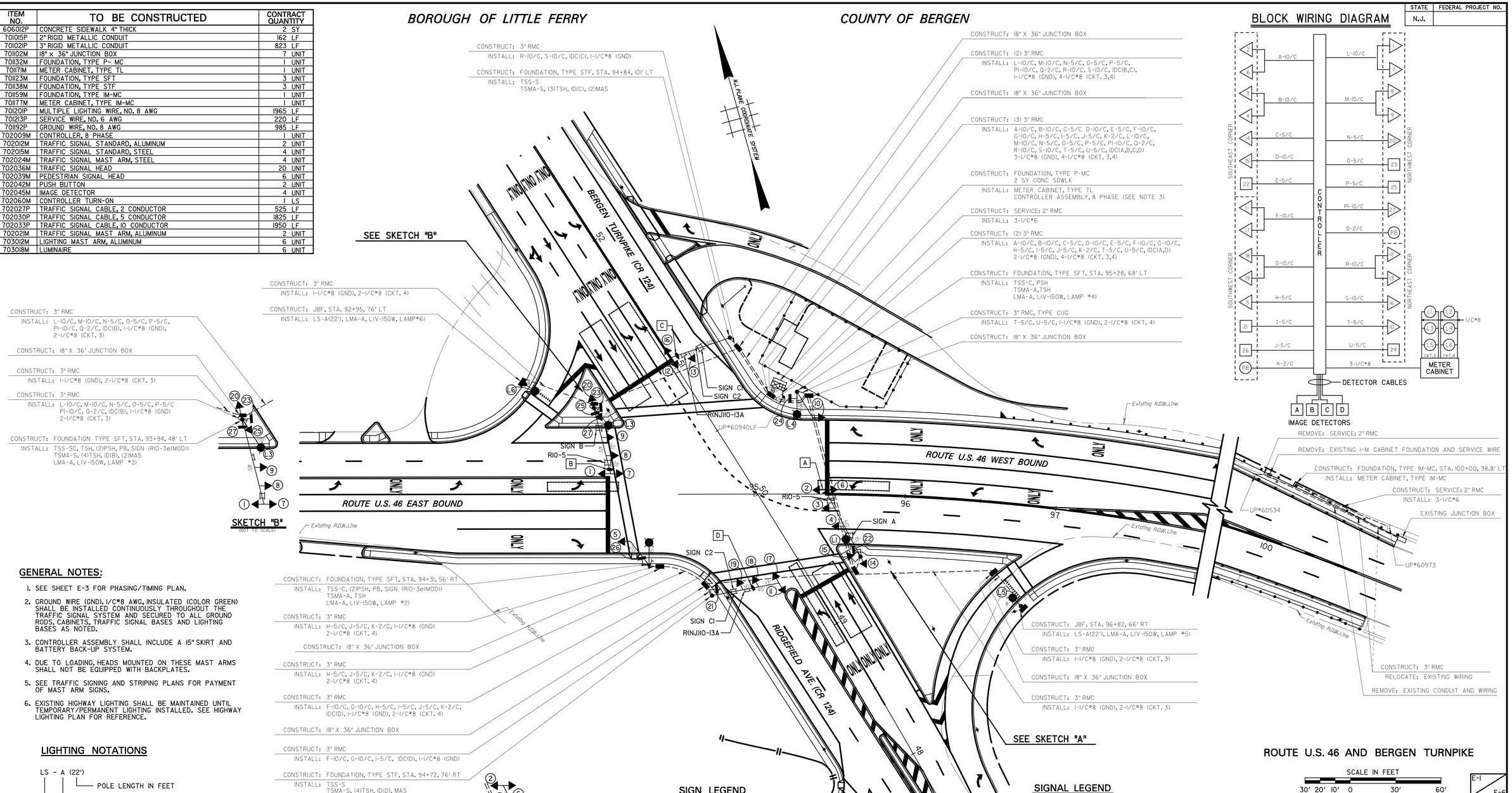

GENERAL NOTES:

1. SEE SHEET E-3 FOR PHASING/TIMING PLAN.
2. GROUND WIRE (GND), 1/C*8 AWG, INSULATED (COLOR GREEN) SHALL BE INSTALLED CONTINUOUSLY THROUGHOUT THE TRAFFIC SIGNAL SYSTEM AND SECURED TO ALL GROUND RODS, CABINETS, TRAFFIC SIGNAL BASES AND LIGHTING BASES AS NOTED.
3. CONTROLLER ASSEMBLY SHALL INCLUDE A 15" SKIRT AND BATTERY BACK-UP SYSTEM.
4. DUE TO LOADING, HEADS MOUNTED ON THESE MAST ARMS SHALL NOT BE EQUIPPED WITH BACKPLATES.
5. SEE TRAFFIC SIGNING AND STRIPING PLANS FOR PAYMENT OF MAST ARM SIGNS.
6. EXISTING HIGHWAY LIGHTING SHALL BE MAINTAINED UNTIL TEMPORARY/PERMANENT LIGHTING INSTALLED. SEE HIGHWAY LIGHTING PLAN FOR REFERENCE.

LIGHTING NOTATIONS

LS - A (22')
- POLE LENGTH IN FEET
- ALUMINIUM
- LIGHTING STANDARD

LMA - A , L - (V - 150W, LAMP #1)
- LAMP NUMBER
- 150 WATT HPS
- VERTICAL TYPE
- LUMINAIRE
- ALUMINIUM
- LIGHTING MAST ARM

ROUTE U.S. 46 AND BERGEN TURNPIKE

SCALE IN FEET
30' 20' 10' 0 30' 60'

E-1 / E-6

NEW JERSEY DEPARTMENT OF TRANSPORTATION

ELECTRICAL PLANS

ROUTE U.S. 46 LITTLE FERRY CIRCLE

CONTRACT NO. 069950373

PARSONS BRINCKERHOFF, INC.
CERTIFICATION OF AUTHORIZATION NO. 24GA28029800

STEWART R. GORDON
N.J. PROFESSIONAL ENGINEER NO. 24GE03660800

66

PARSONS BRINCKERHOFF CADD DATA

OPERATOR	Carnevale	QUEUE	\\dmprlpr-t01\PRIP.L03_BW.IP
PLOT DATE	07-MAR-2013 15:09		
PENTABLE	elec.tbl		
DESIGN FILE	T:\20063\Tr-Fve0ld.dgn		

STATE	FEDERAL PROJECT NO.
N.J.	

ITEM NO.	TO BE CONSTRUCTED	CONTRACT QUANTITY
702110M	BC TRAFF SIG POLE FOUNDATION, 12" DIA	2 UNIT
701095M	JUNCTION BOX, PVC PLASTIC (NOTES 1&9)	2 UNIT
702078M	TRAFFIC SIGNAL ASS'Y 12" DIA. POLE TYPE 30MA-2(NOTE 5)	2 UNIT
702109P	TRAFFIC SIGNAL ASS'Y, CLAMP MOUNTED (NJDOT) (NOTE 6)	1 UNIT
702039M	PEDESTRIAN SIGNAL HEAD	6 UNIT
702042M	PUSHBUTTON	1 UNIT
701030P	3" RIGID NON METALLIC CONDUIT	41 LF
702032P	TRAFFIC SIGNAL CABLE, 5 CONDUCTER (NOTE 4)	965 LF
702030P	TRAFFIC SIGNAL CABLE, 7 CONDUCTER (NOTE 4)	380 LF
702045P	IMAGE DETECTOR	2 UNIT
702051P	PPB & LOOP LEAD - IN WIRE (NOTE 3)	145 LF
701192P	GROUND WIRE, NO. 8 AWG	282 LF

LEGEND

COUNTY CODE	DESCRIPTION
SFTBC-2	BC TRAFF SIG POLE FOUNDATION, 12" DIA
JBP	JUNCTION BOX, PVC PLASTIC
30M2	TRAFFIC SIGNAL ASS'Y 12" DIA. POLE TYPE 30M2
C 1	TRAFFIC SIGNAL ASS'Y, CLAMP MOUNTED
W2(NJDOT)	4 1/2 " PED. SIGNAL (NJDOT CLAMP)
PPB	PEDESTRIAN PUSHBUTTON
3" CUG	3" RNMC
112" CUG	11/2 " RMC, UNDER GROUND
14/7	7 CONDUCTOR SIGNAL CABLE
14/5	5 CONDUCTOR SIGNAL CABLE
14/2TPSH	PPB & LOOP LEAD - IN WIRE (TRAFFIC SIGNAL CABLE, 2 CONDUCTOR)
THWN	AWG #8 BONDING WIRE, STRANDED

EXISTING LOOP SCHEDULE

LETTER	SIZE	Ø	TURNS	(VALUE) MH
A	7'X30'	4	3	
B	6'X13'	4	4	
C	6'X16'	4	4	

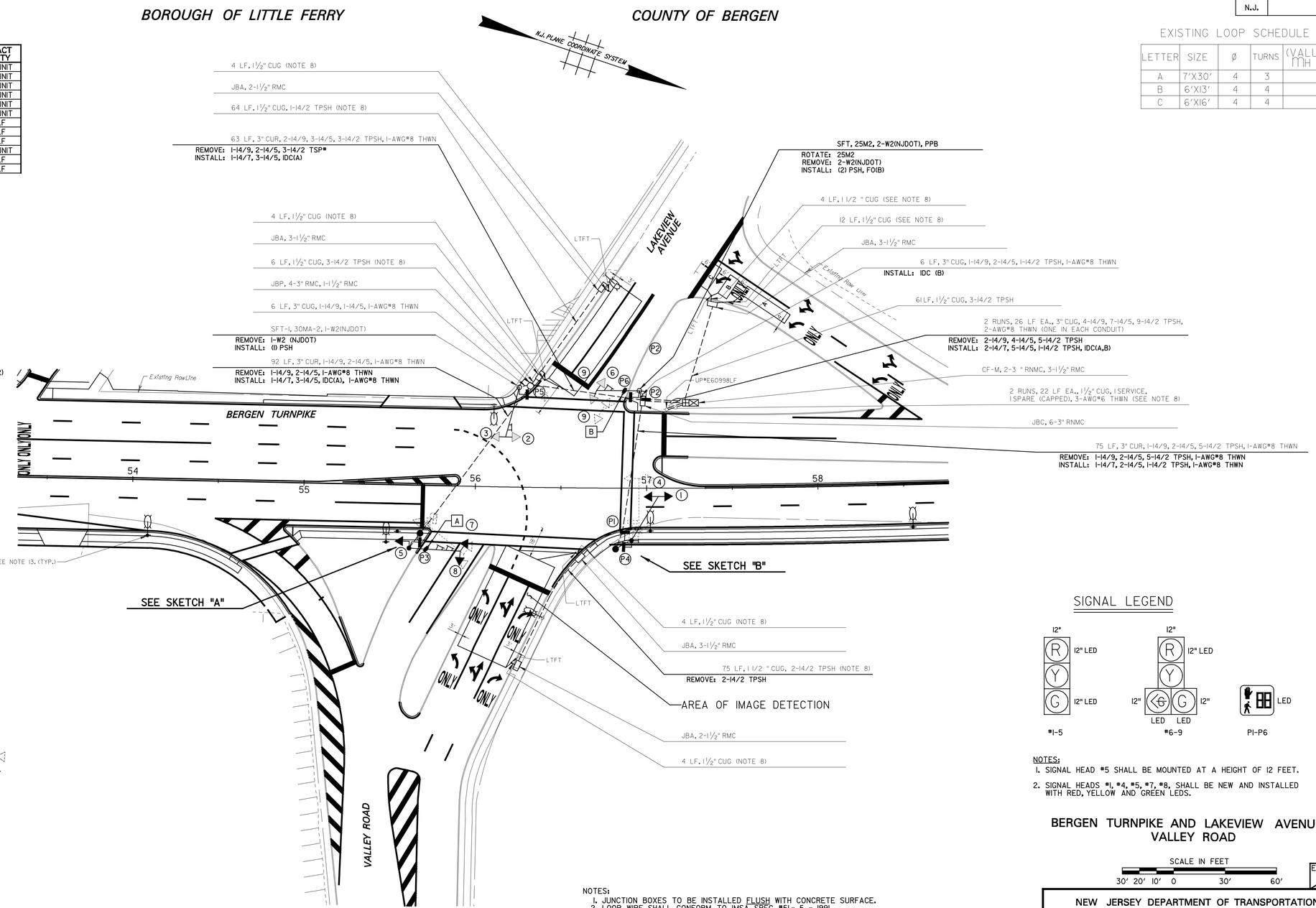

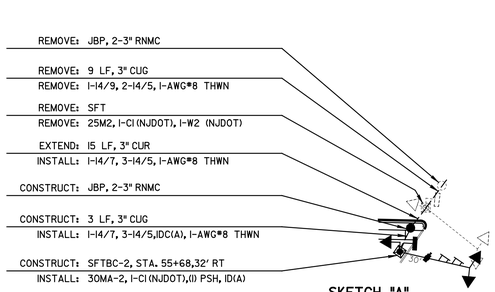

SKETCH "A"
(NOT TO SCALE)

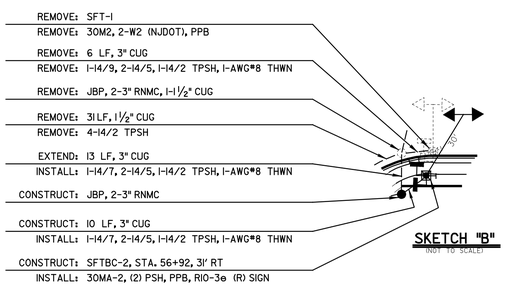

SKETCH "B"
(NOT TO SCALE)

SIGN LEGEND

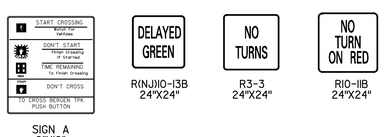

SIGN A
9"X12"

R(NJ)10-13B
24"X24"

R3-3
24"X24"

R10-11B
24"X24"

SIGNAL LEGEND

NOTES:
1. SIGNAL HEAD #5 SHALL BE MOUNTED AT A HEIGHT OF 12 FEET.
2. SIGNAL HEADS #1, #4, #5, #7, #8, SHALL BE NEW AND INSTALLED WITH RED, YELLOW AND GREEN LEDS.

NOTES:
1. JUNCTION BOXES TO BE INSTALLED FLUSH WITH CONCRETE SURFACE.
2. LOOP WIRE SHALL CONFORM TO IMSA SPEC. #51- 5 - 1991.
3. LOOP LEAD IN & PED. PUSHBUTTON CABLE (14/2TPSH), SHALL CONFORM TO IMSA #50 - 2 - 1998.
4. JACKETED SIGNAL CABLE, (14/7, 14/5), SHALL CONFORM TO IMSA SPEC. #19 - 1- 1998 OR 20-1-1998.
5. OTR SIGNAL HEIGHT TO BE MAINTAINED AT 16'0".
6. PEDESTRIAN SIGNAL HEIGHT TO BE CLAMPED AT 9'0", VEHICLE SIGNAL AT 12' HEIGHT.
7. CONTRACTOR(S) MAY ALTER JB & CONDUIT PLACEMENTS IF THERE IS UNDERGROUND INTERFERENCE.
8. SERVICE/SPARE & LTFT CONDUITS TO BE 11/2 " RMC, GALVANIZED.
9. JUNCTION BOXES HAVE 3/4 " X10' GROUND RODS INSTALLED AT THE ENGINEER'S DISCRETION.
10. RNMC INSTALLED IN TRAFFIC LOAD BEARING AREAS SHALL BE INSTALLED IN ACCORDANCE WITH 1996 NEC ARTICLE #347 - 2(G), OR AS STATED IN THE SPECIFICATIONS.
11. CONTRACTOR TO STUDY UTILITIES PLAN & CALL FOR ALL APPROPRIATE MARKOUTS PRIOR TO ANY TRENCHING.
12. SALVAGED SIGNING AND TRAFFIC SIGNAL EQUIPMENT SHALL BE RETURNED TO THE COUNTY OF BERGEN PER THE SPECIFICATIONS.
13. INTERSECTION LIGHTING PROVIDED BY UTILITY-POLE MOUNTED LUMINAIRES IN LOCATIONS SHOWN.
14. EXISTING LUMINAIRES TO BE MOUNTED BY UTILITY COMPANY ON RELOCATED POLES. SEE TRAFFIC SIGNING AND STRIPING PLANS FOR PAYMENT OF MAST ARM SIGNS.
15. MAINTAIN EXISTING SIGNAL OPERATION UNTIL NEW EQUIPMENT IS OPERATIONAL.
16. SEE SUPPLEMENTAL SPECIFICATIONS FOR BERGEN COUNTY ELECTRICAL ITEMS.

BERGEN TURNPIKE AND LAKEVIEW AVENUE – VALLEY ROAD

SCALE IN FEET
30' 20' 10' 0 30' 60'

E-2 / E-6

NEW JERSEY DEPARTMENT OF TRANSPORTATION

ELECTRICAL PLANS

ROUTE U.S. 46 LITTLE FERRY CIRCLE

CONTRACT NO. 069950373

PARSONS BRINCKERHOFF, INC.
CERTIFICATION OF AUTHORIZATION NO. 24GA28029800

STEWART R. GORDON
N.J. PROFESSIONAL ENGINEER NO. 24GE03660800

PARSONS BRINCKERHOFF CADD DATA

OPERATOR	Carnevale	QUEUE	\\ampr1pr+t01\PRIPL03.BW.IP
PLOT DATE	07-MAR-2013 15:09		
PENTABLE	elec.tbl		
DESIGN FILE	T:\20063\Tr+f\e02.dgn		

STATE	FEDERAL PROJECT NO.
N.J.	

Signal Timing Schedule
Route U.S.46 and Bergen Turnpike
Little Ferry Borough — Bergen County

90/120 SECOND BACKGROUND CYCLE

SIGNAL INDICATIONS

Without Pedestrian Actuation

	1,2,6,7	3-5,8-10	11,12,27	13,14	15-17	18-20	21-24	25,26	Timing I (seconds)	Timing II (seconds)
A. Route U.S. 46 EB/WB Left Turns	<G-	R	R	R	R	R	DW	DW	7-12	7-22
Change	<Y-	R	R	R	R	R	DW	DW	3	3
Clearance	<R-	R	R	R	R	R	DW	DW	3	3
B. Route U.S. 46 R.O.W.	<R-	G	R	R	R	R	W	DW	18-5	48-19
Pedestrian Clearance	<R-	G	R	R	R	R	FDW	DW	24	24
Change	<R-	Y	R	R	R	R	DW	DW	5*	5*
Clearance	<R-	R	R	R	R	R	DW	DW	2	2
C. Bergen Turnpike NB R.O.W.	<R-	R	<G-/G	G	R	R	DW	DW	7	7-8
Change	<R-	R	Y	Y	R	R	DW	DW	4	4
Clearance	<R-	R	R	R	R	R	DW	DW	3	3
D. Bergen Turnpike SB R.O.W.	<R-	R	R	R	<G-/G	G	DW	DW	7-15	7-20
Change	<R-	R	R	R	Y	Y	DW	DW	4	4
Clearance	<R-	R	R	R	R	R	DW	DW	3	3

With Pedestrian Actuation **

A. Route U.S. 46 EB/WB Left Turns	<G-	R	R	R	R	R	DW	DW	7	7-22
Change	<Y-	R	R	R	R	R	DW	DW	3	3
Clearance	<R-	R	R	R	R	R	DW	DW	3	3
B. Route U.S. 46 R.O.W.	<R-	G	R	R	R	R	W	DW	5	25-9
Pedestrian Clearance	<R-	G	R	R	R	R	FDW	DW	24	24
Change	<R-	Y	R	R	R	R	DW	DW	5*	5*
Clearance	<R-	R	R	R	R	R	DW	DW	2	2
C. Bergen Turnpike NB R.O.W.	<R-	R	<G-/G	G	R	R	DW	DW	7	7-8
Change	<R-	R	Y	Y	R	R	DW	DW	4	4
Clearance	<R-	R	R	R	R	R	DW	DW	3	3
D. Bergen Turnpike SB R.O.W.	<R-	R	R	R	<G-/G	G	DW	W	7	7
Pedestrian Clearance	<R-	R	R	R	<G-/G	G	DW	FDW	23	23
Change	<R-	R	R	R	Y	Y	DW	DW	4	4
Clearance	<R-	R	R	R	R	R	DW	DW	3	3
Emergency Flashing Operation	<R-	Y	R	R	R	R	DARK	DARK	--	--

The manual controls to be disconnected

The vehicle extensions are to be set at 2 seconds.

The memory circuits are to be OFF.

The left turn slots (Phase A) are to be separate phases but concurrently started if actuation occurs in both slots. Each left turn slot has the capability of terminating or extending separately or independently of each other, thereby reverting the timing to the non-conflicting Phase B movement.

The 120 second cycle (Timing II) is to be in operation the following hours:
7:00 AM- 7:00 PM (Monday - Friday)

The 90 second cycle (Timing I) is to be in operation at all other times.

* An offset of 35 and 42 seconds for Timing I and Timing II, respectively will be measured from the beginning of yellow to Route U.S. 46 traffic at Liberty Street to the beginning of yellow to Route U.S. 46 traffic at this intersection.

** With pedestrian push button actuation, the Timing I cycle length will be exceeded. As such, the times shown exceed the total background cycle length; the controller shall be programmed to guarantee a minimum 7 second walk interval to Phase "D" when the pedestrian override feature requires the cycle length to be exceeded.

Signal Timing Schedule
Bergen Turnpike and Lakeview Avenue - Valley Road
Little Ferry Borough — Bergen County

90 SECOND BACKGROUND CYCLE

SIGNAL INDICATIONS

Without Pedestrian Actuation

	1,2	3-5	6,7	8-9	P1-P2	P3-P6	Timing (seconds)
A. Bergen Tpk.	G	G	R	R	DW	W	31.3-7.3
Pedestrian Clearance	G	G	R	R	DW	FDW	21
Change	Y	Y(5)	R	R	DW	DW	4.5
Clearance	R	R(5)	R	R	DW	DW	1.7
Hold							
B. Fire Pre-empt	(6)	(6)	(6)	(6)	FDW	FDW	10
Change	Y(7)	G	R	R	DW	DW	4.5
Clearance	R	G	R	R	DW	DW	1.7
Fire R.O.W.	R	G	R	R	DW	DW	15
Change	R	Y	R	R	DW	DW	4.5
Clearance	R	R	R	R	DW	DW	1.7
C. Valley Road	R	R	R	<G/G	DW	DW	10-24
Change	R	R	R	Y	DW	DW	3.5
Clearance	R	R	R	R	DW	DW	2.5
D. Lakeview Avenue	R	R	<G/G	R	DW	DW	10-20
Change	R	R	Y	R	DW	DW	4
Clearance	R	R	R	R	DW	DW	1.5

With Pedestrian Actuation

A. Bergen Tpk.	G	G	R	R	DW	W	17.3-7.3
Pedestrian Clearance	G	G	R	R	DW	FDW	21
Change	Y	Y(5)	R	R	DW	DW	4.5
Clearance	R	R(5)	R	R	DW	DW	1.7
Hold							
B. Fire Pre-empt	(6)	(6)	(6)	(6)	FDW	FDW	10
Change	Y(7)	G	R	R	DW	DW	4.5
Clearance	R	G	R	R	DW	DW	1.7
Fire R.O.W.	R	G	R	R	DW	DW	15
Change	R	Y	R	R	DW	DW	4.5
Clearance	R	R	R	R	DW	DW	1.7
C. Valley Road	R	R	R	<G/G	W	DW	7
Pedestrian Clearance	R	R	R	<G/G	FDW	DW	17
Change	R	R	R	Y	DW	DW	3.5
Clearance	R	R	R	R	DW	DW	2.5
D. Lakeview Avenue	R	R	<G/G	R	DW	DW	10-20
Change	R	R	Y	R	DW	DW	4
Clearance	R	R	R	R	DW	DW	1.5

The manual controls to be disconnected
The memory circuits are to be OFF.
1. Phase A Walk to be set at 7 seconds and Phase A Minimum Green to be set at 7 seconds.
2. A 2 second Vehicle Extension is to be set for Phase C and Phase D.
3. The 90 Second Background Cycle is to be in effect from 7:00 a.m. to 11:00 p.m. daily.
4. Free Float Operation is to be in effect at all other times.
5. If this indication is green when the pre-emption is activated, it shall remain green if Phase B is brought up.
6. A Pre-emption Actuation will hold this interval for a maximum of 10 seconds, if a Pedestrian Clearance has to be brought up.
7. If this indication is green when the pre-emption is activated, it shall become yellow, and if this indication is red, it shall remain red.
8. The signals to go to Phase C and/or Phase D after Phase B, if there is a call for Phase C and/or Phase D.

E-3 / E-6

NEW JERSEY DEPARTMENT OF TRANSPORTATION

ELECTRICAL PLANS

ROUTE U.S. 46 LITTLE FERRY CIRCLE

CONTRACT NO. 069950373

PARSONS BRINCKERHOFF, INC.
CERTIFICATION OF AUTHORIZATION NO. 24GA28029800

STEWART R. GORDON
N.J. PROFESSIONAL ENGINEER NO. 24GE03660800

PARSONS BRINCKERHOFF CADD DATA
OPERATOR Carnevale QUEUE \\amprlpr+01\PRIPL03.BW.LP
PLOT DATE 07-MAR-2013 15:09
PENTABLE elec.tbl
DESIGN FILE T:\20063\Trf\e03.dgn

STATE	FEDERAL PROJECT NO.	SHEET	TOTAL SHEETS
N.J.			

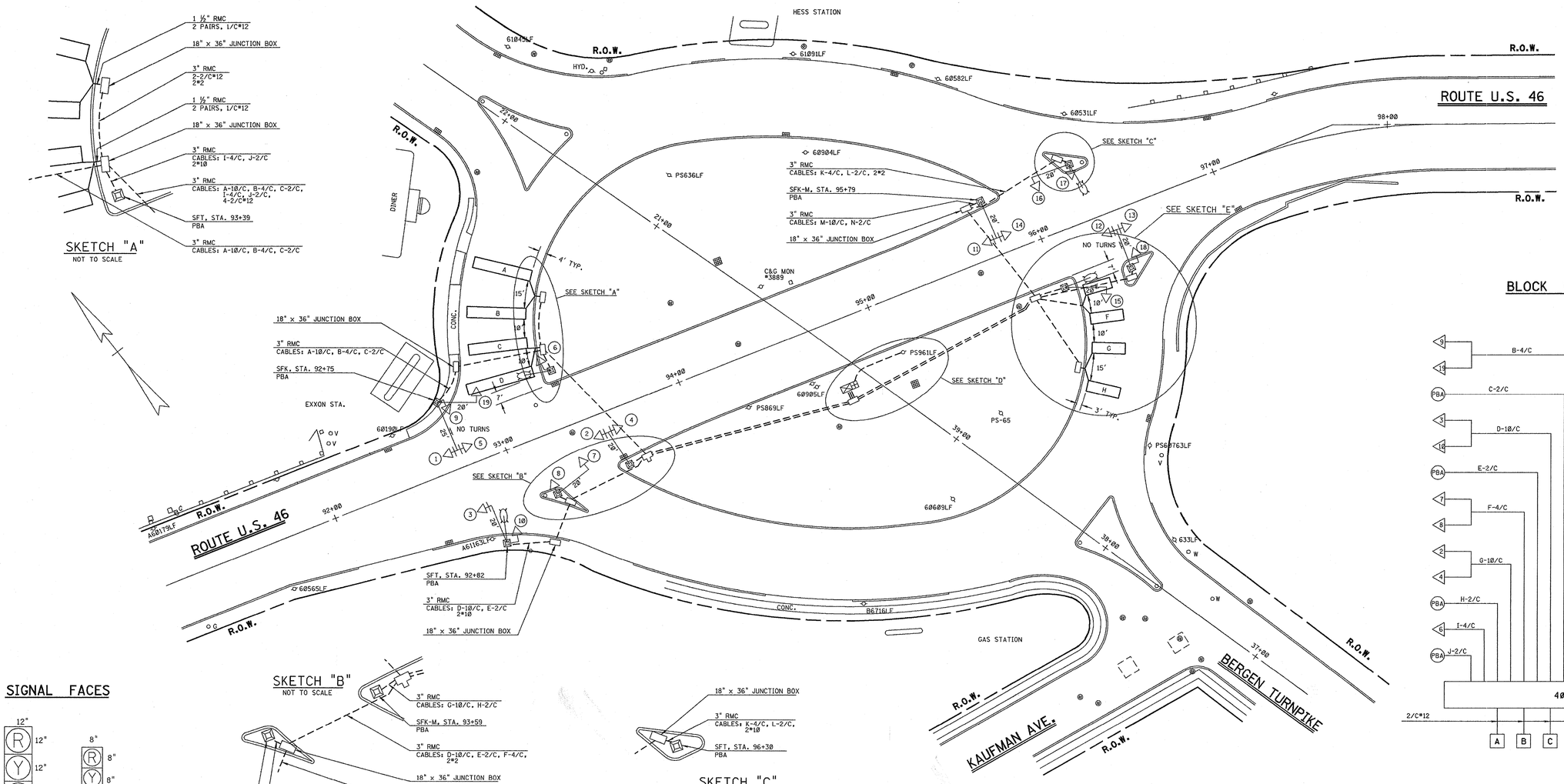

BLOCK WIRING DIAGRAM

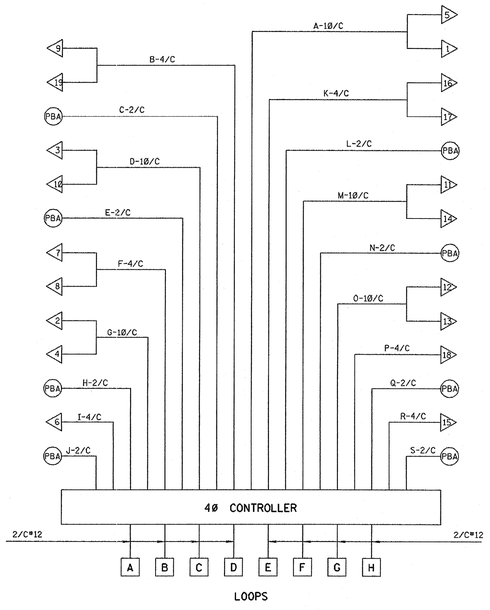

SIGNAL FACES

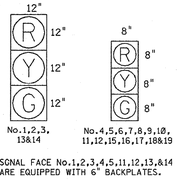

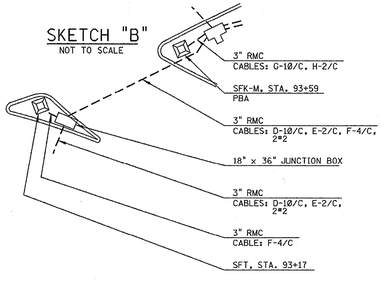

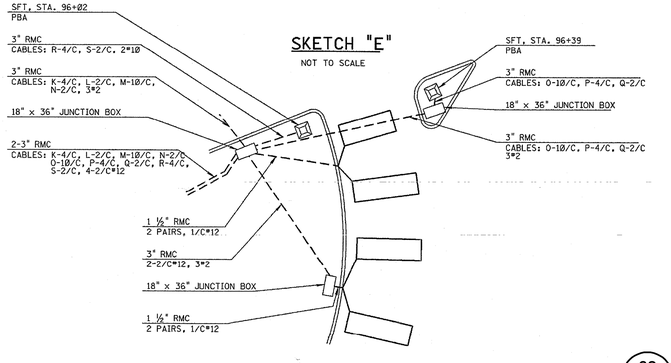

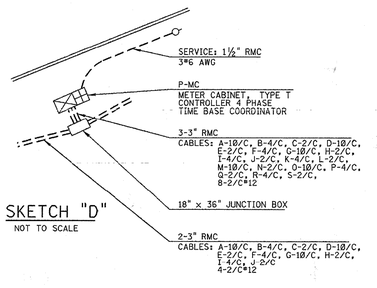

LOOP DETECTOR SCHEDULE

SENSOR NO.	SENSOR CHANNEL	LOOP	MODE	SIZE	TYPE	No. OF TURNS	μh
		A	PRESENCE	32'×6'	FABC		
		B	PRESENCE	32'×6'	FABC		
		C	PRESENCE	32'×6'	FABC		
		D	PRESENCE	37'×6'	FABC		
		E	PRESENCE	15'×6'	FABC		
		F	PRESENCE	18'×6'	FABC		
		G	PRESENCE	18'×6'	FABC		
		H	PRESENCE	18'×6'	FABC		

NUMBER OF TURNS DETERMINED IN THE FIELD.

NO TURNS

MAST ARM SIGN
60" X 12"

30' 20' 10' 0 30' 60'

REGION NO. 1

E-4 / E-6

NEW JERSEY DEPARTMENT OF TRANSPORTATION

ELECTRICAL PLANS

ROUTE 46 SECTION

MUNICIPALITY LITTLE FERRY COUNTY BERGEN

ROUTE 46 & BERGEN TURNPIKE

CONTROL SECTION NO. 0221109

69

ASSUMED MAINTENANCE 5-11-95	M J W	R K	2-27-96
REVISION DESCRIPTION	BY	CHECKED	DATE

NJDOT CADD DATA
ACCOUNT ELECTRICAL
DIRECTORY ebergen
DWG. NAME k:\ebergen\0221109\85.dgn
PLOT DATE 22-NOV-1999 15:02

REFERENCE

FED. ROAD DIV. NO.	FED. AID PROJECT NO.	STATE	FISCAL YEAR	SHEET NO.	TOTAL SHEETS
1	HES-8112(109)	N.J.		16	67

TO BE CONSTRUCTED

ITEM	CONTRACT QUANTITY	AS BUILT QUANTITY
2" RIGID METALLIC CONDUIT TYPE CUG	20 L.F.	19.7
3" RIGID METALLIC CONDUIT TYPE CUG	45 L.F.	[illegible]
3" RIGID METALLIC CONDUIT TYPE CUR	35 L.F.	[illegible]
3" RIGID NON-METALLIC CONDUIT	1,150 L.F.	[illegible]
18"x 36" JUNCTION BOX	1 UNIT	[illegible]
FOUNDATION TYPE JBF	13 UNITS	[illegible]
FOUNDATION TYPE 2M-MC	1 UNIT	[illegible]
METER CABINET TYPE 2M-MC 240/480 V	1 UNIT	[illegible]
LIGHTING STANDARD ASSEMBLY TYPE L-15-S	13 UNITS	[illegible]
LIGHTING ARM ASSEMBLY TYPE L-15A-S	4 UNITS	[illegible]
MULTIPLE LIGHTING WIRE #2 AWG	3,500 L.F.	[illegible]
GROUND WIRE #8 AWG	1,100 L.F.	[illegible]

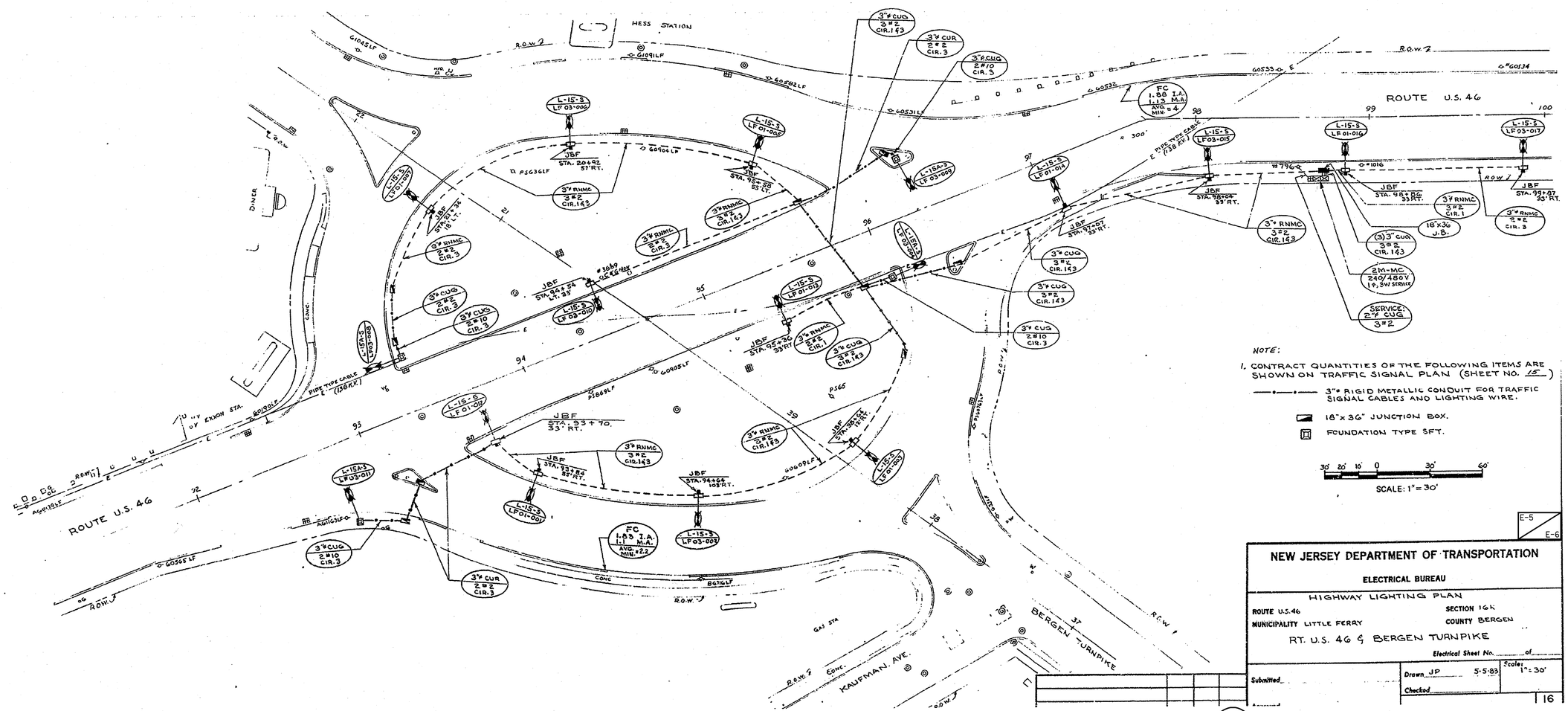

NOTE:

1. CONTRACT QUANTITIES OF THE FOLLOWING ITEMS ARE SHOWN ON TRAFFIC SIGNAL PLAN (SHEET NO. 15)

—•—•— 3"ø RIGID METALLIC CONDUIT FOR TRAFFIC SIGNAL CABLES AND LIGHTING WIRE.

▬ 18"x 36" JUNCTION BOX.

⊠ FOUNDATION TYPE SFT.

SCALE: 1" = 30'

E-5 / E-6

NEW JERSEY DEPARTMENT OF TRANSPORTATION

ELECTRICAL BUREAU

HIGHWAY LIGHTING PLAN

ROUTE U.S.46 SECTION 16K

MUNICIPALITY LITTLE FERRY COUNTY BERGEN

RT. U.S. 46 & BERGEN TURNPIKE

Electrical Sheet No. ____ of ____

Submitted ____ Drawn JP 5-5-83 Checked ____ Scale: 1" = 30'

16

REFERENCE DESIGN SQ. 2 C.S. NO. 0221-302 (STATE) TYPE 93-UP

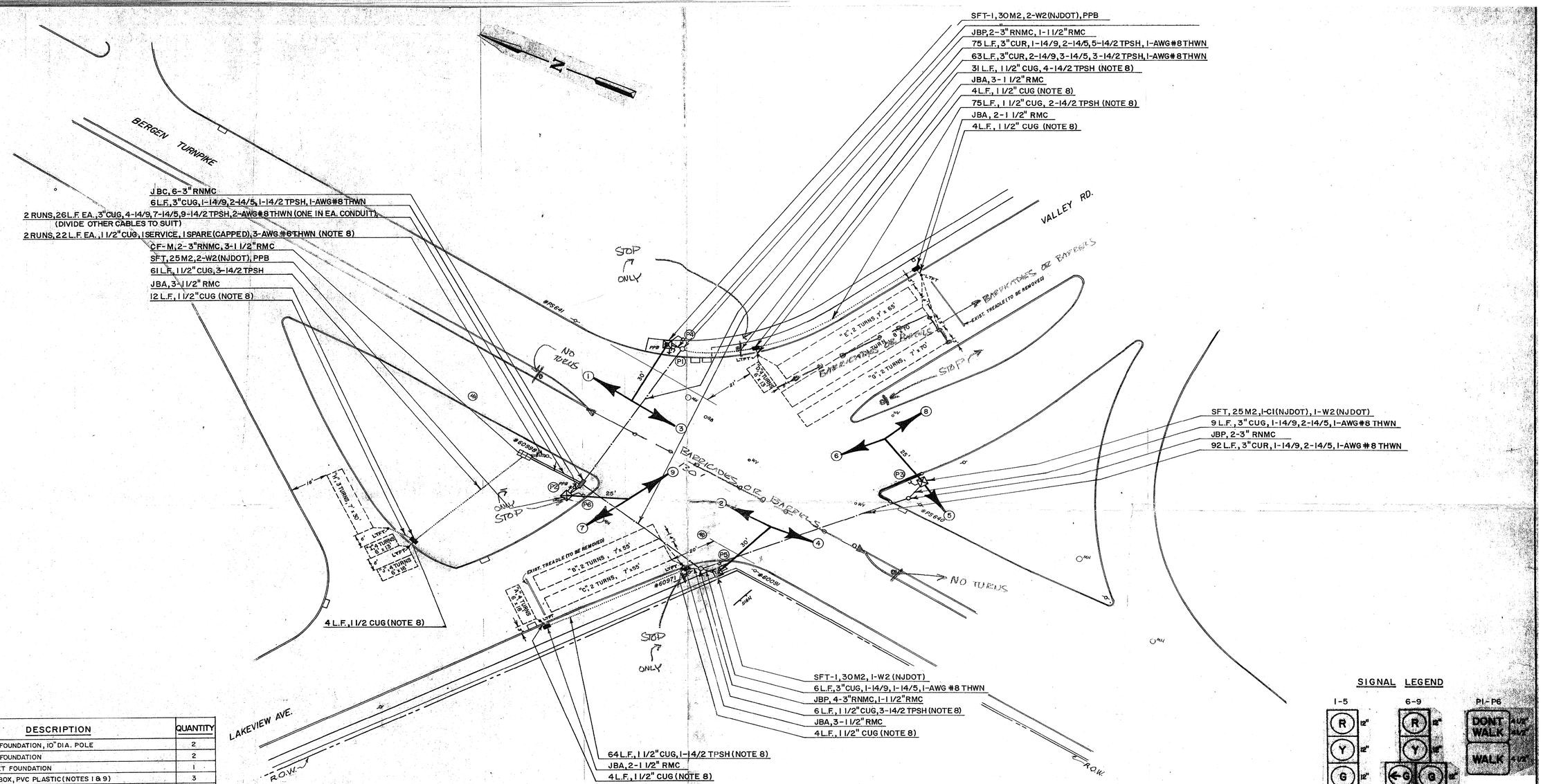

SYMBOL	CODE	DESCRIPTION	QUANTITY
	SFT-1	STANDARD FOUNDATION, 10" DIA. POLE	2
	SFT	STANDARD FOUNDATION	2
	CF-M	"M" CABINET FOUNDATION	1
	JBP	JUNCTION BOX, PVC PLASTIC (NOTES 1 & 9)	3
	JBC	JUNCTION BOX, 18" x 36", CONCRETE	1
	JBA	JUNCTION BOX, ALUMINUM, LOOP LEAD-IN	5
	LTFT	LOOP TERMINATION FEED THRU	6
	25M2	TRAFFIC SIGNAL ASS'Y (NOTE 5)	2
	30M2	TRAFFIC SIGNAL ASS'Y, 10" DIA. POLE (NOTE 5)	2
	CI	TRAFFIC SIGNAL ASSY, CLAMP MOUNTED (NJDOT) (NOTE 6)	1
	W2(NJDOT)	4 1/2" PED. SIGNAL (NJDOT CLAMP) (NOTE 6)	6
	PPB	PEDESTRIAN PUSHBUTTON	2
	3"CUR	3" RNMC, UNDER ROADWAY, SCHED. 40, PVC (NOTES 10, 11 & 12)	250 L.F.
	3"CUG	3" RNMC, UNDER GROUND, SCHED. 40, PVC (NOTES 10 & 12)	90 L.F.
	1 2"CUG	1 1/2" RMC, UNDER GROUND (NOTE 8)	320 L.F.
	14/9	9 CONDUCTOR SIGNAL CABLE (NOTE 4)	700 L.F.
	14/5	5 CONDUCTOR SIGNAL CABLE (NOTE 4)	750 L.F.
	14/2TPSH	PPB & LOOP LEAD-IN WIRE (NOTE 3)	1100 L.F.
	"A"-"J"	AWG #14 LOOP WIRE (NOTE 2)	2500 L.F.
	THWN	AWG #8 BONDING WIRE, STRANDED	330 L.F.
	THWN	AWG #6 SERVICE WIRE, STRANDED	130 L.F.

SIGNAL LEGEND

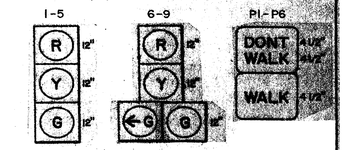

NOTES:

1.) JUNCTION BOXES TO BE INSTALLED FLUSH WITH CONCRETE SURFACE.
2.) LOOP WIRE SHALL CONFORM TO IMSA SPEC. # 51-5-1984.
3.) LOOP LEAD-IN & PED. PUSHBUTTON CABLE (14/2TPSH), SHALL CONFORM TO IMSA #50-2-1984.
4.) JACKETED SIGNAL CABLE, (14/5), SHALL CONFORM TO IMSA SPEC. # 19-1-1984.
5.) OTR SIGNAL HEIGHT TO BE MAINTAINED AT 15'6".
6.) W/DW SIGNAL HEIGHT TO BE CLAMPED AT 8'6", VEHICLE SIGNALS AT 12' HEIGHT.
7.) CONTRACTOR(S) MAY ALTER JB & CONDUIT PLACEMENTS IF THERE IS UNDERGROUND INTERFERENCE.
8.) SERVICE/SPARE & LTFT CONDUITS TO BE 1 1/2" RMC, GALVANIZED.
9.) JUNCTION BOXES MAY HAVE 3/4" × 10' GROUND RODS INSTALLED AT THE ENGINEER'S DISCRETION.
10.) ALL RUNS OF 3" RNMC SHALL BE FURNISHED WITH AN AWG #8 THWN BONDING WIRE, COLORED OR TAPED GREEN, CONNECTED TO ALL GROUNDING POINTS FROM THE SERVICE GROUND OUTWARD.
11.) RNMC INSTALLED IN TRAFFIC LOAD BEARING AREAS SHALL BE INSTALLED IN ACCORDANCE WITH 1984 NEC ARTICLE #347-2(G), OR AS STATED IN THE SPECIFICATIONS.
12.) SCHED. #40 PVC CONDUIT SHALL CONFORM TO NEMA TC-2, FED. SPEC. WC-1094A & UL STANDARD #651
13.) POLE TO BE 10" DIA. TAPERING TO 8" DIA.
14.) THESE POLES TO USE EXISTING ISLAND FOUNDATIONS, CONDUITS, AND JUNCTION BOX.
15.) CONTRACTOR TO STUDY UTILITIES PLAN & CALL FOR ALL APPROPRIATE MARKOUTS PRIOR TO ANY TRENCHING.

71

E-6
E-6

ENGINEERING DIVISION, D.P.W.
BERGEN COUNTY, NEW JERSEY

EDWARD R. RANUSKA, P.E.
COUNTY ENGINEER N.J. LIC. No. 14215

SIGNED Edward R. Ranuska DATE 6/6/87

TRAFFIC SIGNAL PLAN
BERGEN TURNPIKE & LAKEVIEW AVENUE
BOROUGH OF LITTLE FERRY

DR. T.B. CH. G.S. DATE 6-1987 SCALE 1" = 20'
JOB No. C30-7 DWG No. 3 OF 10

NOTES 1) WHERE THE USE OF RNMC IS SET FORTH ON THE PLANS, THE DEBURRED OR BELL MOUTHED CONDUIT END SHALL ALSO PROTRUDE 2 1/2" ABOVE THE FOUNDATION TOP.

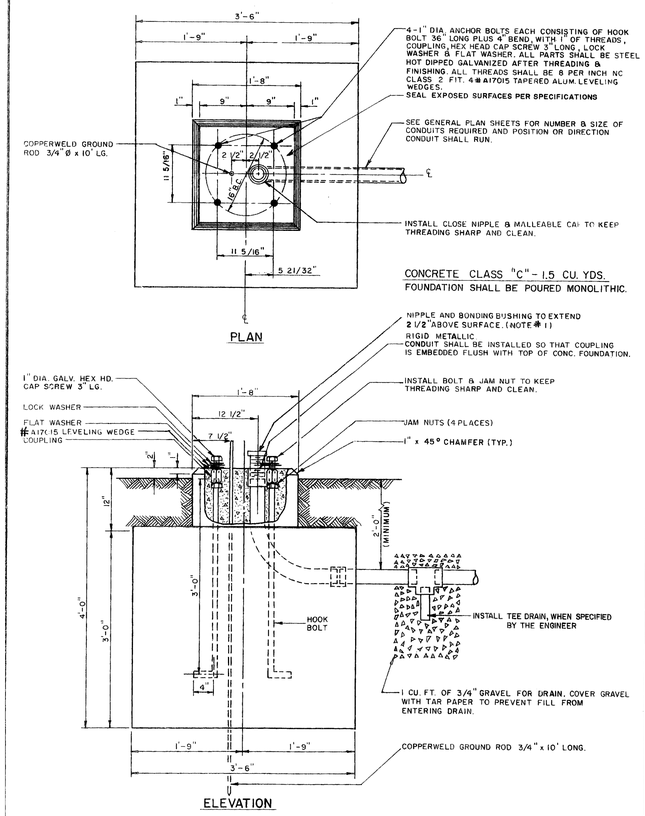

CONCRETE CLASS "C" - 1.5 CU. YDS.
FOUNDATION SHALL BE POURED MONOLITHIC.

PLAN

ELEVATION

CODE CLASS "SFTBC" - TRAFFIC SIGNAL POLE FOUNDATION, 8" DIA. POLE

NOT TO SCALE

NOTE:
DIMENSION "A" SHALL BE 5'-7" UNLESS OTHERWISE DIRECTED BY THE ENGINEER.

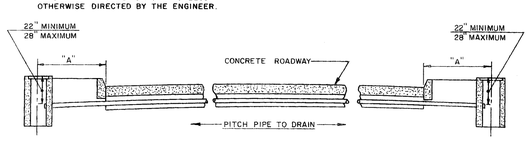

CONDUIT INSTALLED IN SUB-BASE - CONCRETE ROAD

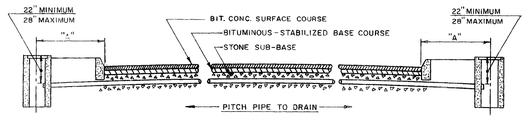

CONDUIT INSTALLED IN SUB-BASE - ASPHALT ROAD

TYPICAL CROSS SECTIONS SHOWING CONDUIT AND JUNCTION BOX INSTALLATION

NOT TO SCALE

2T

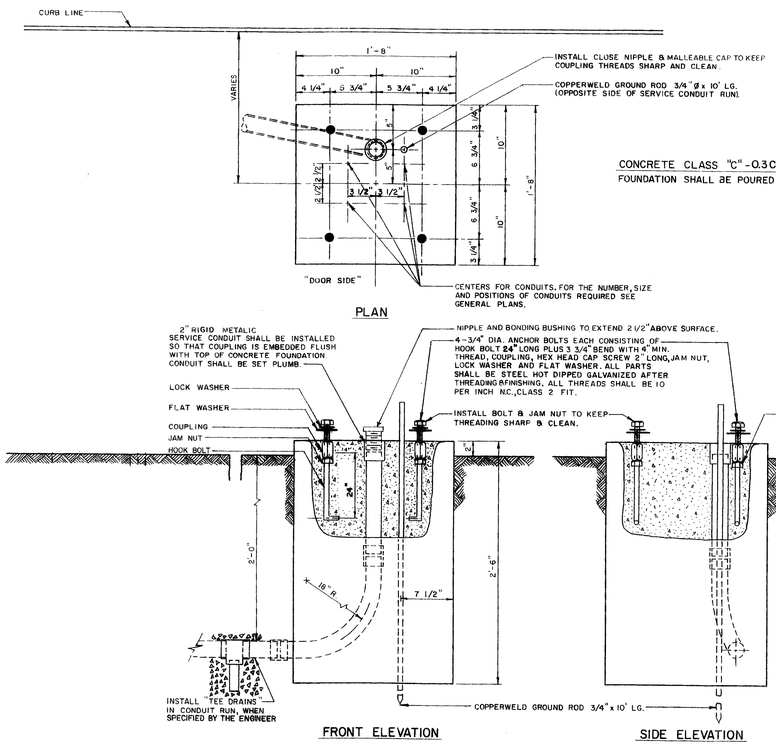

CONCRETE CLASS "C" - 0.3 C.Y. (7 C.F.)
FOUNDATION SHALL BE POURED MONOLITHIC

PLAN

FRONT ELEVATION

SIDE ELEVATION

METER CABINET FOUNDATION - CODE CLASS "MCF"

NOT TO SCALE

NOTE:
THIS JUNCTION BOX TO BE CONSTRUCTED OF MODIFIED POLYETHYLENE AND SHALL HAVE A VERTICAL CRUSH RATING OF 20000# AN APPROVED BOX OF THIS TYPE IS MFD. BY MID-STATES PLASTICS, INC. MT. STERLING, KY.

(GEN'L NOTE #2)

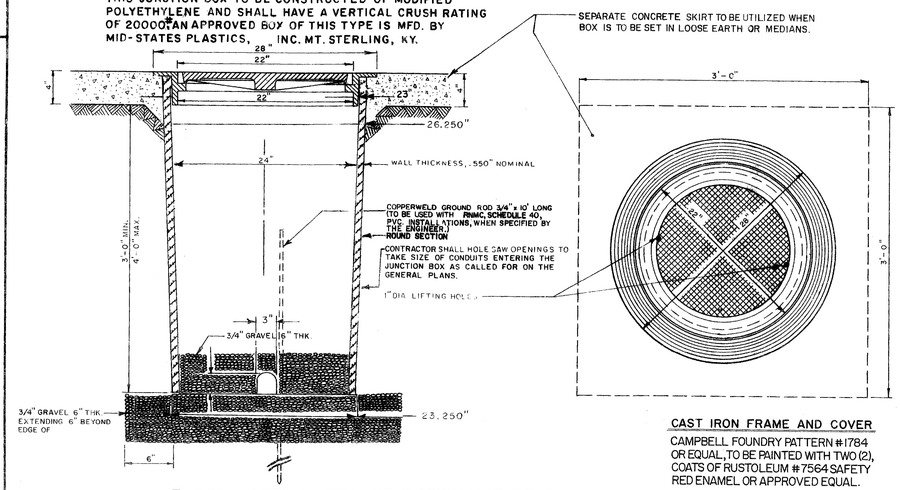

CAST IRON FRAME AND COVER

CAMPBELL FOUNDRY PATTERN #1784 OR EQUAL, TO BE PAINTED WITH TWO (2), COATS OF RUSTOLEUM #7564 SAFETY RED ENAMEL OR APPROVED EQUAL.

TYPICAL INSTALLATION OF SIDEWALK TYPE ROUND CAST IRON FRAME AND COVER FOR 24" I.D. JUNCTION BOX

CODE CLASS "JBP" NOT TO SCALE

2T

NOTES 1) WHERE THE USE OF RNMC IS SET FORTH ON THE PLANS, THE DEBURRED OR BELL MOUTHED CONDUIT END SHALL ALSO PROTRUDE 2 1/2" ABOVE THE FOUNDATION TOP.

2) CONDUIT(S) & GROUND ROD TO BE LOCATED WITHIN 11" DIA. CIRCLE, CENTERED ON RISER.

CONCRETE CLASS "C" - 0.22 C.Y. (6 C.F.)
FOUNDATION SHALL BE POURED MONOLITHIC

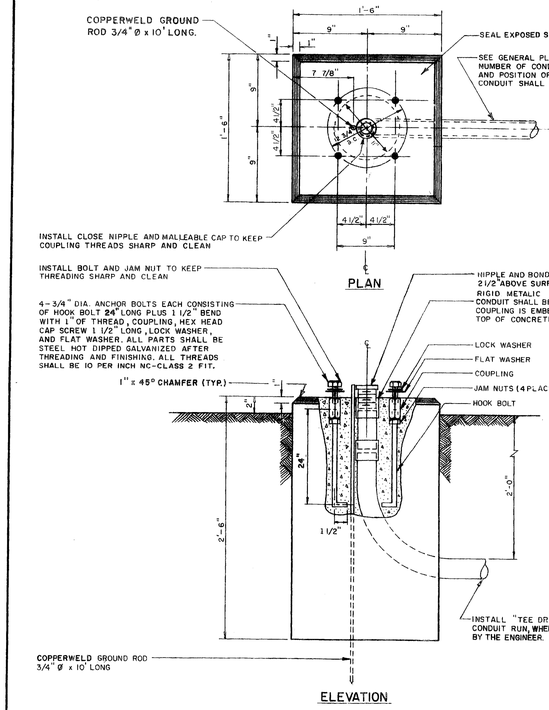

PLAN

ELEVATION

PEDESTAL FOUNDATION - CODE CLASS "TBJ-F"

NOT TO SCALE

NOTE: MULTIPLE CONDUIT IN ROADWAY TO BE PLACED HORIZONTALLY IN TRENCH TO ALLOW FOR MAXIMUM COVER.

ROADWAY & TRENCH REPLACEMENT

NOT TO SCALE

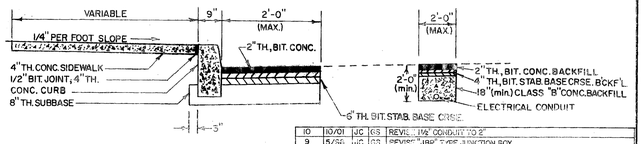

12	10/04	JC	GS	CHANGE PAINT NOTATION
11	9/04	JC	GS	ADD GENERAL NOTE # 2

1)

GENERAL NOTES

BACKFILL OF DENSE GRADED AGGREGATE COMPACTED TO 95% OF MAXIMUM DENSITY SHALL BE USED TO REPLACE ALL DISTURBED SOIL AROUND ALL FOUNDATIONS AND BOXES, DOWN TO UNDISTURBED SOIL WITHIN THE TRAFFIC SIGNAL INSTALLATION AREA. BACKFILL SHALL NOT BE A SEPARATE PAY ITEM, BUT SHALL BE INCLUDED IN THE LUMP SUM PRICE FOR TRAFFIC SIGNAL INSTALLATION.

2) AN ALTERNATIVE TO THIS JUNCTION BOX MAY BE 24" I.D., ANNULAR, HDPE PIPE SECTIONS IN CONFORMANCE WITH AASHTO M294-TYPE 'S' REQUIREMENTS. A SUITABLE PIPE OF THIS TYPE IS DESCRIBED AS "HI-Q" AND IS MFD. BY HANCOR INC., FINDLAY, OHIO.

72

REV.	DATE	BY	CH.	DESCRIPTION
10	10/01	JC	GS	REVISE "1 1/2" CONDUIT TO 2"
9	5/96	JC	GS	REVISE "JBP" TYPE 3 JUNCTION BOX
8	4/94	RM	GS	REV. ANCHOR BOLTS (METER CB & PED. FOUNDATIONS).
7	5/93	RM	GS	REV. B.C. ON TRAFFIC SIGNAL POLE FDN. PLAN & NOMEN.
6	8/92	FP	GS	ADDED REF. TO # A17015 ALUM. LEVELING WEDGE
5	5/90	FP	GS	REVISED METER CABINET FOUNDATION
4	7/87	FP	GS	ADD NOTE # 1 & ADD NIPPLE TO TBJ-F, MCF, SFT.
3	4/87	TB	GS	REVISE NOTE OF JBP, CHANGE "JBT-S" TO JBP
2	12/86	FP	GS	PEDESTAL FOUNDATION-CHANGE CODE CLASS "SPF" TO "TBJ-F"
1	12/86	TB	GS	ADD TRENCH REPLACEMENT, "T" DRAIN, REMOVE "PB" MOUNTED ON "FDN"

ENGINEERING DIVISION, D.P.W.
BERGEN COUNTY, NEW JERSEY

EDWARD R. RANUSKA, P.E.
COUNTY ENGINEER N.J. LIC. NO. 14215
DATE 1/5/83 SIGNED Edward R. Ranuska

TRAFFIC SIGNAL INSTALLATION
TYPICAL DETAILS
FOUNDATIONS, JUNCTION BOX,
TRENCH REPLACEMENT

DR. BY TMN CHK. BY _____ DATE _____
JOB NO. _____ SCALE _____ DWG. NO. _____ OF _____

NOTE:

1). WHERE THE USE OF RNMC IS SET FORTH ON THE PLANS, THE DEBURRED OR BELL MOUTHED CONDUIT END SHALL ALSO PROTRUDE 2 1/2" ABOVE THE FOUNDATION.

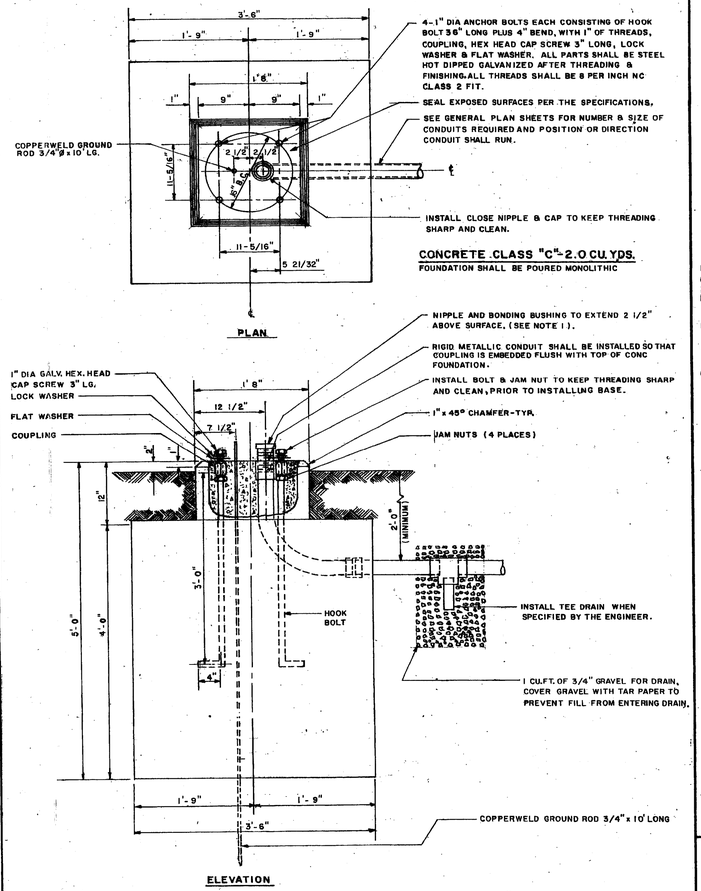

CODE CLASS "SFTBC-1", TRAFFIC SIGNAL POLE FOUNDATION, 10" DIA. POLE

NOT TO SCALE

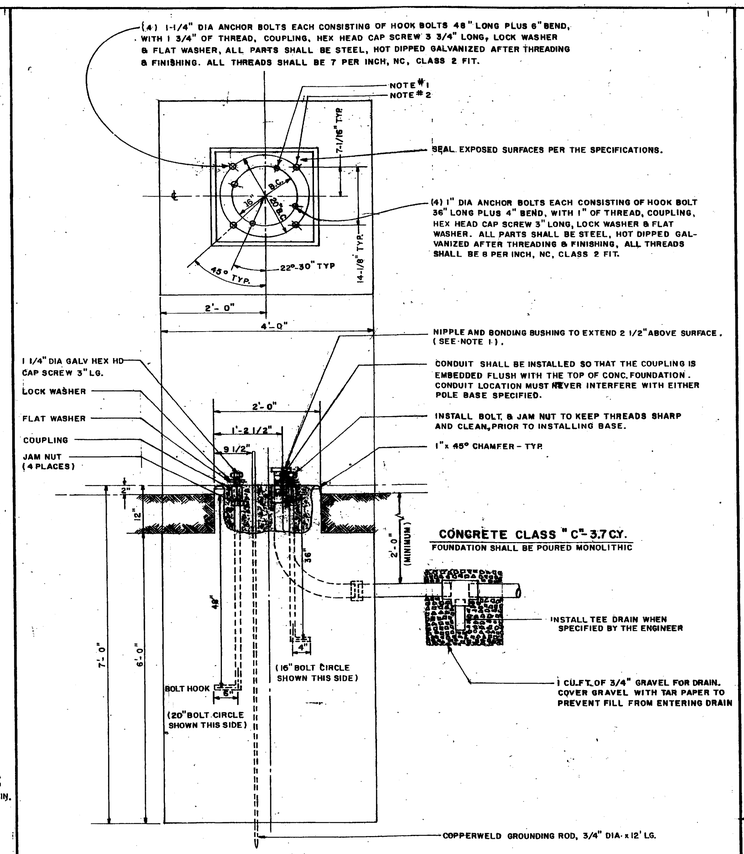

CODE CLASS "SFTBC-2", TRAFFIC SIGNAL POLE FOUNDATION, 12" DIA. POLE

NOT TO SCALE

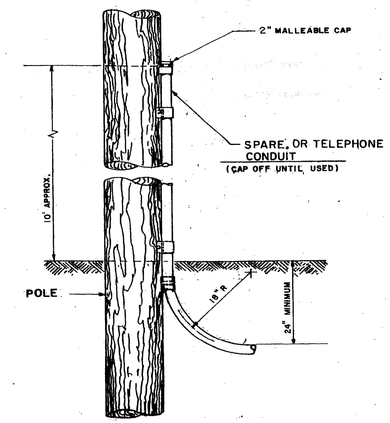

NOTE:

QUADRANT MARKOUT FOR CONDUIT PLACEMENT TO BE FURNISHED BY APPROPRIATE UTILITY

SPARE OR TELEPHONE CONDUIT CONNECTION

NOT TO SCALE

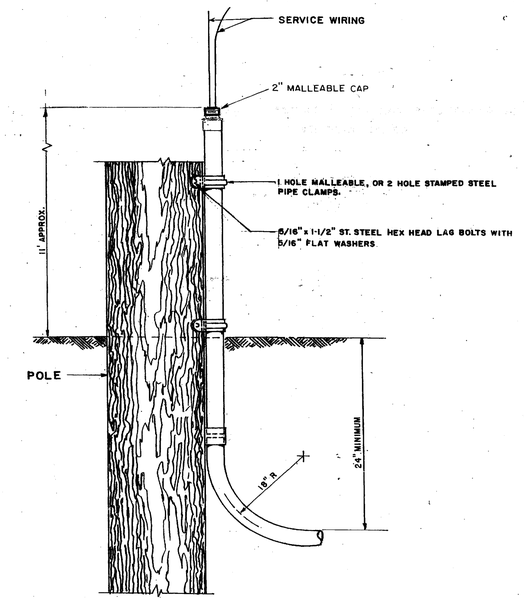

UTILITY SERVICE CONNECTION

NOT TO SCALE

NOTES:

1) "UNUSED" 1" COUPLING TO BE FILLED WITH NON-HARDENING GREASE, OR HOLE TO BE COVERED WITH A CAPLUG # BP 7/8 PUSH-IN PLASTIC PLUG OR EQUAL.

2) "UNUSED" 1 1/4" COUPLING TO BE FILLED WITH NON-HARDENING GREASE, OR HOLE TO BE COVERED WITH A CAPLUG # BP 1 1/8 PUSH-IN PLASTIC PLUG OR EQUAL.

3) SPARE CONDUIT MAY BE CAPPED OFF AT OR BELOW GRADE AT THE ENGINEER'S DISCRETION. IF CONDUIT IS CAPPED BELOW GRADE, AN "AS BUILT" IS TO BE FURNISHED INDICATING LOCATION OF SAME.

4) 1½" SERVICE ENTRANCE SWEEP TO ENTER FOUNDATION FROM LEFT REAR OF FOUNDATION, OPPOSITE CABINET DOOR HINGE - (SEE SHEET 1T).

NOTES CONT'D

5) BACKFILL OF DENSE GRADED AGGREGATE COMPACTED TO 95% OF MAXIMUM DENSITY SHALL BE USED TO REPLACE ALL DISTURBED SOIL AROUND ALL FOUNDATIONS AND BOXES DOWN TO UNDISTURBED SOIL WITHIN THE TRAFFIC SIGNAL INSTALLATION AREA. BACKFILL SHALL NOT BE A SEPARATE PAY ITEM, BUT SHALL BE INCLUDED IN THE LUMP SUM PRICE FOR TRAFFIC SIGNAL INSTALLATION.

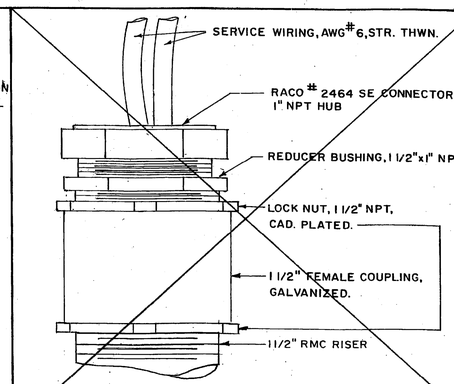

DETAIL - SERVICE WIRE FITTING

NOT TO SCALE

DETAIL-CONTROLLER CABINET SERVICE ENTRANCE

N.T.S.

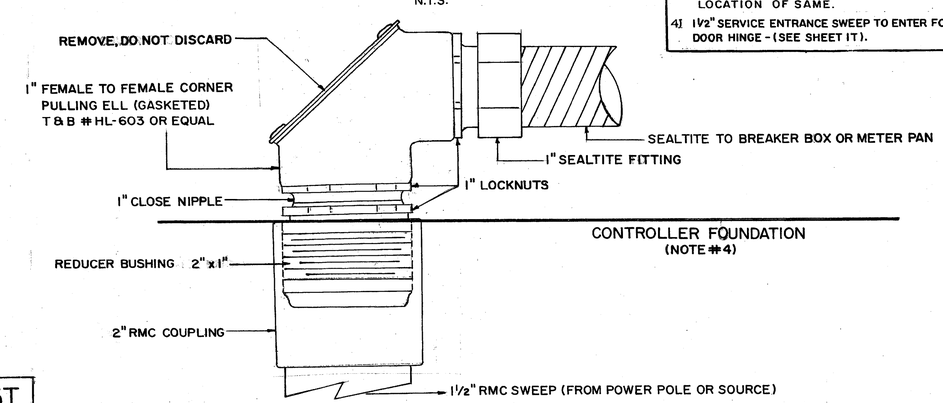

TEE DRAIN (N.T.S.)

INSTALLED IF AND WHERE DIRECTED BY THE ENGINEER

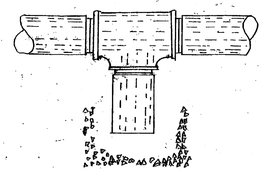

NOTE: SIZE & TYPE OF MATERIAL TO BE USED FOR "T" DRAIN & CONDUIT ARE LISTED IN THE PROJECT SPECIFICATIONS.

REV.	DATE	BY	CH.	DESCRIPTION
7	10/01	J.C.	G.S.	REV. 1½" CONDUIT TO 2"
6	4/00	J.C.	G.S.	REVISE CONTROLER CABINET ENTRANCE
5	5/98	F.P.	G.S.	ADD NOTE #5 & TEE DRAIN
4	4/98	V.M.	G.S.	REVISE NOTE #4, ADD NOTE TO COND. CONN.
3	6/97	F.P.	G.S.	ADD NOTE #4
2	12/93	F.P.	G.S.	ADD DETAIL-CONTROLLER CABINET ENTRANCE
1	5/93	RM	GS	REV. B.C. ON TR. SIG. POLE FDN. PLAN & NOMEN. -

ENGINEERING DIVISION, D.P.W.
BERGEN COUNTY, NEW JERSEY

EDWARD R. RANUSKA, P.E.
COUNTY ENGINEER N.J. LIC. No. 14215
SIGNED Edward R. Ranuska DATE 11/18/87

SIGNAL POLE FOUNDATIONS
CLASS "SFTBC-1", "SFTBC-2"
UTILITY SERVICE CONNECTIONS

DR. V.M. CH. G.S. DATE _____ SCALE: AS SHOWN
JOB No. _____ DWG No. ___ OF ___

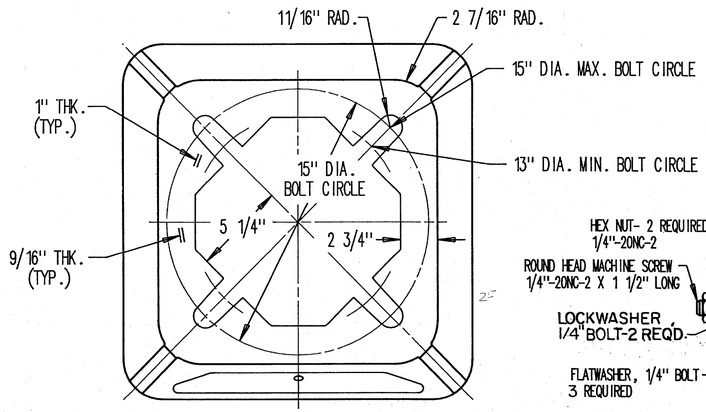

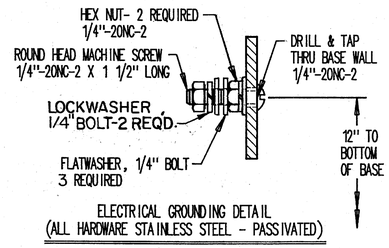

ELECTRICAL GROUNDING DETAIL
(ALL HARDWARE STAINLESS STEEL - PASSIVATED)

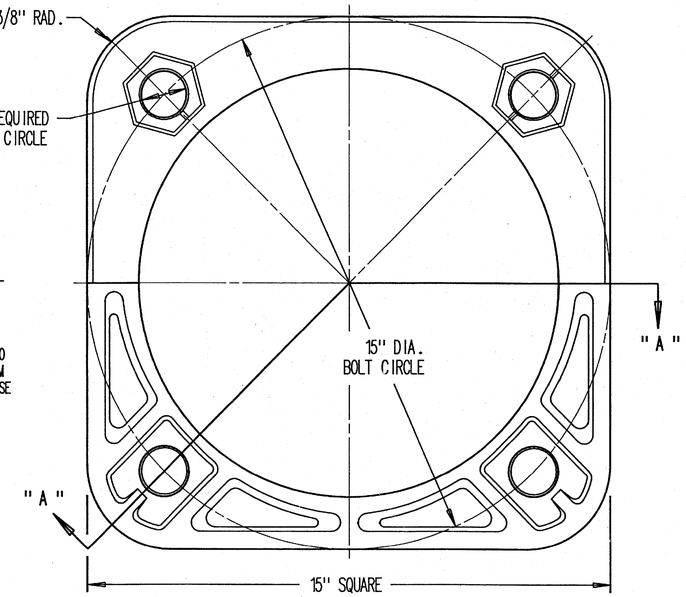

12" SHOE BASE DETAIL

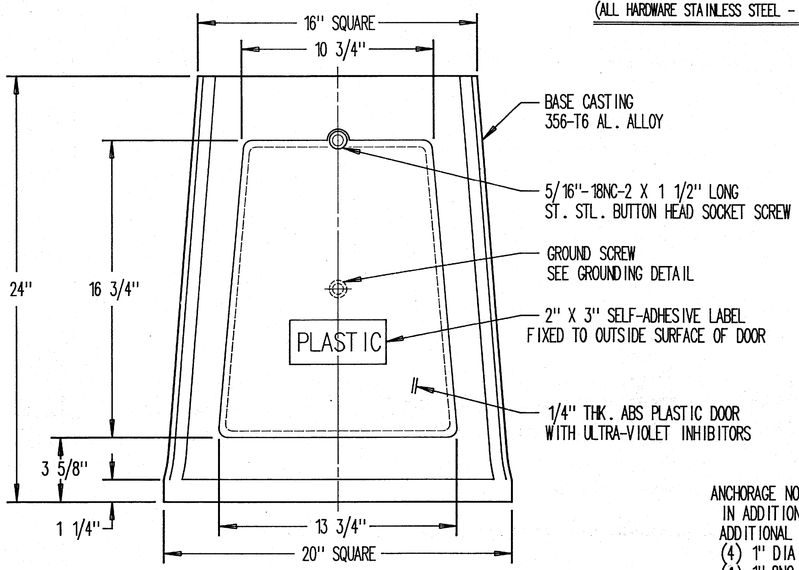

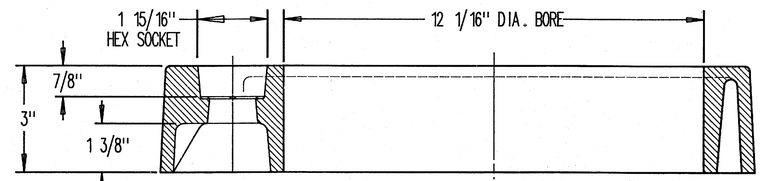

SECTION "A - A"

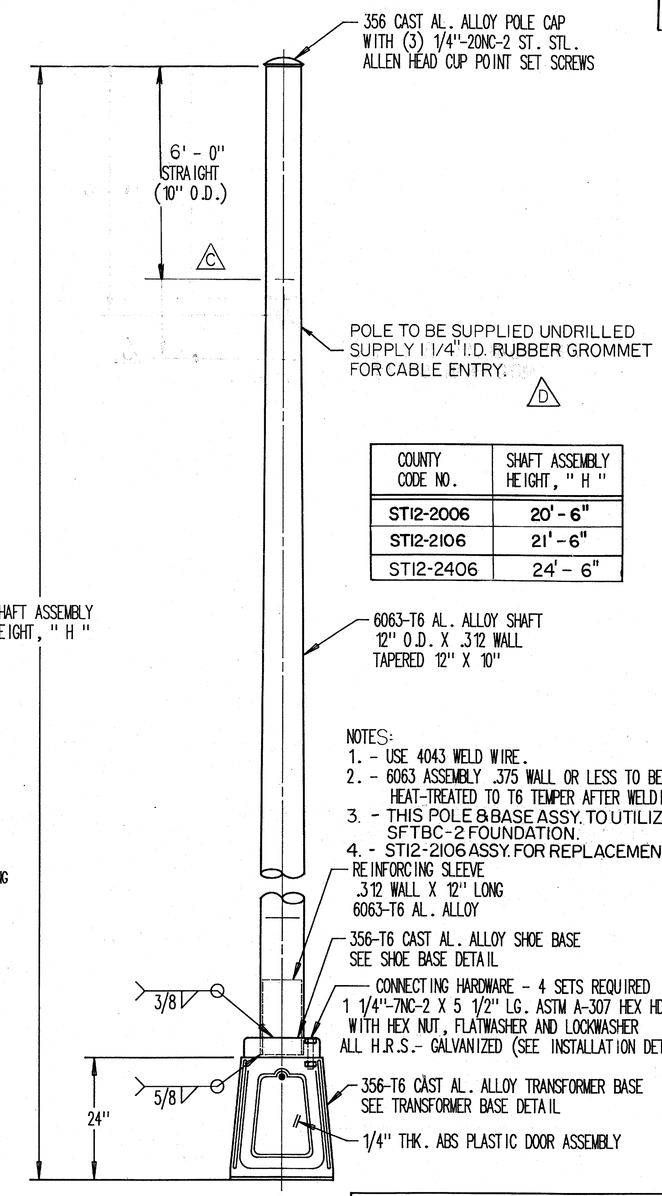

COUNTY CODE NO.	SHAFT ASSEMBLY HEIGHT, "H"
ST12-2006	20'-6"
ST12-2106	21'-6"
ST12-2406	24'-6"

NOTES:
1. - USE 4043 WELD WIRE.
2. - 6063 ASSEMBLY .375 WALL OR LESS TO BE HEAT-TREATED TO T6 TEMPER AFTER WELDING.
3. - THIS POLE & BASE ASSY. TO UTILIZE SFTBC-2 FOUNDATION.
4. - ST12-2106 ASSY. FOR REPLACEMENT ONLY.

BOTTOM OF BASE TO BE COATED WITH BITUMINOUS PAINT

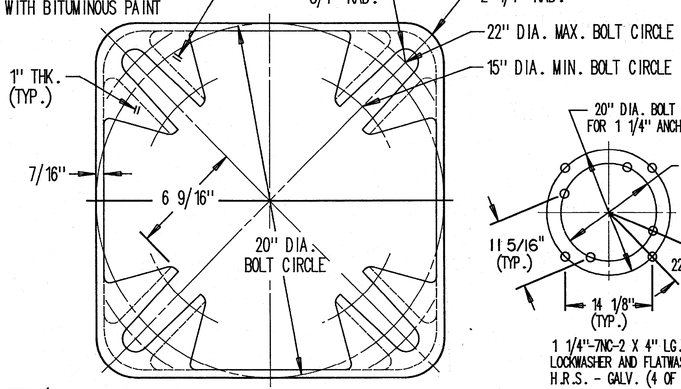

ANCHORAGE NOTE:
IN ADDITION TO TO STANDARD ANCHORAGE AS SHOWN THE FOLLOWING ADDITIONAL ANCHORAGE SHALL ALSO BE SUPPLIED:
(4) 1" DIA. X 40" LONG ANCHOR RODS - H.R.S. GALV.
(4) 1"-8NC-2 HEX NUTS - H.R.S. GALV.
(4) 1"-8NC-2 X 3" LONG HEX COUPLINGS - H.R.S. GALV.
(4) 1"-8NC-2 X 3 1/2" HEX HEAD BOLTS - H.R.S. GALV.
(4) 1" STANDARD LOCKWASHERS - H.R.S. GALV.
(4) 1" STANDARD FLATWASHERS - H.R.S. GALV.
(4) CAPLUGS FOR 1"-8NC-2 THREADS - PLASTIC

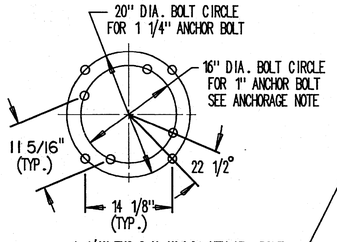

1 1/4"-7NC-2 X 4" LG. HEX HD. BOLT, LOCKWASHER AND FLATWASHER - H.R.S. - GALV. (4 OF EACH REQUIRED)

FOUNDATION ANCHORAGE DETAIL

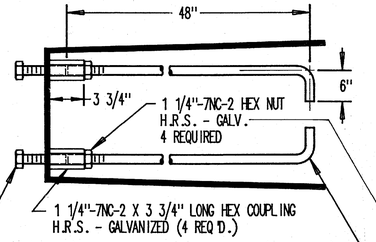

1 1/4"-7NC-2 X 3 3/4" LONG HEX COUPLING H.R.S. - GALVANIZED (4 REQ'D.)

1 1/4" DIA. X 54" LONG ANCHOR ROD (4 REQUIRED). ANCHOR ROD PER ASTM A576 STEEL WITH 55,000 PSI YIELD STRENGTH. TOP 18" OF ROD TO BE GALVANIZED PER ASTM A153.

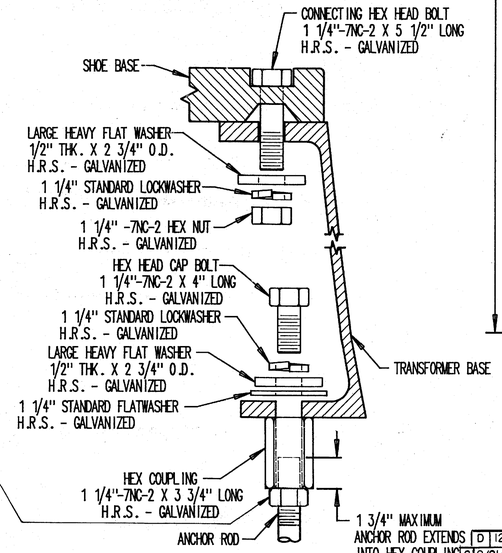

TRANSFORMER BASE HARDWARE INSTALLATION

74

REV	DATE	BY	CH	DESCRIPTION
D	12-5-97	GRC	GHS	DELETE CABLE ENTRY HOLE
C	8/21/95	GHS	GHS	ADDED 12" ADD'L STRAIGHT SECTION
B	2/17/94	GHS	GHS	NOTE 4, ADDED REPL. POLE/BASE ASSY.
A	1/27/94	GHS	GHS	NOTE 3, ADDED FOUND. REFERENCE

ENGINEERING DIVISION, D.P.W.
BERGEN COUNTY, NEW JERSEY

EDWARD R. RANUSKA, P.E.
COUNTY ENGINEER N.J. LIC. NO. 14215
DATE 1/31/94 SIGNED Edward R. Ranuska

TRAFFIC SIGNAL SUPPORT
12" DIA. POLE ASSEMBLY
STANDARD

DR. BY GHS CHK. BY GHS DATE 1-28-94
JOB NO. ____ DWG. NO. ____ OF ____

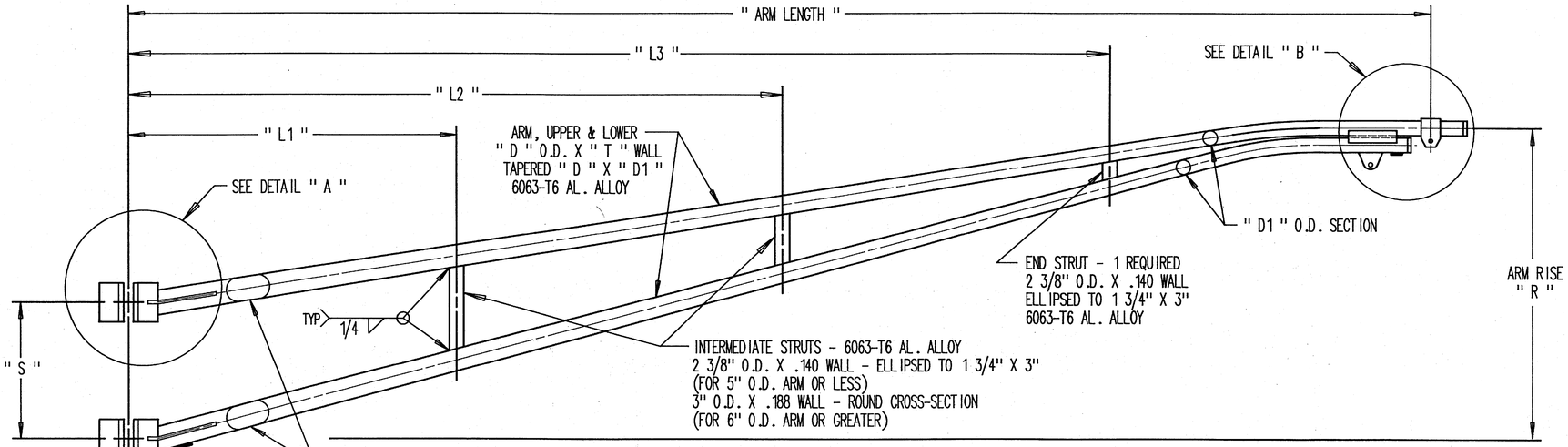

NOTE:
1. - USE 4043 WELD WIRE.
2. - 6063 ASSEMBLY .375 WALL OR LESS TO BE HEAT-TREATED TO T6 TEMPER AFTER WELDING.

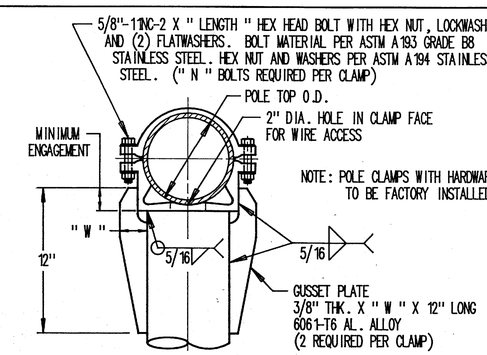

DETAIL " A "

ARM LENGTH	POLE TOP O.D.	MINIMUM ENGAGEMENT	PLATE WIDTH " W "	NO. OF BOLTS " N "	BOLT LENGTH
15' - 0"	6 5/8"	2"	2"	4	3 1/2"
16' - 0"	6 5/8"	2"	2"	4	3 1/2"
20' - 0"	6 5/8"	2"	2"	4	3 1/2"
20' - 0"	8"	2 1/2"	3"	4	3 1/2"
25' - 0"	6 5/8"	2"	2"	4	3 1/2"
25' - 0"	8"	2 1/2"	3"	4	3 1/2"
25' - 0"	10"	2 1/2"	3"	6	3 1/2"
30' - 0"	8"	2 1/2"	2 1/2"	6	6"
30' - 0"	10"	2 1/2"	2 1/2"	6	6"

MAST ARM ASSEMBLY DATA SUMMARY CHART

COUNTY CODE NO.	ARM LENGTH	MAST ARM SIZE " D " X " T"	MAST ARM TAPER " D " X " D1 "	ARM ELLIPSE " E1 " X " E2 "	" S "	" L1 "	" L2 "	" L3 "	ARM RISE " R "	POLE TOP O.D.	USED ON POLE
MA15-08	15'-0"	5" X .125 WALL	5" X 2 3/8"	6 3/8" X 3"	30"	4' - 7"	——	9' - 2"	5' - 9"	6 5/8"	ST08-1800
MA16-08	16'-0"	5" X .125 WALL	5" X 2 3/8"	6 3/8" X 3"	30"	4' - 7"	——	9' - 2"	5' - 9"	6 5/8"	ST08-1800
MA20-08	20'-0"	5" X .125 WALL	5" X 2 3/8"	6 3/8" X 3"	30"	4' - 7'	9' - 2"	13' - 9"	5' - 9"	6 5/8"	ST08-1800
MA25-08	25'-0"	5" X .156 WALL	5" X 2 3/8"	6 3/8" X 3"	30"	6' - 9"	13' - 2"	18' - 4"	5' - 9"	6 5/8"	ST08-1800

COUNTY CODE NO.	ARM LENGTH	MAST ARM SIZE " D " X " T"	MAST ARM TAPER " D " X " D1 "	ARM ELLIPSE " E1 " X " E2 "	" S "	" L1 "	" L2 "	" L3 "	ARM RISE " R "	POLE TOP O.D.	USED ON POLE
MA20-10	20'-0"	5" X .188 WALL	5" X 2 3/8"	6 3/4" X 2 1/2"	30"	4' - 7"	9' - 2"	13' - 9"	5' - 9"	8"	ST10-1906
MA25-10	25'-0"	5" X .188 WALL	5" X 2 3/8"	6 3/4" X 2 1/2"	30"	6' - 9"	13' - 2"	18' - 4"	5' - 9"	8"	ST10-1906
MA30-10	30'-0"	6" X .188 WALL	6" X 2 7/8"	7 5/8" X 3 1/2"	42"	7' - 0"	14' - 0"	21' - 0"	6' - 9"	8"	ST10-1906

COUNTY CODE NO.	ARM LENGTH	MAST ARM SIZE " D " X " T"	MAST ARM TAPER " D " X " D1 "	ARM ELLIPSE " E1 " X " E2 "	" S "	" L1 "	" L2 "	" L3 "	ARM RISE " R "	POLE TOP O.D.	USED ON POLE
MA25-12	25'-0"	6" X .188 WALL	6" X 2 7/8"	7 5/8" X 3 1/2"	30"	6' - 9"	13' - 2"	18' - 4"	5' - 9"	10"	ST12-2006
MA30-12	30'-0"	7" X .188 WALL	7" X 3 1/2"	9 1/4" X 3 3/4"	42"	7' - 0"	14' - 0"	21' - 0"	6' - 9"	10"	ST12-2006

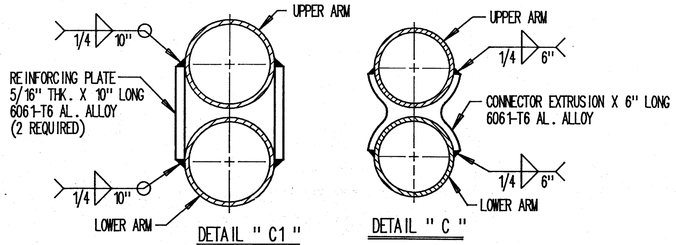

DETAIL " C1 " DETAIL " C "

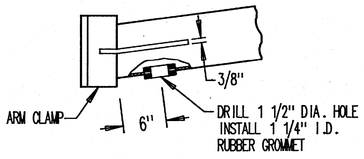

DETAIL " D "

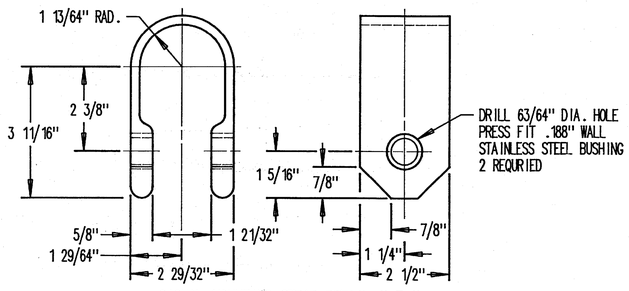

SIGNAL MOUNTING STRAP DETAIL " E "

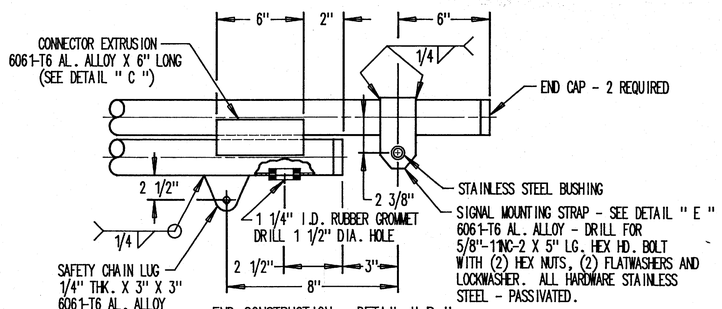

END CONSTRUCTION - DETAIL " B "
(FOR 5" O.D. ARMS)

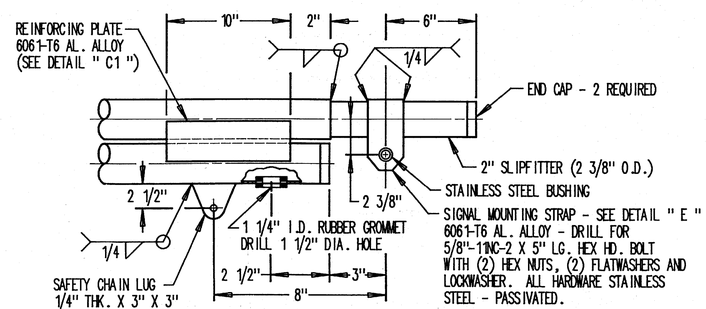

END CONSTRUCTION - DETAIL " B "
(FOR 6" O.D. & 7" O.D. ARMS)

ENGINEERING DIVISION, D.P.W.
BERGEN COUNTY, NEW JERSEY

EDWARD R. RANUSKA, P.E.
COUNTY ENGINEER N.J. LIC. NO. 14215
DATE 1/31/94 SIGNED Edward R. Ranuska

TRAFFIC SIGNAL SUPPORT
MAST ARM ASSEMBLY STANDARDS

DR. BY GHS CHK. BY GHS DATE 1-28-94
JOB NO. ____ DWG. NO. ____ OF ____

75

REV	DATE	BY	CH	DESCRIPTION

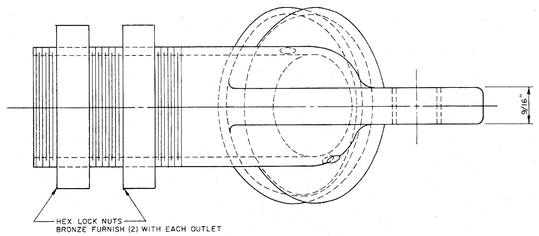

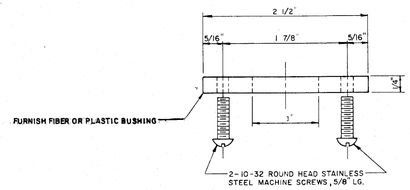

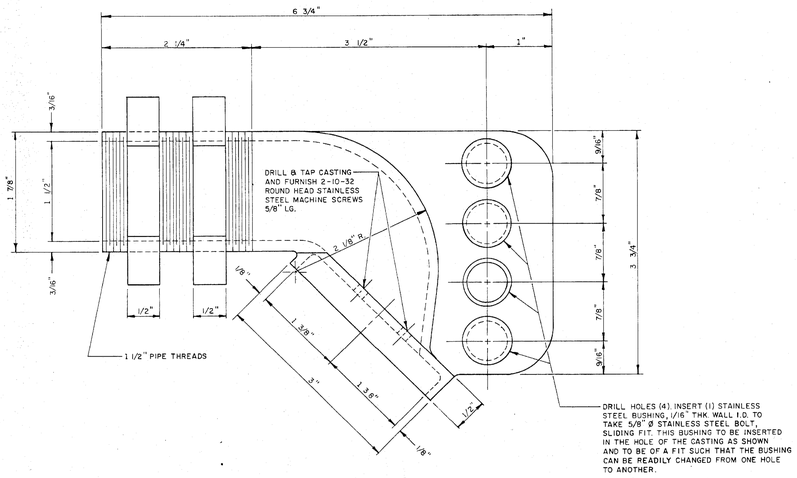

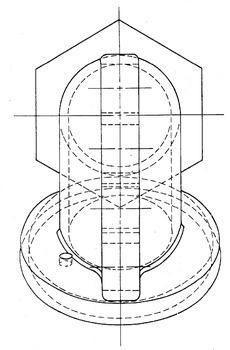

WIRE OUTLET

SCALE: FULL SIZE

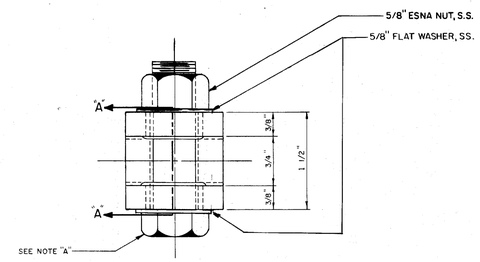

NOTE "A"

DRILL CASTING FOR STAINLESS STEEL BUSHINGS. FURNISH AND INSERT BUSHINGS. FORCE FIT INTO CASTING. BUSHINGS TO HAVE 1/16" THICK WALL WITH I.D. TO TAKE 5/8" DIA. STAINLESS STEEL BOLTS. SLIDING FIT. FURNISH (2) 5/8" DIA. 11 NC CLASS 2 FIT STAINLESS STEEL HEX. HEAD BOLTS AND 2 STAINLESS STEEL HEX. **ESNA** NUTS FOR SAME (EACH CASTING)

MATERIAL

THE UNIVERSAL JOINT AND WIRE OUTLET SHALL BE CAST OF **85-5-5-5 BRONZE.**

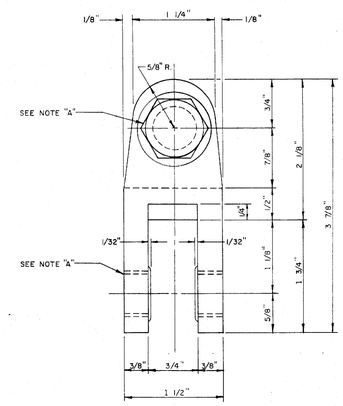

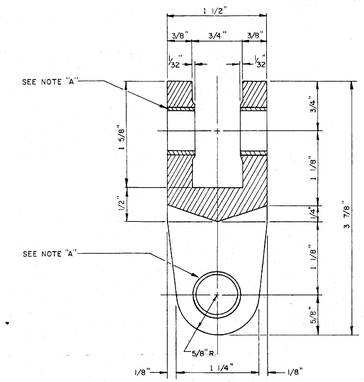

SECTION A-A

UNIVERSAL JOINT

SCALE: FULL SIZE

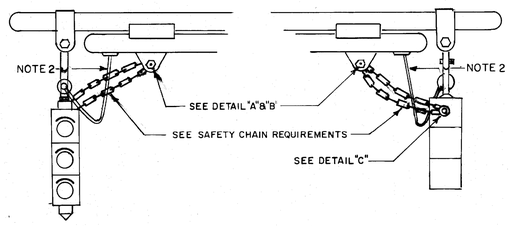

TYPICAL INSTALLATION FOR TWO OR MORE TRAFFIC SIGNALS

TYPICAL INSTALLATION FOR ONE TRAFFIC SIGNAL

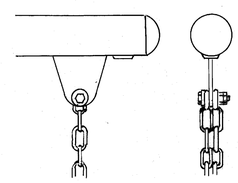

DETAIL "A" DETAIL "B"

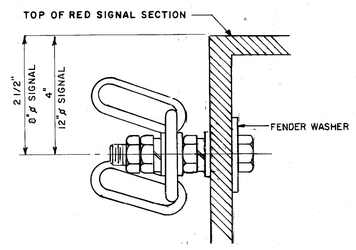

DETAIL "C"

SAFETY CHAIN REQUIREMENTS FOR TWO OR MORE TRAFFIC SIGNALS

FURNISH

42" OF 1/4" HOT DIPPED GALVANIZED COILPROOF STRAIGHT LINK CHAIN.

1 - 5/16" x 2 1/2" LG. STAINLESS STEEL HEX HEAD BOLT, THD. LG. 2 x DIA. + 1/4" - 0.

2 - 5/16" Ø STAINLESS STEEL HEX. NUTS. (ESNA)

2 - 5/16" Ø STAINLESS STEEL FLAT WASHERS.

1 - 5/16" Ø STAINLESS STEEL LOCK WASHER.

SAFETY CHAIN REQUIREMENTS ONE TRAFFIC SIGNAL

FURNISH

42" OF 1/4" HOT DIPPED GALVANIZED COILPROOF STRAIGHT LINK CHAIN.

2 - 5/16" Ø x 2 1/2" LG. STAINLESS STEEL HEX HEAD BOLT, THD LG. 2 x DIA. + 1/4" - 0.

5 - 5/16" Ø STAINLESS STEEL HEX. NUTS. (ESNA)

1 - 5/16" Ø STAINLESS STEEL FENDER WASHER.

3 - 5/16" Ø STAINLESS STEEL LOCK WASHERS

5 - 5/16" Ø STAINLESS STEEL FLAT WASHERS.

TYPICAL SAFETY CHAIN INSTALLATIONS

NOT TO SCALE

NOTES

1) SAFETY CHAIN REQUIRED TO BE FURNISHED & INSTALLED ON ALL CONTRACT INSTALLATIONS BY THE CONTRACTOR.

2) DRIPLOOP TO EXTEND BELOW MAST ARM HANGER WIRE ENTRY.

REV.	DATE	BY	CH.	DESCRIPTION
4	12/01	J.C.	G.S.	HARDWARE CHANGE (ESNA)
3	2/00	J.C.	G.S.	MATERIAL CHANGE, WIRE OUTLET & UNIV. JOINT
2	11/97	J.C.	G.S.	MATERIAL CHANGE, WIRE OUTLET & UNIV. JOINT
1	11/93	F.P.	G.S.	MODIFY SAFETY CHAIN INSTALLATION DETAIL

ENGINEERING DIVISION, D.P.W.
BERGEN COUNTY, NEW JERSEY

EDWARD R. RANUSKA, P.E.
COUNTY ENGINEER N.J.LIC.NO.14215

DATE 1/5/03 SIGNED Edward R. Ranuska

TRAFFIC SIGNAL DETAILS

UNIVERSAL JOINT & WIRE OUTLET

TYPICAL SAFETY CHAIN INSTALLATIONS

DR. BY TMN CHK. BY _____ DATE _____

JOB NO. _____ SCALE _____ DWG. NO. _____ OF _____

11T

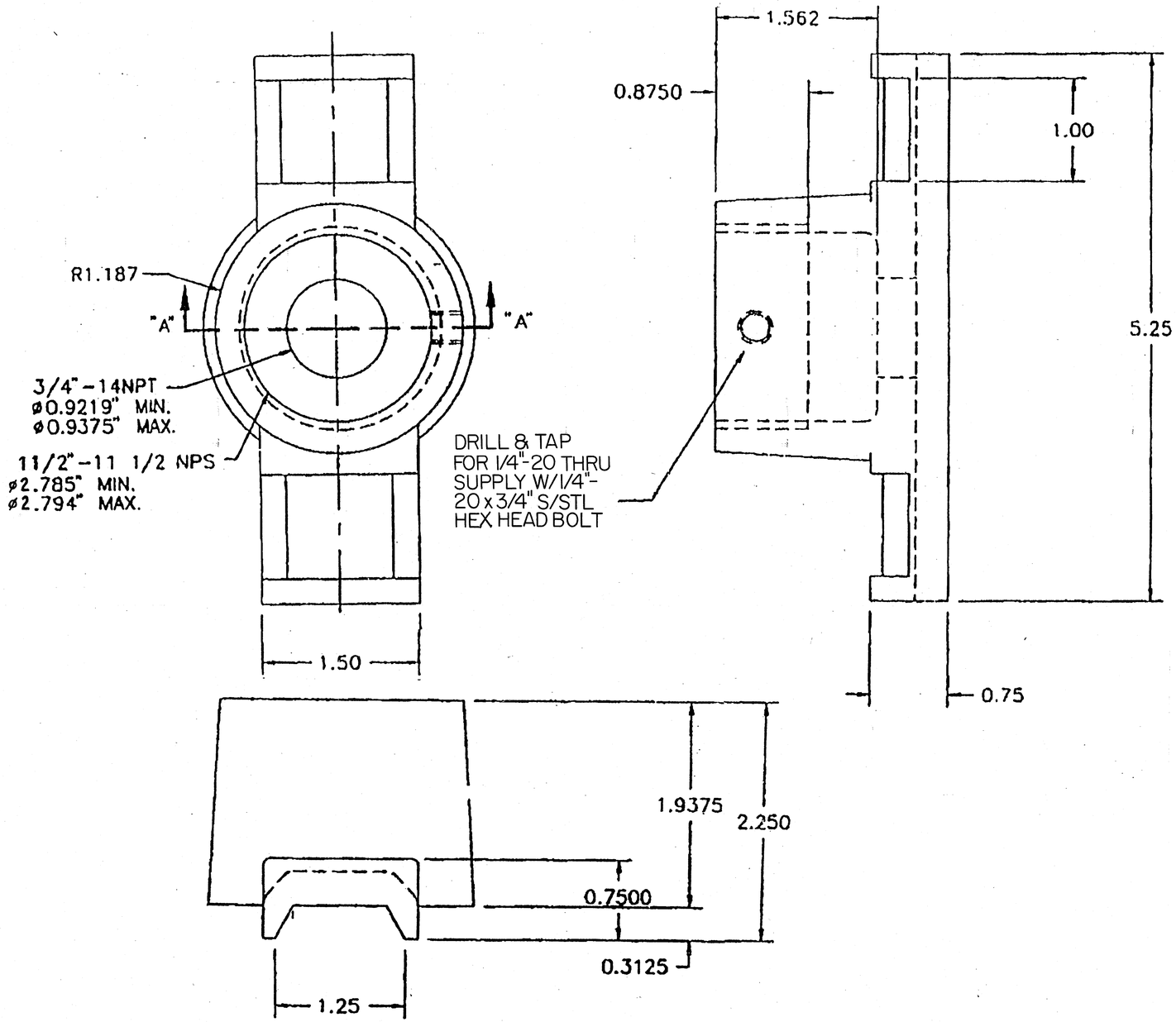

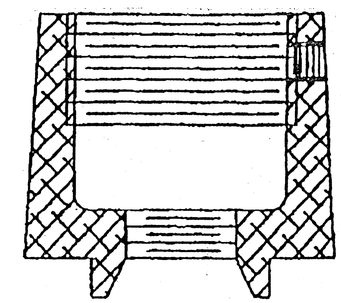

SECTION "A-A"

NOTES

1). BRACKETS SHALL BE 319 CAST ALUMINUM ALLOY AND ARE TO BE SUPPLIED IN NATURAL FINISH UNLESS OTHERWISE SPECIFIED.

2). THE COUNTY OF BERGEN FINDS THE BRACKET LISTED BY PELCO PRODUCTS INC. AS PART NO. SE-4049 TO BE AN ACCEPTABLE EXAMPLE OF THE TYPE.

3). BRACKETS ARE TO BE AFFIXED TO POLES OR PEDESTALS USING TWO BANDS PER BRACKET.

4). BANDING TO BE USED SHALL BE TYPE #201 S/STEEL, .750" WIDE BY .030" THICK. ("BAND-IT" #C206). ATTACHING BUCKLES TO BE TYPE #201 S/STEEL. ("BAND-IT" #C256).

ENGINEERING DIVISION, D.P.W.
BERGEN COUNTY, NEW JERSEY

EDWARD R. RANUSKA, P.E.
COUNTY ENGINEER N.J.LIC.No.14215

SIGNED _____ DATE _____

BRACKET, NARROW,
SIDE MOUNTING,
CAST ALUMINUM

DR. GRC CH. GHS DATE 12/97 SCALE: NONE
JOB No. DWG. No. OF

77

11T

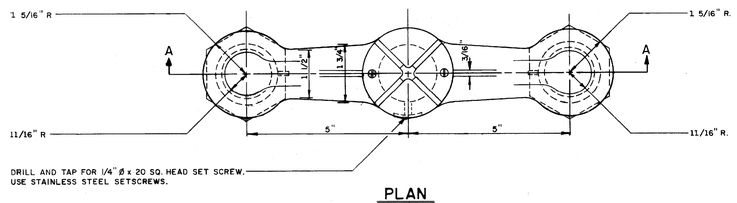

PLAN

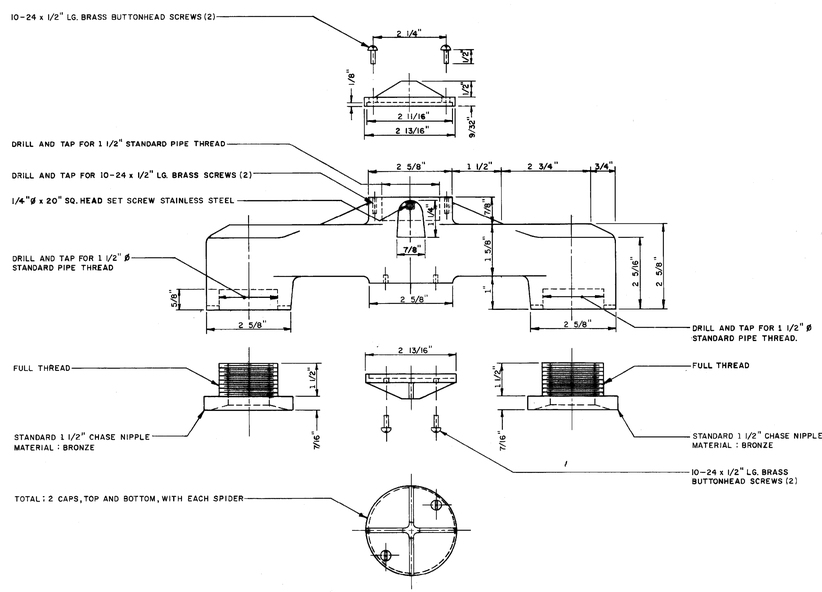

ELEVATION

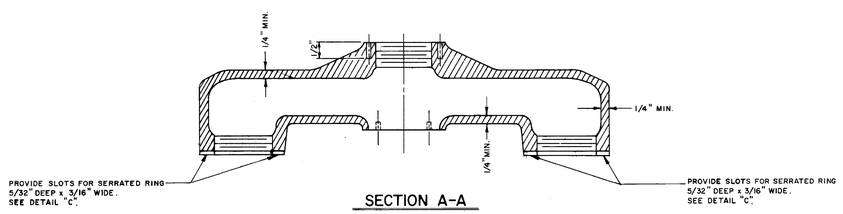

SECTION A-A

SCALE : HALF SIZE

HOLLOW SPIDER FOR 2-WAY ASSEMBLY

*HY-2W

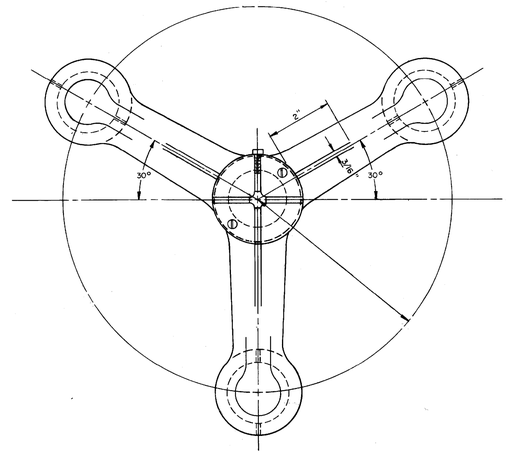

HOLLOW SPIDER FOR 3-WAY ASSEMBLY

HY-3W

SCALE : HALF SIZE

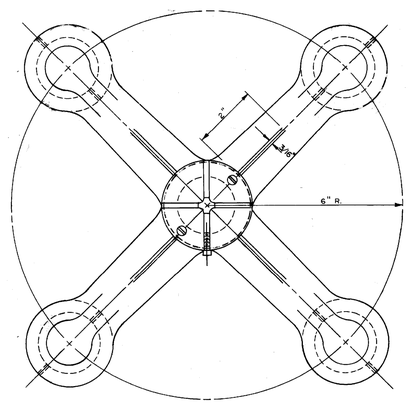

HOLLOW SPIDER FOR 4-WAY ASSEMBLY

*HY-4W

SCALE : HALF SIZE

NOTE :

FOR DETAILED DIMENSIONS OF HY-3W AND HY-4W SPIDERS SEE DETAILED VIEWS OF HY-2W.

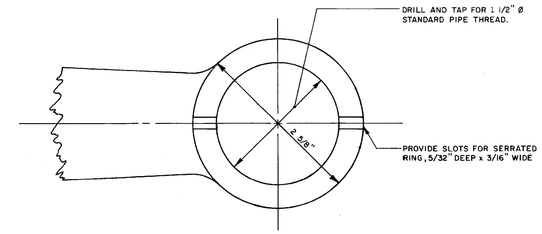

DETAIL - "C"

SCALE : FULL SIZE

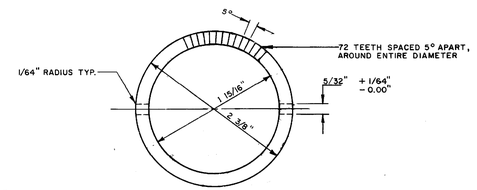

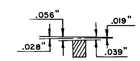

TOOTH PROFILE

NOTE :

TEETH CAN BE INTEGRAL PORTION OF SPIDER CASTING.

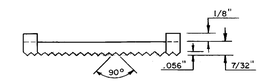

MATERIAL : RING SHALL BE MADE OF DELRIN.

POSITIONING RING

SCALE : FULL SIZE

GENERAL NOTES

MATERIALS :

* 43 ALLOY ALUMINUM CASTING.

PAINT :

THE SURFACE OF THE ALUMINUM CASTING MUST BE CLEANED OF ALL GREASE AND DIRT AND SHOP PAINTED WITH ONE COAT OF ZINC CHROMATE, IRON-OXIDE PAINT CONFORMING TO THE CURRENT REQUIREMENTS OF SPECIFICATION M-142 OF THE A.A.S.H.O. WHEN THIS PAINT HAS THOROUGHLY DRIED. IT SHALL THEN BE SHOP PAINTED WITH A COAT OF HIGHWAY YELLOW PAINT READY MIXED CONFORMING TO THE REQUIREMENTS OF FEDERAL SPECIFICATIONS TT-E-489 FOR ENAMEL; GLOSS, SYNTHETIC (FOR EXTERIOR AND INTERIOR SURFACES) CLASS A, AIR DRYING.

"ORIGINAL DESIGN BY THE NEW JERSEY STATE HIGHWAY DEPT."

ENGINEERING DIVISION, D.P.W.
BERGEN COUNTY, NEW JERSEY

EDWARD R. RANUSKA, P.E.
COUNTY ENGINEER N.J. LIC. NO. 14215

DATE 1/5/83 SIGNED Edward R. Ranuska

DETAILS OF TRAFFIC SIGNAL ASSEMBLY SPIDERS (2, 3, & 4 WAY)

78

DR. BY TMN CHK. BY _____ DATE _____
JOB NO. _____ SCALE _____ DWG. NO. _____ OF _____

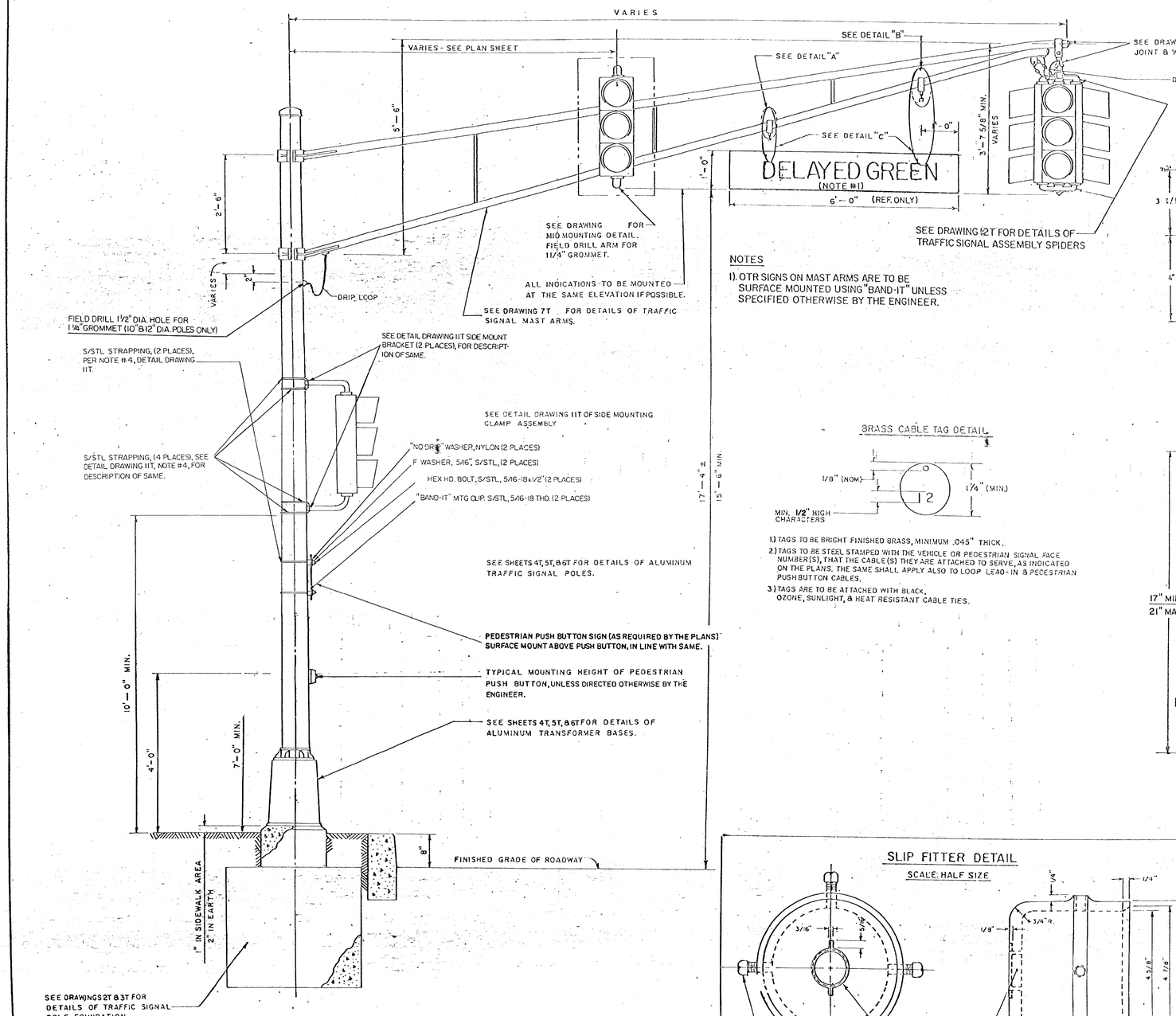

TYPICAL INSTALLATION

NOTES

1). OTR SIGNS ON MAST ARMS ARE TO BE SURFACE MOUNTED USING "BAND-IT" UNLESS SPECIFIED OTHERWISE BY THE ENGINEER.

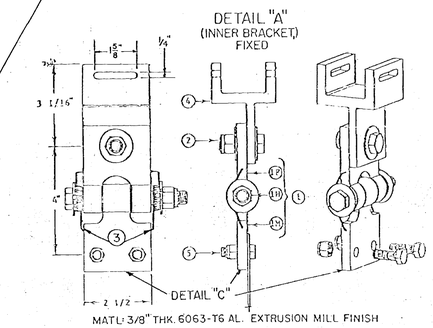

MATL: 3/8" THK. 6063-T6 AL. EXTRUSION MILL FINISH

LEGEND

1. SWIVEL ASSEMBLY (1F) & (1M) SWIVELS PLUS (1H), SWIVEL HARDWARE, HARDWARE AND SPRINGS: STAINLESS STEEL, FLANGE AND SLEEVE BEARINGS: OIL IMPREGNATED BRONZE. SWIVEL BOLT: 1/2 - 13 X 5 1/4" LONG.)
2. 1/2 - 13 STAINLESS STEEL CONNECTING BOLT, FLAT WASHERS AND ESNA NUT.
3. TORSION SPRINGS, SIGN SWING DAMPING.
4. PIVOT BRACKET ("BAND-IT" MOUNTED, SEE NOTE #4, SHEET 11T.)
5. 5/16 X 18 STAINLESS STEEL SIGN ATTACHMENT BOLTS WITH ESNA NUTS.

NOTE: THIS BRACKET IS EQUIVALENT TO HAWKINS #M10J-OCB250FL(S), OR, GARDEN STATE HIGHWAY PRODUCTS #GSHP-NA.

BRASS CABLE TAG DETAIL

1.) TAGS TO BE BRIGHT FINISHED BRASS, MINIMUM .045" THICK.
2.) TAGS TO BE STEEL STAMPED WITH THE VEHICLE OR PEDESTRIAN SIGNAL FACE NUMBER(S), THAT THE CABLE(S) THEY ARE ATTACHED TO SERVE, AS INDICATED ON THE PLANS. THE SAME SHALL APPLY ALSO TO LOOP LEAD-IN & PEDESTRIAN PUSHBUTTON CABLES.
3.) TAGS ARE TO BE ATTACHED WITH BLACK, OZONE, SUNLIGHT, & HEAT RESISTANT CABLE TIES.

DETAIL "B"
(OUTER BRACKET,)
ADJUSTABLE

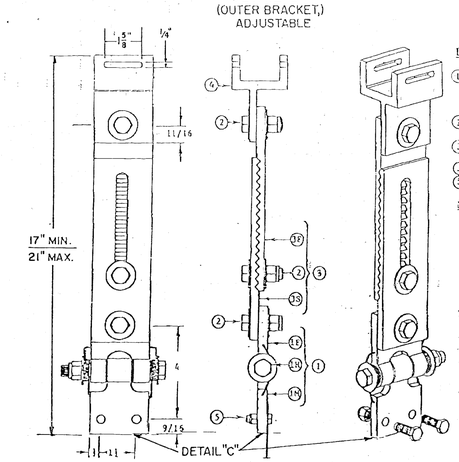

MATL: 3/8" THICK 6063-T6 AL. EXTRUSION MILL FINISH

LEGEND

1. SWIVEL ASSEMBLY (1F) & (1M), SWIVELS PLUS (1H), SWIVEL HARDWARE, HARDWARE AND SPRINGS: STAINLESS STEEL FLANGE AND SLEEVE BEARINGS: OIL IMPREGNATED BRONZE. SWIVEL BOLT: 1/2 - 13 X 4" LONG.)
2. 1/2 - 13 STAINLESS STEEL CONNECTING BOLT, FLAT WASHERS AND ESNA NUT.
3. ADJUSTMENT BAR ASSEMBLY (2) 1/2 - 13 CONNECTING BOLT, (3F) ADJUSTMENT BAR, FIXED, (3S) ADJUSTMENT BAR, SLOTTED.)
4. PIVOT BRACKET ("BAND-IT" MOUNTED, SEE NOTE #4, SHEET 11T.)
5. 5/16 X 18 STAINLESS STEEL SIGN ATTACHMENT BOLTS WITH ESNA BOLT.

NOTES: THIS BRACKET IS EQUIVALENT TO HAWKINS #M10J-OCB250AL(S), OR, GARDEN STATE HIGHWAY PRODUCTS #GSHP-AD.

BOTH MANUFACTURERS' OFFER 6"-12" AND 18" EXTENDER ADAPTER BARS FOR THE OUTER BRACKET ASSEMBLY TO ALLOW FOR SIGN LEVELING WITH DIFFERENT RISE TRAFFIC SIGNAL MAST ARMS.

SLIP FITTER DETAIL

SCALE: HALF SIZE

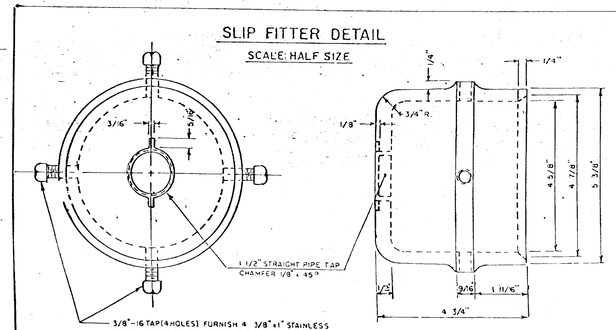

MATERIAL: #43 ALUMINUM ALLOY A.S.T.M.

REV.	DATE	BY	CH.	DESCRIPTION
6	MAR. 1999	J.C.	G.S.	REV. CABLE TAG CHARACTER HT
5	MAR. 1998	J.C.	G.S.	ADD HANGER DETAIL, NOTE REVISIONS
4	JAN. 1993	J.C.	G.S.	REVISED CLAMP MOUNT DIMENSION
3	JAN. 1990	F.P.	G.S.	ADD SLIP FITTER DETAIL
2	9/17/87	T.B.	G.S.	DELETE LOCKWASHERS, ADD ESNA NUTS, ADD BRASS CABLE TAG DETAIL
1	AUG. 1987	F.P.	GMA	REDRAW SHEET DELETE LOUVERED BACKPLATE DETAIL & CABLE IDENTIFICATION TAG DETAIL

ENGINEERING DIVISION, D.P.W.
BERGEN COUNTY, NEW JERSEY

EDWARD R. RANUSKA, P.E.
COUNTY ENGINEER N.J. LIC. No. 14215
SIGNED Edward R. Ranuska DATE 9/15/87

79

TRAFFIC SIGNAL ATTACHMENTS

BRASS CABLE TAG DETAIL

DR. F.P. CH. G.S. DATE AUG 1987 SCALE: N.T.S.
JOB No. DWG. No. OF

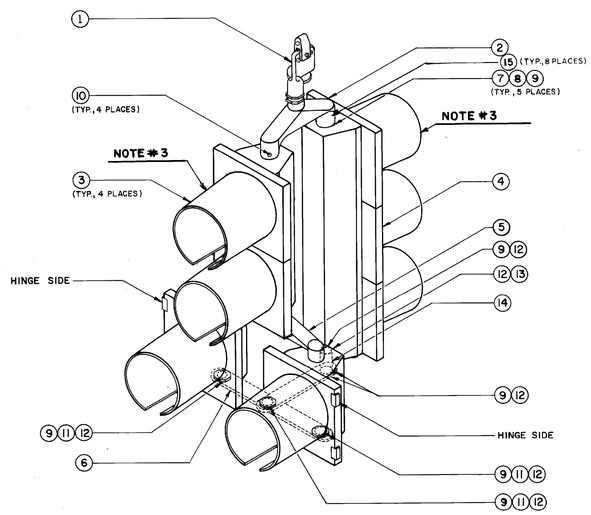

4-3 SECTION, 2 WAY, 12" SIGNAL HEAD ASSEMBLY

NOTE:
BRACKETS TO BE FABRICATED FROM 3/8" THK. ALUMINUM STOCK, 6063-T3 OR EQUAL. FINISH: HIGHWAY YELLOW

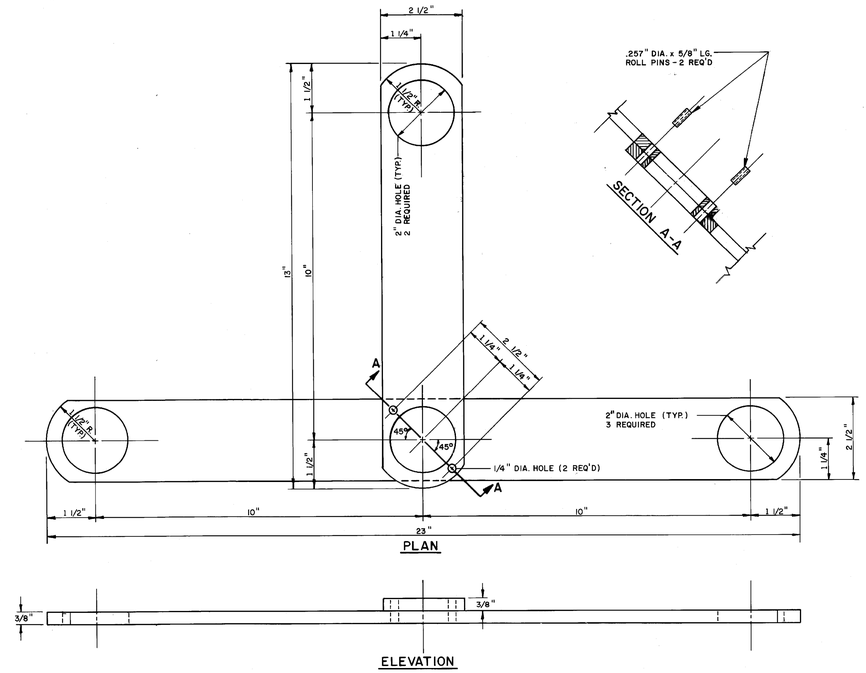

"T-BAR" ASSEMBLY - (HALF SIZE)

NOTES:

1.) MIDDLE AND BOTTOM SIGNAL SECTIONS ARE EQUIPPED WITH HOLES FOR CONNECTING NUTS AND BOLTS. THESE HOLES ARE TO BE PLUGGED WITH RTV SEALANT, OR EQUAL, WHERE THEY ARE UNUSED AND EXPOSED.

2.) ASSEMBLED HEIGHT TO BE APPROXIMATELY 55" FROM MAST ARM HANGER PIVOT POINT TO BOTTOM OF "T" BAR.

3.) **12" RED SIGNAL SECTIONS TO BE LED TYPE.**

4.) A "LEFT GREEN ARROW" SHALL BE USED ONLY FOR A LAGGING TURN INDICATION. A BIMODAL, **LED, YELLOW-GREEN** ARROW SECTION AS DESCRIBED IN THE SPECIFICATIONS, IS TO BE USED FOR LEADING TURN INDICATIONS.

SUGGESTED BILL of MATERIALS

NUMBER	DESCRIPTION	QUANTITY
1	CAST-IRON WIRE ENTRY MAST ARM HANGER, AND CLEVIS COMPLETE WITH 1 1/2" SETSCREW LOCKNUT, BRONZE. (1 1/2" OF THREADED HUB ON HANGER TO BE REMOVED PRIOR TO ASSEMBLY.)	1
2	ALUMINUM, 2-WAY HOLLOW BRACKET, 1 1/2" HUBS - 10" CENTERS, WITH LOCKING SETSCREW & BLANKOFF CAP, HIGHWAY YELLOW. (DRILL & TAP END HUBS FOR 1/4"-20 x 1/2" ALLEN SETSCREW.)	1
3	12" SIGNAL SECTIONS, ALUMINUM, WITH TUNNEL VISOR, HIGHWAY YELLOW WITH POLY. LENSES. (1 RED, 1 YELLOW, 1 GREEN, 1 LEFT GREEN ARROW OR 1 BIMODAL YELLOW-GREEN ARROW) SEE NOTES 1 & 4.	4
4	12", 3 SECTION, 1 WAY, RYG, ALUMINUM, WITH TUNNEL VISOR, HIGHWAY YELLOW WITH POLY LENSES. (SEE NOTE #1)	1
5	ALUMINUM, 3-WAY INLINE HOLLOW BRACKET, 1 1/2" HUBS - 10" CENTERS, WITH LOCKING SETSCREW & BLANKOFF CAP, HIGHWAY YELLOW. (DRILL & TAP END HUBS FOR 1/4"-20 x 1/2" ALLEN SETSCREW.)	1
6	"T"-BAR, FABRICATE PER DWG., HIGHWAY YELLOW.	1
7	MALLEABLE LOCK NIPPLE, LONG. 1 3/8" x 1 1/2" THD.	5
8	WASHER, NEOPRENE, 1 15/16" I.D. - 2 11/16" O.D.	5
9	WASHER, SHAKEPROOF, CADMIUM, 1 1/2" CONDUIT	11
10	ALLEN, CUP HEAD SETSCREW, 1/4 - 20 x 1/2"	4
11	1 1/2" ORNAMENTAL CAP, ALUMINUM, LONG. HIGHWAY YELLOW.	3
12	1 1/2" MALLEABLE SETSCREW LOCKNUT, MACHINED FOR SHURLOCK RING.	7
13	1 1/2" SHURLOCK LOCKING RING.	1
14	NIPPLE, STEEL, GALVANIZED, HIGHWAY YELLOW, NPT BOTH ENDS, 1 1/2" x 6 1/2" LG.	1

REV.	DATE	BY	CH.	DESCRIPTION
2	11/24/97	GRC	GHS	ALUM. SIGS. & LEDS.
1	3/22/90	TMN	GHS	ADD ARROWS/REINF. RATES

ENGINEERING DIVISION, D.P.W.
BERGEN COUNTY, NEW JERSEY

EDWARD R. RANUSKA, P.E.
COUNTY ENGINEER N.J. LIC. No. 14215

SIGNED Edward R. Ranuska DATE 9/15/87

4/3 SECTION, 2 WAY, TRAFFIC SIGNAL HEAD ASSEMBLY (12")

DR. TMN CH. GS DATE 2-5-86 SCALE: 1" =
JOB No. DWG. No. OF

80

SITE LOCATION CHART

TOC N/S	JOB SITE	PLAN SHEET	ROUTE AND INTERSECTION	MUNICIPALITY	COUNTY	DEVICE	TYPE	CAMERA MOUNT LOCATION	COMMUNICATIONS
N	#1	ITS-3	ROUTE 46 EB M.P. 70.00	LITTLE FERRY	BERGEN	CAMERA	DOME	CAMERA STANDARD TYPE A	FIBER OPTIC

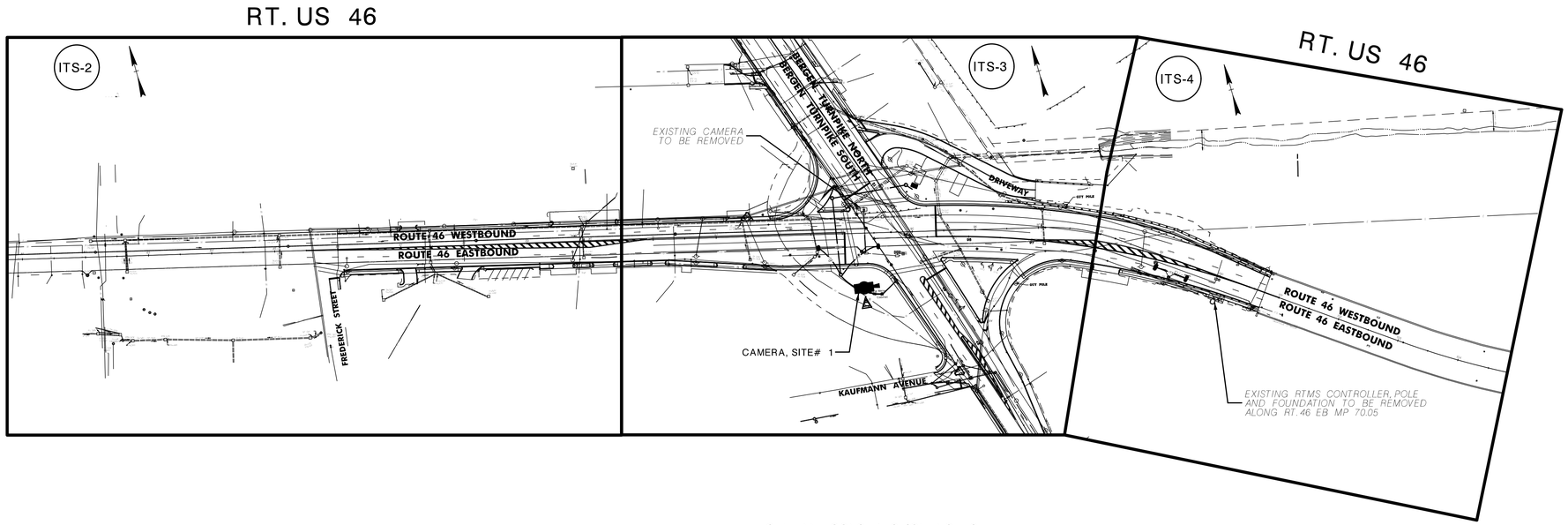

ABBREVIATIONS

ITS	INTELLIGENT TRANSPORTATION SYSTEM
J.B.	JUNCTION BOX
L.F.	LINEAR FEET
M.P.	MILEPOST
NJDOT	NEW JERSEY DEPARTMENT OF TRANSPORTATION
N.T.S.	NOT TO SCALE
STA.	STATION
STMC	STATEWIDE TRAFFIC MANAGEMENT CENTER
T.B.A.	TO BE ABANDONED
T.B.R.	TO BE REMOVED
TON	TRAFFIC OPERATIONS NORTH
TTS	TRAVEL TIME SYSTEM
TYP.	TYPICAL
MMN	MOBILITY MANAGEMENT NORTH
M.P.	MILE POST
MSE	MOBILITY AND SYSTEM ENGINEERING
PDU	POWER DISTRIBUTION UNIT
STMC	STATEWIDE TRAFFIC MANAGEMENT CENTER
RT.	ROUTE

LEGEND OF SYMBOLS & NOTATIONS

EXISTING	PROPOSED	
J.B.	J.B.	JUNCTION BOX ITS TYPE C
ITS	ITS	ITS WIRE & CABLES
		JUNCTION BOX ITS TYPE A
		RTMS CONTROLLER CABINET
		2MMC TYPE CABINET
		CCTV CAMERA (WITH BLIND SPOT)
Meter Cabinet	Meter Cabinet	METER CABINET, TYPE A
		CONTROLLER CABINET W/SIDEWALK
		JUNCTION BOX FOUNDATION
		CAMERA POLE W/FOUNDATION

GENERAL CONSTRUCTION NOTES:

1. EXISTING INFORMATION WAS OBTAINED FROM AVAILABLE PLANS PREPARED UNDER "RT 80 MAGIC CONTRACT NO. 1A". VERIFY ALL EXISTING EQUIPMENT AND CONNECTIONS PRIOR TO START OF WORK. FIELD VERIFY ALL THE EXISTING INFORMATION AND NOTIFY THE RE OF ANY DISCREPANCIES FOUND IN THE FIELD FOR REMEDIATION PRIOR TO THE START OF ANY WORK. THE PLANS ARE AVAILABLE UPON REQUEST FROM NJDOT ENGINEERING DOCUMENT UNIT (EDU) IN TRENTON.
2. FIELD VERIFY THE EXISTING UNDERGROUND UTILITIES PRIOR TO INSTALLING NEW CONDUITS AND JUNCTION BOXES. ENSURE MINIMUM DISTANCE REQUIRED BY THE UNDERGROUND UTILITY OWNERS IS MAINTAINED BETWEEN THE EXISTING SUBSURFACE UTILITIES AND THE PROPOSED ITS/ELECTRICAL FACILITIES. PROTECT ALL UTILITIES DURING CONSTRUCTION.
3. NOTIFY THE RE AT LEAST SEVEN (7) WORKING DAYS BEFORE THE START AND/ OR COMPLETION OF ANY ITS WORK.
4. FIELD VERIFY EXISTING CONDUITS AND JUNCTION BOXES. CLEAN THE EXISTING CONDUITS FOR FIBER OPTIC CABLE INSTALLATION PER 701.03.
5. COORDINATE WITH OFFICE OF INFORMATION TECHNOLOGY AT 609-530-5612 AND OBTAIN IP ADDRESS PRIOR TO SUBMITTING THE WORKING DRAWINGS.
6. STAKE OUT ALL CONDUIT RUNS, JUNCTION BOXES, FOUNDATIONS AND CABINETS FOR APPROVAL PRIOR TO INSTALLATION. ANY LOCATION CHANGES FOR ITS FACILITIES MUST FIRST BE APPROVED BY THE NJDOT MSE PRIOR TO INSTALLATION.
7. COORDINATE WITH DRAINAGE FACILITIES AND OTHER UTILITIES AS REQUIRED. VERIFY THE DEPTH OF DRAINAGE FACILITIES WHEN CROSSING WITH ITS CONDUIT. IF CONFLICT EXISTS, PROVIDE ALTERNATE EXCAVATION PLAN TO RE FOR APPROVAL.
8. INSTALL A SCHEDULE 80 RATED PROTECTIVE SLEEVE WHEN INSTALLING ITS CONDUITS UNDER ROADWAY.
9. COORDINATE WITH MMN FOR THEIR APPROVALS OF CAMERA BLIND SPOTS PRIOR TO INSTALLING THE CAMERAS.
10. COORDINATE WITH MMN FOR THEIR APPROVALS OF FINAL PLACEMENT OF NEW CAMERA POLES.
11. REMOVE AND SALVAGE EXISTING ITS EQUIPMENT WHERE SHOWN TO BE REMOVED. DELIVER THE REMOVED EQUIPMENT TO MSE-MMN. REMOVAL OF ELECTRICAL/ ITS MATERIAL AND EQUIPMENT WILL BE PAID UNDER BID PAY ITEM "CLEARING SITE"

100′ 0 100′ 200′

ITS-1 / ITS-9

NEW JERSEY DEPARTMENT OF TRANSPORTATION

ITS LOCATION PLAN

ROUTE U.S. 46 LITTLE FERRY CIRCLE

CONTRACT NO. 069950373

PB AMERICAS, INC.
CERTIFICATION OF AUTHORIZATION NO. 24GA28029800

ITS FACILITIES
ADVANTAGE ENGINEERING ASSOCIATES, P.C.

MICHAEL D. HELMLINGER
N. J. PROFESSIONAL ENGINEER NO. 24GE03812100

GURVINDER S. DHAMI
NEW JERSEY PROFESSIONAL ENGINEER NO. 24GE04264300

ADVANTAGE ENGINEERING ASSOCIATES, P.C.

MODEL	Default	PROJECT #	1123
USERNAME	dhaliwaln	PROJECT NAME	Route 46 and Little Ferry
PLOT DATE	3/9/2013 8:02:43 PM	PLOTDRIVER	...\NJDOT\plotdrv\nj dot.pdf.plt
DWG. NAME	L:\CADD\1123\Sheet Files\ITS-01.dgn		

BOROUGH OF LITTLE FERRY

COUNTY OF BERGEN

NOTE:

1. REINSTALL FIBER OPTIC CABLES AS DESCRIBED ON SHEET ITS-3 UNDER NOTES.

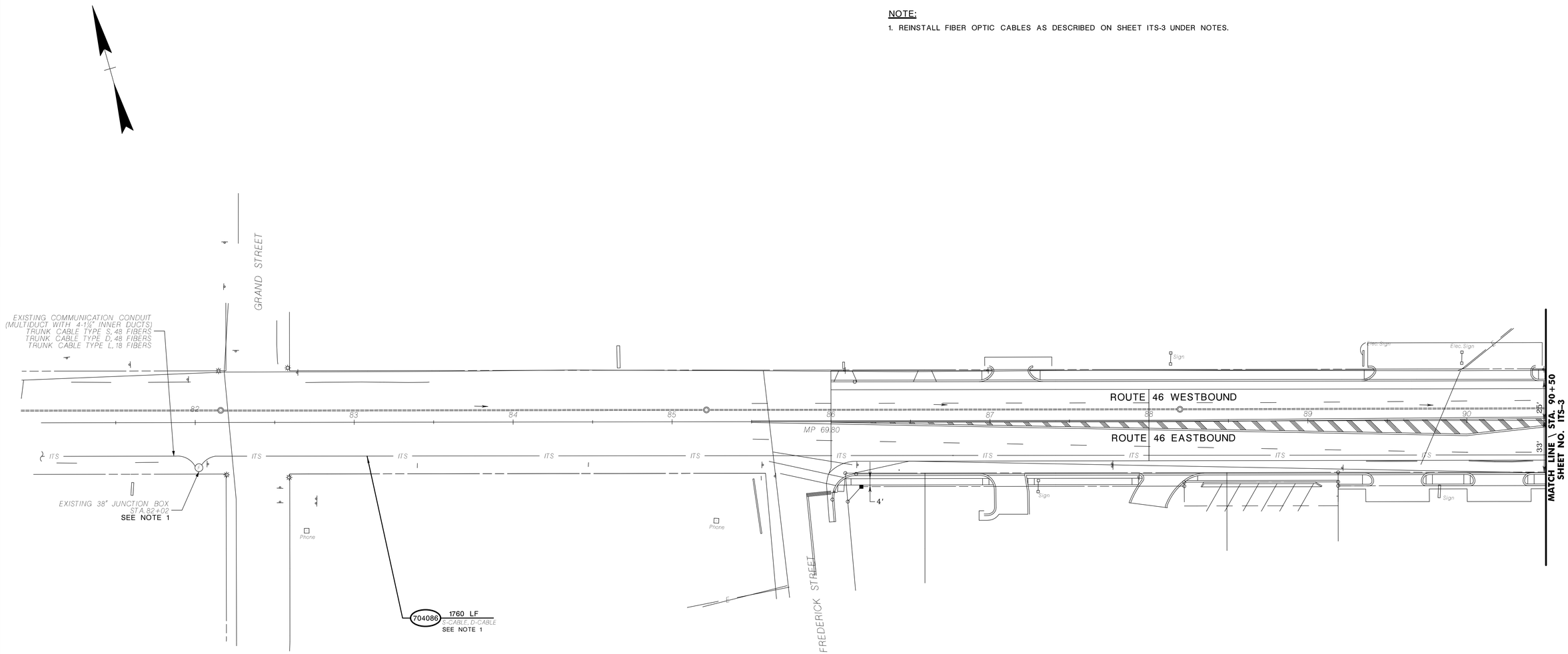

30' 20' 10' 0 30' 60'

ITS-2

ITS-9

TO BE CONSTRUCTED		
ITEM NO.	DESCRIPTION	CONTRACT QUANTITY
704086P	INSTALL FIBER OPTIC CABLE	1760 LF

NEW JERSEY DEPARTMENT OF TRANSPORTATION

ITS PLANS

ROUTE U.S. 46 LITTLE FERRY CIRCLE

CONTRACT NO.

ITS FACILITIES
ADVANTAGE ENGINEERING ASSOCIATES, P.C.

GURVINDER S. DHAMI
NEW JERSEY PROFESSIONAL ENGINEER NO. 24GE04264300

PB AMERICAS, INC.
CERTIFICATION OF AUTHORIZATION NO. 24GA28029800

MICHAEL D. HELMLINGER
N. J. PROFESSIONAL ENGINEER NO. 24GE03812100

ADVANTAGE ENGINEERING ASSOCIATES, P.C.

MODEL	Default	PROJECT #	1123
USERNAME	dhaliwaln	PROJECT NAME	Route 46 and Little Ferry
PLOT DATE	3/9/2013 8:02:45 PM	PLOTDRIVER	...\NJDOT\plotdrv\njdot.pdf.plt
DWG NAME	L:\CADD\1123\Sheet Files\ITS-02.dgn		

BOROUGH OF LITTLE FERRY

COUNTY OF BERGEN

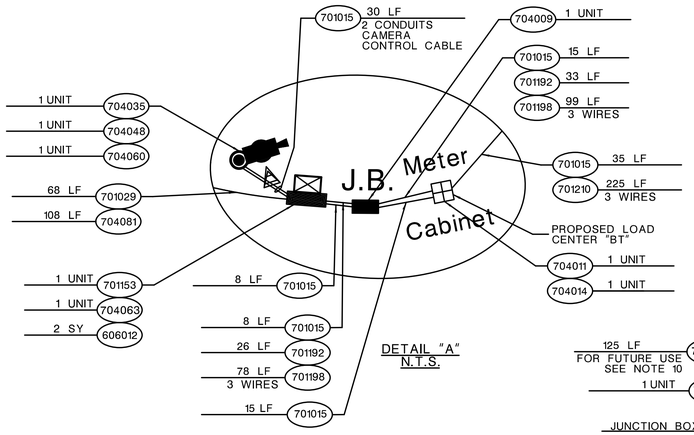

DETAIL "A"
N.T.S.

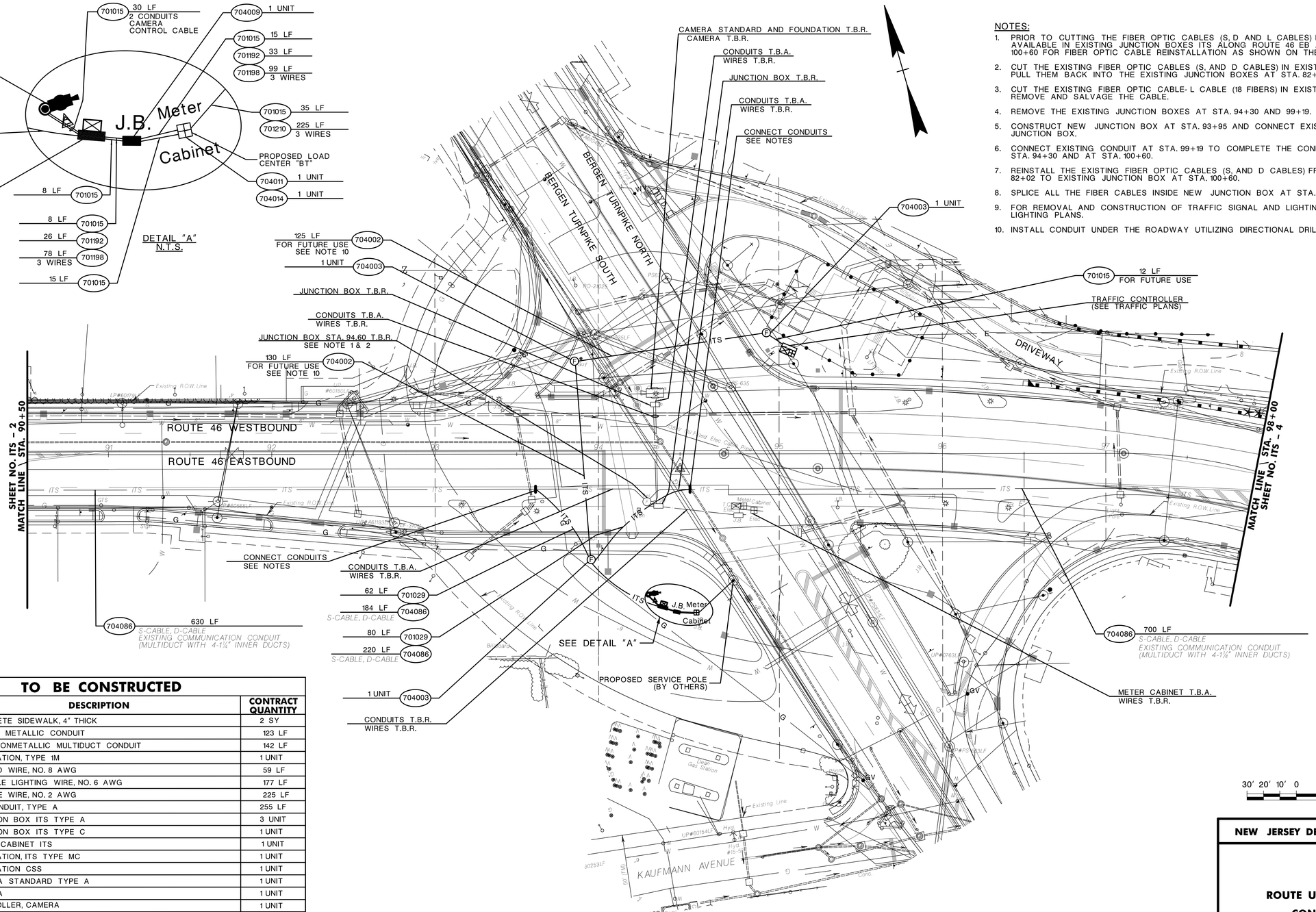

NOTES:

1. PRIOR TO CUTTING THE FIBER OPTIC CABLES (S, D AND L CABLES) ENSURE THAT SUFFICIENT SLACK IS AVAILABLE IN EXISTING JUNCTION BOXES ITS ALONG ROUTE 46 EB AT STA. 82+02, STA. 94+30 AND STA. 100+60 FOR FIBER OPTIC CABLE REINSTALLATION AS SHOWN ON THE PLANS.
2. CUT THE EXISTING FIBER OPTIC CABLES (S, AND D CABLES) IN EXISTING JUNCTION BOX AT STA. 94+30 AND PULL THEM BACK INTO THE EXISTING JUNCTION BOXES AT STA. 82+02 AND STA. 100+60.
3. CUT THE EXISTING FIBER OPTIC CABLE- L CABLE (18 FIBERS) IN EXISTING JUNCTION BOX AT STA. 82+02. REMOVE AND SALVAGE THE CABLE.
4. REMOVE THE EXISTING JUNCTION BOXES AT STA. 94+30 AND 99+19.
5. CONSTRUCT NEW JUNCTION BOX AT STA. 93+95 AND CONNECT EXISTING CONDUITS WITH THE NEW JUNCTION BOX.
6. CONNECT EXISTING CONDUIT AT STA. 99+19 TO COMPLETE THE CONDUIT PATH BETWEEN JUNCTION BOX AT STA. 94+30 AND AT STA. 100+60.
7. REINSTALL THE EXISTING FIBER OPTIC CABLES (S, AND D CABLES) FROM EXISTING JUNCTION BOX AT STA. 82+02 TO EXISTING JUNCTION BOX AT STA. 100+60.
8. SPLICE ALL THE FIBER CABLES INSIDE NEW JUNCTION BOX AT STA. 93+95 TO COMPLETE THE FIBER PATH.
9. FOR REMOVAL AND CONSTRUCTION OF TRAFFIC SIGNAL AND LIGHTING FACILITIES, SEE TRAFFIC SIGNAL AND LIGHTING PLANS.
10. INSTALL CONDUIT UNDER THE ROADWAY UTILIZING DIRECTIONAL DRILL METHOD.

TO BE CONSTRUCTED

ITEM NO.	DESCRIPTION	CONTRACT QUANTITY
606012P	CONCRETE SIDEWALK, 4" THICK	2 SY
701015P	2" RIGID METALLIC CONDUIT	123 LF
701029P	RIGID NONMETALLIC MULTIDUCT CONDUIT	142 LF
701153M	FOUNDATION, TYPE 1M	1 UNIT
701192P	GROUND WIRE, NO. 8 AWG	59 LF
701198P	MULTIPLE LIGHTING WIRE, NO. 6 AWG	177 LF
701210P	SERVICE WIRE, NO. 2 AWG	225 LF
704002M	ITS CONDUIT, TYPE A	255 LF
704003M	JUNCTION BOX ITS TYPE A	3 UNIT
704009M	JUNCTION BOX ITS TYPE C	1 UNIT
704011M	METER CABINET ITS	1 UNIT
704014M	FOUNDATION, ITS TYPE MC	1 UNIT
704035M	FOUNDATION CSS	1 UNIT
704048M	CAMERA STANDARD TYPE A	1 UNIT
704060M	CAMERA	1 UNIT
704063M	CONTROLLER, CAMERA	1 UNIT
704081P	FIBER OPTIC CABLE TYPE F	108 LF
704086P	INSTALL FIBER OPTIC CABLE	1734 LF

30' 20' 10' 0 30' 60'

ITS-3
ITS-9

NEW JERSEY DEPARTMENT OF TRANSPORTATION

ITS PLANS

ROUTE U.S. 46 LITTLE FERRY CIRCLE

CONTRACT NO.

ITS FACILITIES
ADVANTAGE ENGINEERING ASSOCIATES, P.C.

GURVINDER S. DHAMI
NEW JERSEY PROFESSIONAL ENGINEER NO. 24GE04264300

PB AMERICAS, INC.
CERTIFICATION OF AUTHORIZATION NO. 24GA28029800

MICHAEL D. HELMLINGER
N. J. PROFESSIONAL ENGINEER NO. 24GE03812100

ADVANTAGE ENGINEERING ASSOCIATES, P.C.

MODEL	Default	PROJECT #	1123
USERNAME	dhalwaln	PROJECT NAME	Route 46 and Little Ferry
PLOT DATE	3/9/2013 8:02:47 PM	PLOTDRIVER	...\NJDOT\plotdrv\njdot.pdf.plt
DWG. NAME	L:\CADD\1123\Sheet Files\ITS-03.dgn		

BOROUGH OF LITTLE FERRY

COUNTY OF BERGEN

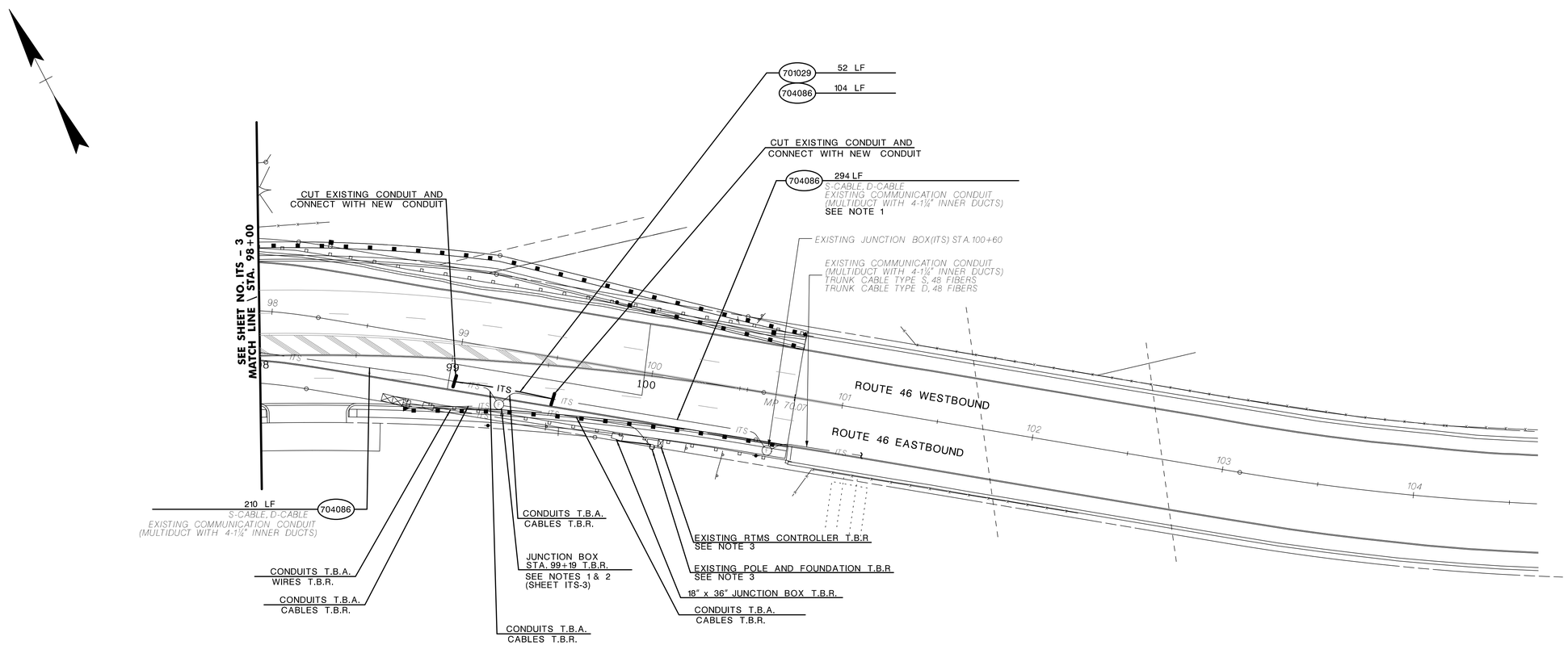

TO BE CONSTRUCTED		
ITEM NO.	DESCRIPTION	CONTRACT QUANTITY
701029P	RIGID NONMETALLIC MULTIDUCT CONDUIT	52 LF
704086P	INSTALL FIBER OPTIC CABLE	608 LF

NOTES:

1. INSTALL FIBER OPTIC CABLE AS DESCRIBED ON SHEET ITS-3 NOTES.
2. FOR REMOVAL AND CONSTRUCTION OF LIGHTING FACILITIES SE LIGHTING PLANS.
3. REMOVE EXISTING RTMS DETECTOR POLE, FOUNDATION AND SALVAGE REMOVED EQUIPMENT.

30' 20' 10' 0 30' 60'

ITS-4

ITS-9

NEW JERSEY DEPARTMENT OF TRANSPORTATION

ITS PLANS

ROUTE U.S. 46 LITTLE FERRY CIRCLE

CONTRACT NO.

PB AMERICAS, INC.
CERTIFICATION OF AUTHORIZATION NO. 24GA28029800

MICHAEL D. HELMLINGER
N. J. PROFESSIONAL ENGINEER NO. 24GE03812100

ITS FACILITIES
ADVANTAGE ENGINEERING ASSOCIATES, P.C.

GURVINDER S. DHAMI
NEW JERSEY PROFESSIONAL ENGINEER NO. 24GE04264300

ADVANTAGE ENGINEERING ASSOCIATES, P.C.

MODEL	Default	PROJECT #	1123
USERNAME	dhaliwaln	PROJECT NAME	Route 46 and Little Ferry
PLOT DATE	3/9/2013 8:02:48 PM	PLOTDRIVER	...\NJDOT\plotdrv\njdot.pdf.plt
DWG NAME	L:\CADD\1123\Sheet Files\ITS-04.dgn		

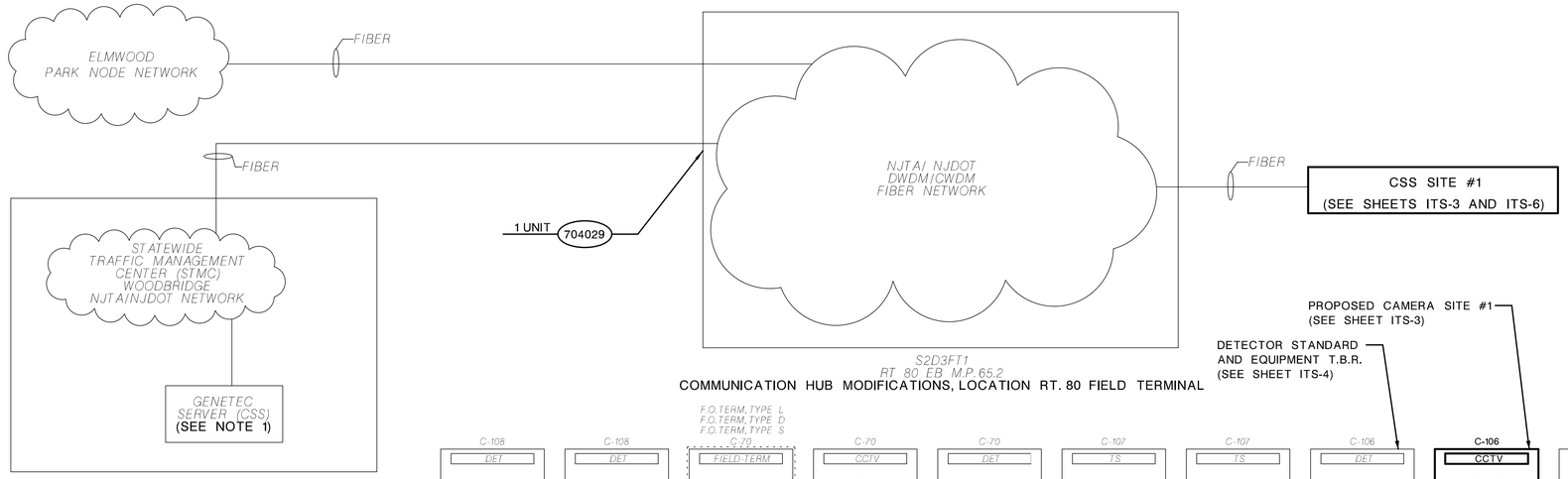

COMMUNICATIONS NOTES:

1. INTEGRATE ALL PROPOSED CAMERAS INTO EXISTING GENETEC SERVERS LOCATED AT STMC WOODBRIDGE. COORDINATE WITH NJTA AND PROVIDE SUPPORT AS REQUIRED TO INTEGRATE THE FIELD CAMERAS INTO GENETEC SERVERS. ENSURE THAT PROPOSED ENCODER IN THE FIELD IS COMPATIBLE WITH THE GENETEC OPERATING SOFTWARE.
2. EXISTING INFORMATION WAS OBTAINED FROM AVAILABLE AS BUILT PLANS PREPARED UNDER "ROUTE 80 MAGIC CONTRACT NO. 1A, AND SMART MOVES 2005. FIELD VERIFY THE INFORMATION AND DOCUMENT PER SECTION 701.03.01 AND SECTION 704.03.01.
3. ENSURE ALL NETWORK/PATCH CABLES ARE PROPERLY LABELED USING PLASTIC PRINTED LABELS. SUBMIT WORKING DRAWINGS/CATALOGS TO THE ENGINEER FOR APPROVAL.
4. PERFORM COMPLETE NETWORK CONFIGURATIONS AND SET UP INCLUDING CONFIGURING IP ADDRESS, VLAN, AND NETWORK SECURITY OF NETWORKS SWITCHES TO INTEGRATE THE PROPOSED ITS DEVICES. ESTABLISH CONNECTIONS TO THE EXISTING NJDOT IT/ OIT CISCO NETWORK USING TRUNKING PROTOCOL OR AS APPROVED BY THE RE. COORDINATE WITH NJDOT IT/ OIT FOR CONNECTIONS TO NJDOT IT/OIT NETWORK (CISCO NETWORK).
5. PAYMENT FOR WORK TO BE PERFORMED AT STMC WOODBRIDGE WILL BE PAID UNDER LUMP SUM BID PAY ITEM "CONTROL CENTER SYSTEM, LOCATION STMC".
6. PERFORM LEVEL 2 TESTING BETWEEN FIELD TERMINALS, S2D5FT1 RT. 95 NB M.P. 117.5 AND S2D3FT1 RT. 80 EB M.P. 65.2.
7. PROPOSED WORK IS SHOWN IN BOLD.

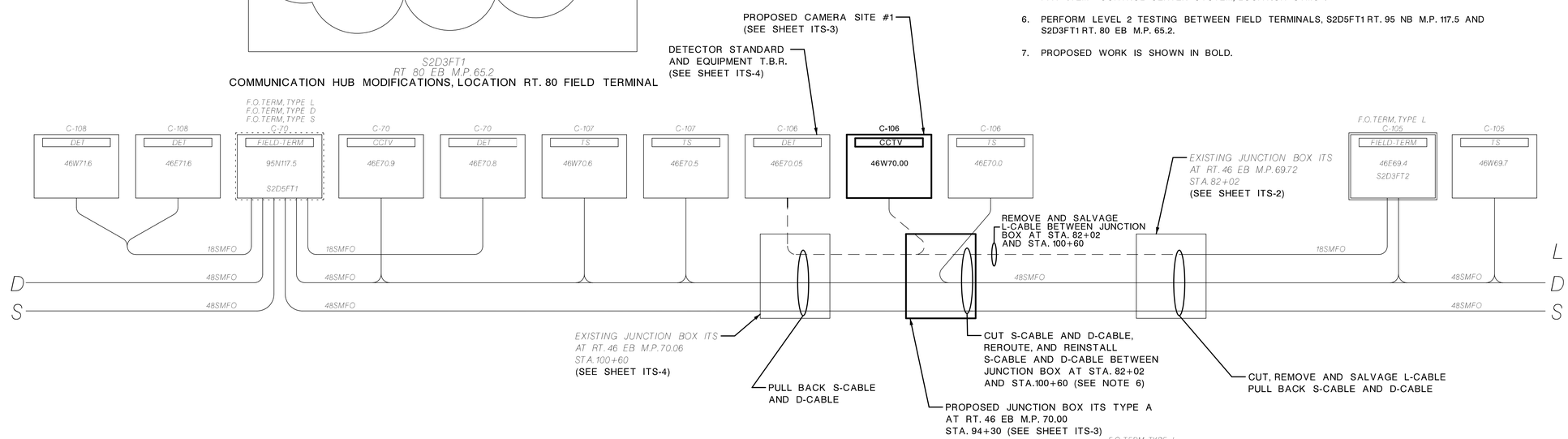

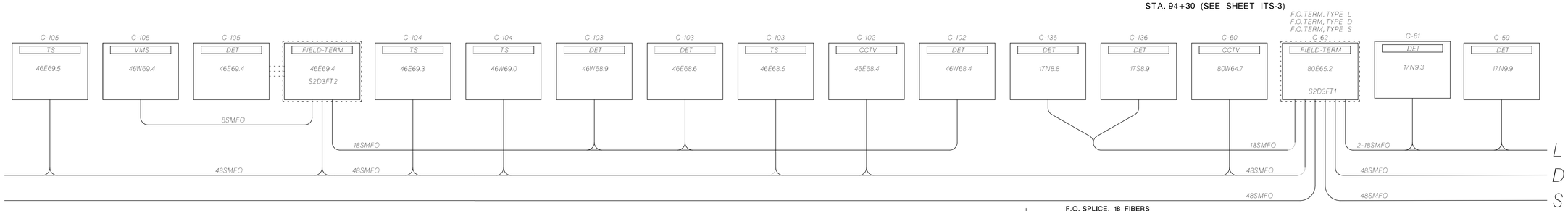

ITEM NUMBER	TO BE CONSTRUCTED	CONTRACT QUANTITY
704029M	COMMUNICATION HUB MODIFICATIONS, LOCATION RT. 80 FIELD TERMINAL	1 UNIT

LEGEND

— — — — — — — CONNECTION TO BE REMOVED

L - LOCAL CABLE
D - DISTRIBUTION CABLE
S - SYSTEM CABLE

80E61.0
80 - ROUTE NUMBER
E - DIRECTION
61.0 - MILEPOST

C-105 - CONSTRUCTION PLAN SHEET NO. 105 FROM CONTRACT "ROUTE 80 MAGIC CONTRACT NO. 1A".

DET = DETECTOR - SPEED/COUNT
VMS = VARIABLE MESSAGE SIGN
CCTV = CLOSED CIRCUIT TELEVISION
HAR = HIGHWAY ADVISORY RADIO
LOOPS = LOOP DETECTORS
VID-DET = VIDEO IMAGING DETECTOR
SPLICE = PATCH PANEL SPLICE BOX
RTF = REMOTE TERMINAL FACILITY

= FIELD TERMINAL CONNECTED DIRECTLY TO FIELD EQUIPMENT VIA TELEPHONE CABLE.

= FIELD TERMINAL CONNECTED DIRECTLY TO FIELD EQUIPMENT VIA TERMINATION CABLE, 8 FIBERS. (8 SMFO)

= FIELD TERMINAL WITH MORE THAN TWO BRANCHES. (SHOWN MORE THAN ONCE ON DIAGRAM)

F.O. SPLICE, 18 FIBERS FOR L CABLE AT TERMINATION POINT TO TERMINATION CABLE, 8 FIBERS

F.O. SPLICE, 18 FIBERS FOR L CABLE TO TERMINATION CABLE, 8 FIBERS

MULTIPLE F.O. SPLICE, 18 FIBERS FOR L CABLE TO TERMINATION CABLE, 8 FIBERS

F.O. SPLICE, 48 FIBERS FOR D CABLE TO TERMINATION CABLE, 8 FIBERS

F.O. SPLICE, 48 FIBERS FOR S CABLE

NETWORK OVERVIEW AND COMMUNICATIONS NOTES

N.T.S.

ITS-5 / ITS-9

NEW JERSEY DEPARTMENT OF TRANSPORTATION

ITS SYSTEM BLOCK DIAGRAM

ROUTE U.S. 46 LITTLE FERRY CIRCLE

CONTRACT NO.

PB AMERICAS, INC.
CERTIFICATION OF AUTHORIZATION NO. 24GA28029800

MICHAEL D. HELMLINGER
N. J. PROFESSIONAL ENGINEER NO. 24GE03812100

ITS FACILITIES
ADVANTAGE ENGINEERING ASSOCIATES, P.C.

GURVINDER S. DHAMI
NEW JERSEY PROFESSIONAL ENGINEER NO. 24GE04264300

ADVANTAGE ENGINEERING ASSOCIATES, P.C.
MODEL Default | PROJECT # 1123
USERNAME dhaliwal | PROJECT NAME Route 46 and Little Ferry
PLOT DATE 3/9/2013 8:02:50 PM | PLOTDRIVER ...\Nuding\pltsdrv-adot.pdf.plt
DWG. NAME L:\CADD\1123\Sheet Files\ITS-05.dgn

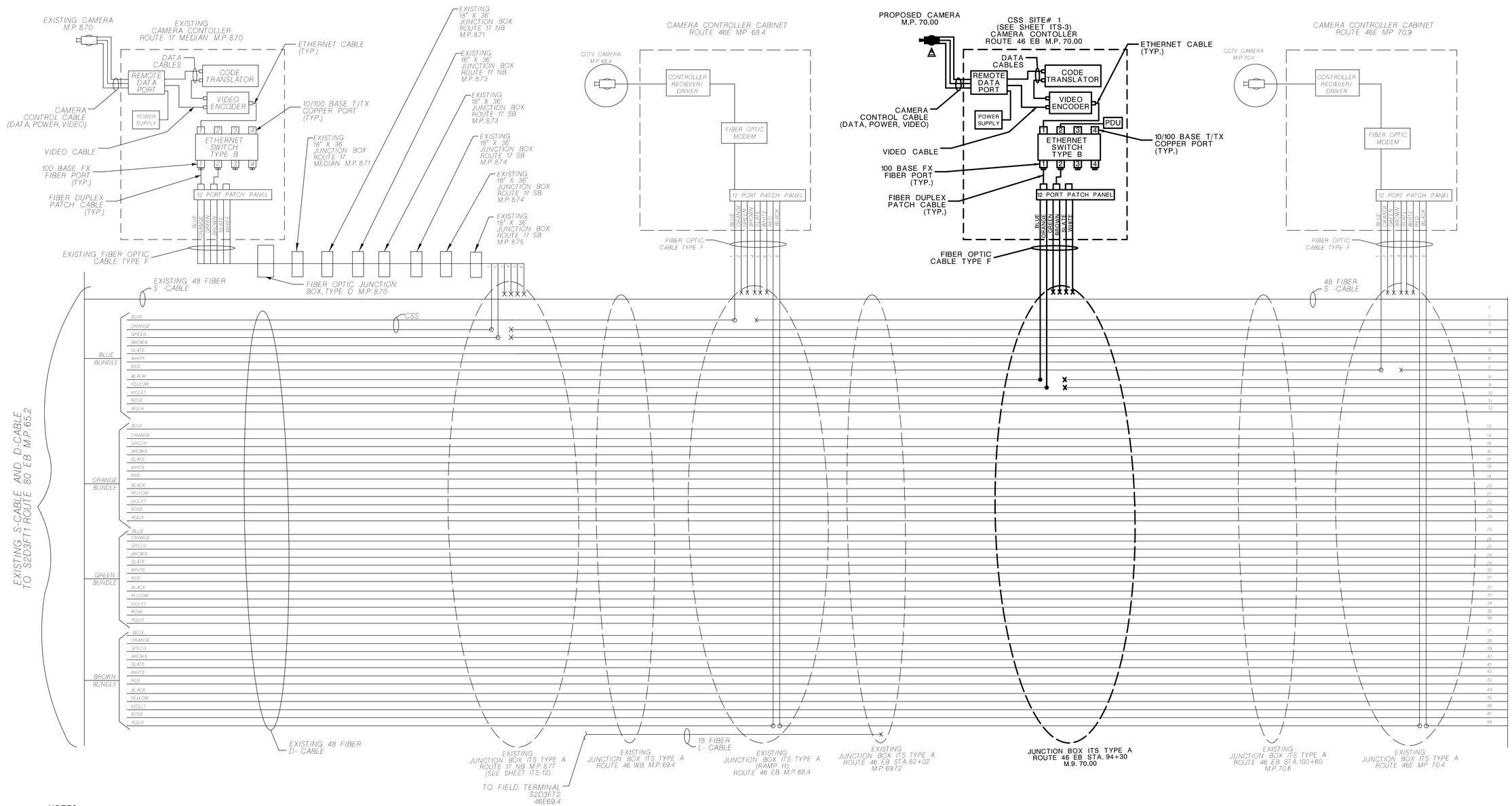

NOTES:

1. EXISTING EQUIPMENT INFORMATION HAS BEEN OBTAINED FROM PROJECT "ROUTE 80 MAGIC" CONTRACT NO. 1A. FIELD VERIFY ALL THE EXISTING INFORMATION AND NOTIFY RESIDENT ENGINEER OF ALL DISCREPANCIES FOUND IN THE FIELD FOR REMEDIATION PRIOR TO THE START OF ANY WORK.
2. FIBER ASSIGNMENTS SHOWN ON THIS PLAN INDICATE PERMANENT CONNECTIONS AT THE COMPLETION OF THIS CONTRACT. FOR EXISTING CONDITIONS REFER TO AS-BUILT PLANS.
3. PROPOSED WORK UNDER THIS CONTRACT IS SHOWN IN BOLD.

LEGEND OF SYMBOLS

- ● DENOTES PROPOSED FIBER OPTIC SPLICE
- ○ DENOTES EXISTING FIBER OPTIC SPLICE
- x DENOTES FIBER OPTIC END

FIBER OPTIC CABLE INTERCONNECTIONS

N.T.S.

ITS-6 / ITS-9

NEW JERSEY DEPARTMENT OF TRANSPORTATION

FIBER SYSTEM BLOCK DIAGRAM

ROUTE U.S. 46 LITTLE FERRY CIRCLE

CONTRACT NO.

PB AMERICAS, INC.
CERTIFICATION OF AUTHORIZATION NO. 24GA28029800

ITS FACILITIES
ADVANTAGE ENGINEERING ASSOCIATES, P.C.

GURVINDER S. DHAMI
NEW JERSEY PROFESSIONAL ENGINEER NO. 24GE04264300

MICHAEL D. HELMLINGER
N. J. PROFESSIONAL ENGINEER NO. 24GE03812100

ADVANTAGE ENGINEERING ASSOCIATES, P.C.

MODEL	Default	PROJECT #	1123
USERNAME	dhaliwaln	PROJECT NAME	Route 46 and Little Ferry
PLOT DATE	3/9/2013 8:02:51 PM	PLOTDRIVER	...\NJDOT\plotdrv\nj dot.pdf.plt
DWG. NAME	L:\CADD\1123\Sheet Files\ITS-06.dgn		

NOTES:

1. EXISTING EQUIPMENT INFORMATION HAS BEEN OBTAINED FROM THE AVAILABLE PLANS OF PROJECT "ROUTE 80 ITS COMMUNICATIONS NETWORK" SONET UPGRADE. FIELD VERIFY THE EXISTING INFORMATION AND NOTIFY RESIDENT ENGINEER OF ALL DISCREPANCIES FOUND IN THE FIELD FOR REMEDIATION PRIOR TO THE START OF ANY WORK.
2. FIBER ASSIGNMENTS SHOWN ON THIS PLAN INDICATE PERMANENT CONNECTIONS AT THE COMPLETION OF THIS CONTRACT. FOR EXISTING CONDITIONS REFER TO AS-BUILT PLANS.
3. PROPOSED WORK UNDER THIS CONTRACT IS SHOWN IN BOLD.

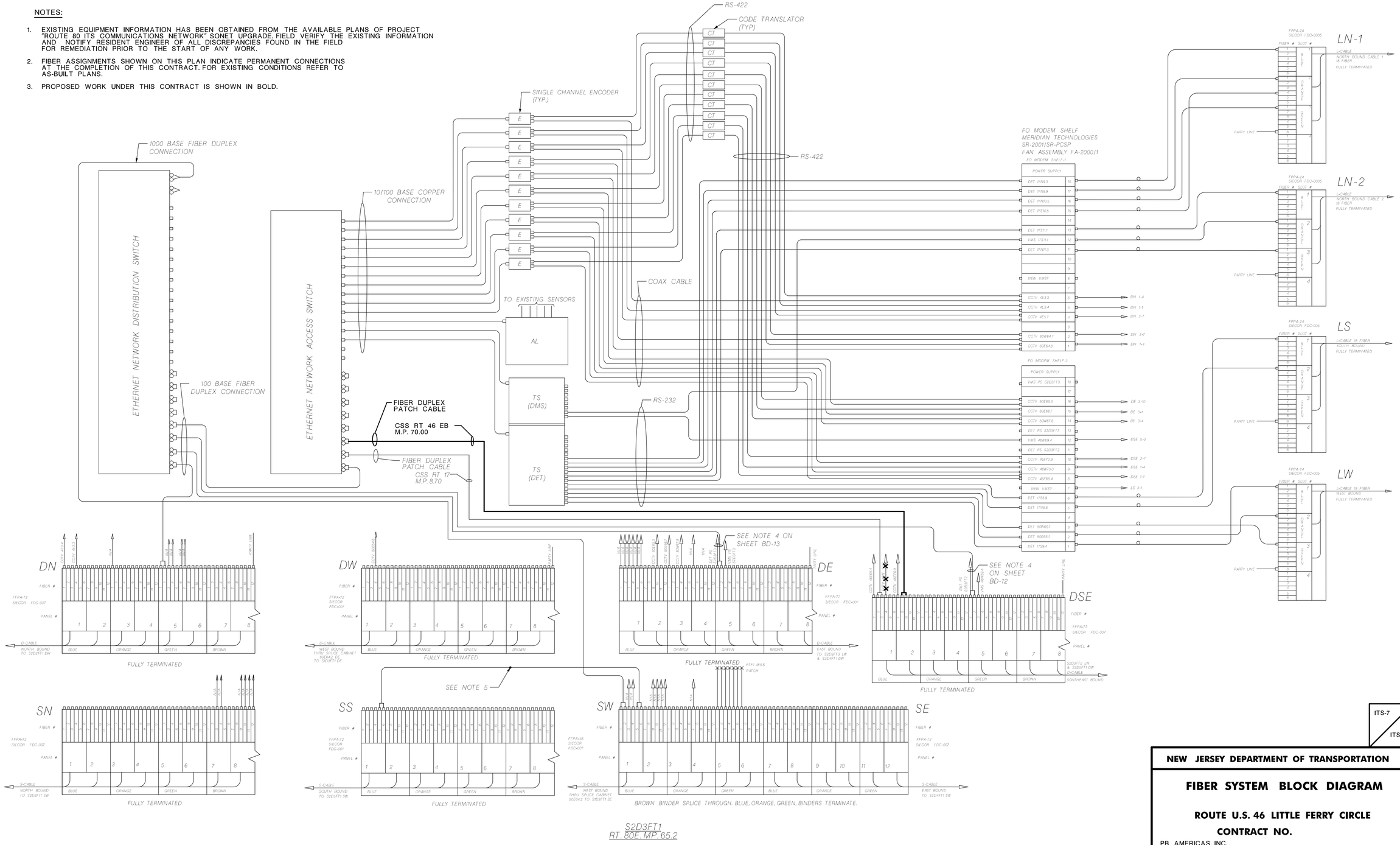

LEGEND OF SYMBOLS

✕ TO BE REMOVED

FIBER OPTIC CABLE INTERCONNECTIONS

N.T.S.

ITS-7 / ITS-9

NEW JERSEY DEPARTMENT OF TRANSPORTATION

FIBER SYSTEM BLOCK DIAGRAM

ROUTE U.S. 46 LITTLE FERRY CIRCLE

CONTRACT NO.

PB AMERICAS, INC.
CERTIFICATION OF AUTHORIZATION NO. 24GA28029800

MICHAEL D. HELMLINGER
N. J. PROFESSIONAL ENGINEER NO. 24GE03812100

ITS FACILITIES
ADVANTAGE ENGINEERING ASSOCIATES, P.C.

GURVINDER S. DHAMI
NEW JERSEY PROFESSIONAL ENGINEER NO. 24GE04264300

87

ADVANTAGE ENGINEERING ASSOCIATES P.C.

MODEL	Default	PROJECT #	1123
USERNAME	dhaliwaln	PROJECT NAME	Route 46 and Little Ferry
PLOT DATE	3/9/2013 8:02:52 PM	PLOTDRIVER	...\NJDOT\plotdrv\njdot.pdf.plt
DWG NAME	L:\CADD\1123\Sheet Files\ITS-07.dgn		

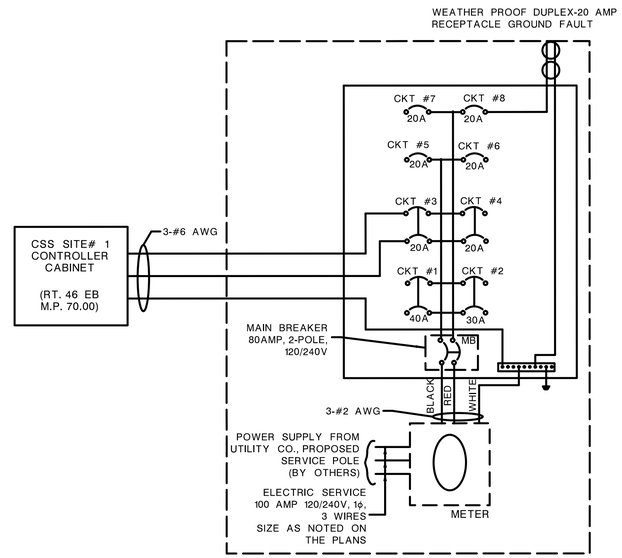

METER CABINET ITS
RT. 46 EB M.P. 70.00)

NOTES

1.) PROVIDE BONDING AND GROUNDING IN ACCORDANCE WITH NEC REQUIREMENTS.

2.) FOR METER CABINET DETAILS, SEE NJDOT STANDARD DETAIL ITS-704-23.

SCHEMATIC WIRING DIAGRAM

N.T.S.

ITS FACILITIES
ADVANTAGE ENGINEERING ASSOCIATES, P.C.

GURVINDER S. DHAMI
NEW JERSEY PROFESSIONAL ENGINEER NO. 24GE04264300

ITS-8
ITS-9

NEW JERSEY DEPARTMENT OF TRANSPORTATION

ITS DETAILS

ROUTE U.S. 46 LITTLE FERRY CIRCLE

CONTRACT NO.

PB AMERICAS, INC.
CERTIFICATION OF AUTHORIZATION NO. 24GA28029800

MICHAEL D. HELMLINGER
N. J. PROFESSIONAL ENGINEER NO. 24GE03812100

88

ADVANTAGE ENGINEERING ASSOCIATES, P.C.

MODEL	Default	PROJECT #	1123
USERNAME	dhalwalh	PROJECT NAME	Route 46 and Little Ferry
PLOT DATE	3/9/2013 8:02:53 PM	PLOTDRIVER	...\NJDOT\plotdrv\njdot.pdf.plt
DWG. NAME	L:\CADD\1123\Sheet Files\ITS-08 Schematic Wiring Diagram.dgn		

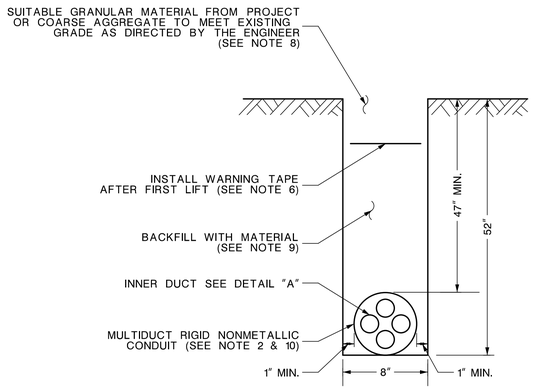

IN GRASS AREAS

N. T. S.

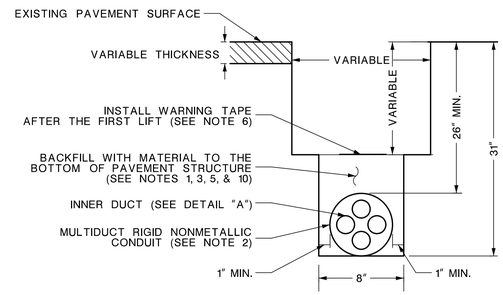

IN REHABILITATED/RECONSTRUCTED/ROADWAY AREA

N. T. S.

NOTES:

1. BEFORE BACKFILLING TRENCH, REMOVE ALL CUT DEBRIS FROM SITE.
2. CENTER THE RIGID NONMETALLIC MULTIDUCT CONDUIT (SEE PLANS FOR SIZE) IN THE TRENCH AND HOLD FIRMLY IN PLACE WHILE THE TRENCH IS BACKFILLED.
3. ENSURE THE BACKFILL MATERIAL IS COARSE AGGREGATE SIZE NO.8 OR NO.9 BROKEN STONE OR WASHED GRAVEL.
4. ENSURE THE BACKFILL MATERIAL IS MADE IN TWO EQUAL LIFTS. ENSURE EACH LIFT IS THOROUGHLY COMPACTED WITH A MODIFIED VIBRATORY PLATE COMPACTOR. (MINIMUM OF THREE PASSES PER LIFT).
5. ENSURE THE BACKFILL MATERIAL IS MADE IN ONE LIFT AND IS THOROUGHLY COMPACTED WITH A MODIFIED VIBRATORY COMPACTOR (MINIMUM OF THREE PASSES PER LIFT).
6. ENSURE WARNING TAPE IS ORANGE, 4 MIL. FLEXIBLE POLYETHYLENE FILM, RESISTANT TO ACIDS, BASES, HYDROCARBONS AND WATER.
7. PREPARE THE TRENCH BOTTOM FOR RIGID NONMETALLIC CONDUITS TO ELIMINATE LUMPS, RIDGES, JAGGED EDGES AND HOLLOWS UTILIZING BEDDING MATERIAL AS DIRECTED BY THE RE.
8. AFTER MATERIAL IS BACKFILLED, FERTILIZE, SEED AND MULCH.
9. ENSURE THE BACKFILL MATERIAL IS MADE IN LIFTS. THE FIRST LIFT IS A MAXIMUM OF 38" AND ALL OTHER LIFTS ARE A MAXIMUM OF 12". COMPACT EACH LIFT A MINIMUM OF TWO PASSES WITH A VIBRATORY COMPACTOR. ENSURE THE VIBRATORY COMPACTOR HAS A RATED IMPACT FORCE OF 8000-16000 POUNDS THAT IS OPERATED AT 1600 RPM, CAPABLE OF OPERATING WITHIN A TRENCH DEPTH OF 0-26".
10. ENSURE THE VIBRATORY PLATE COMPACTOR HAS A RATED IMPACT FORCE OF APPROXIMATELY 5,000 POUNDS THAT IS OPERATED AT 5,000 CYCLES PER MINUTE WITH A MODIFIED FOOT. ENSURE THE MODIFIED FOOT IS ABLE TO FIT IN A 24" DEEP TRENCH WITH A BASE PLATE OF 4" WIDE. DESIGN THE VIBRATORY PLATE COMPACTOR WITH THE MODIFIED FOOT TO BE PULLED BY A VEHICLE.
11. SLOPE THE TRENCH AND CONDUIT WHEN TRANSITIONING FROM GRASS AREA TO SHOULDER/ROADWAY AREA INSTALLATION.
12. COUPLINGS RECOMMENDED BY THE CONDUIT MANUFACTURER FOR APPROVAL WHEN CONNECTING EXISTING MULTIDUCT CONDUIT TO PROPOSED.

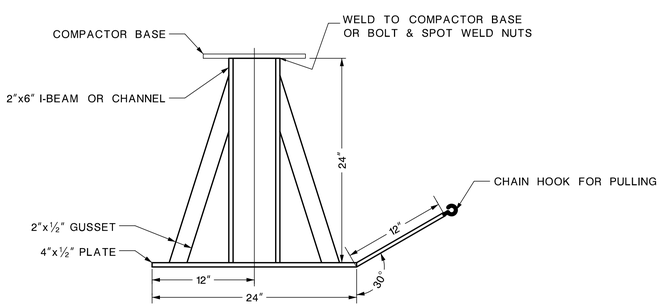

MODIFIED FOOT

N. T. S.

(SEE NOTE 10)

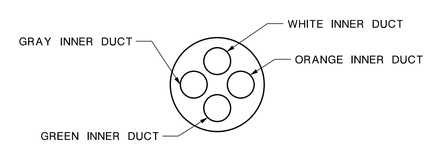

DETAIL "A"

N. T. S.

CAUTION: BURIED FIBER OPTIC CABLE BELOW
CALL NJDOT TRAFFIC OPERATIONS 201-797-3676

6" TYP.

WARNING TAPE

(BLACK LETTERS ON ORANGE BACKGROUND)

RIGID NONMETALLIC MULTIDUCT CONDUIT INSTALLATION DETAIL

ITS-9

ITS-9

NEW JERSEY DEPARTMENT OF TRANSPORTATION

ITS DETAILS

ROUTE U.S. 46 LITTLE FERRY CIRCLE

CONTRACT NO.

PB AMERICAS, INC.

CERTIFICATION OF AUTHORIZATION NO. 24GA28029800

MICHAEL D. HELMLINGER

N. J. PROFESSIONAL ENGINEER NO. 24GE03812100

ITS FACILITIES

ADVANTAGE ENGINEERING ASSOCIATES, P.C.

GURVINDER S. DHAMI

NEW JERSEY PROFESSIONAL ENGINEER NO. 24GE04264300

ADVANTAGE ENGINEERING ASSOCIATES, P.C.

MODEL	Default	PROJECT #	1123
USERNAME	dhalwain	PROJECT NAME	Route 46 and Little Ferry
PLOT DATE	3/9/2013 8:02:54 PM	PLOTDRIVER	...\NJDOT\plotdr-vnjdot_pdf.plt
DWG NAME	L:\CADD\1123\Sheet Files\ITS-09-Conduit Installation Detail.dgn		

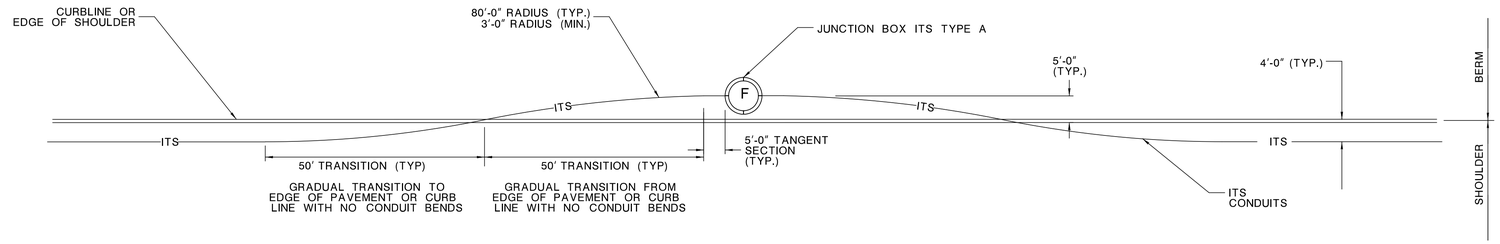

TYPICAL ITS CONDUIT HORIZONTAL TRANSITION

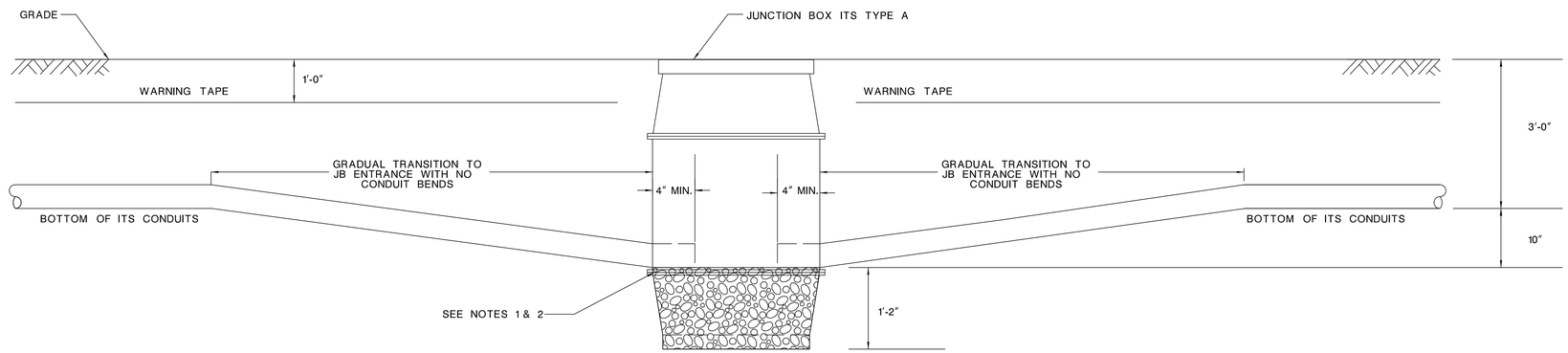

TYPICAL ITS CONDUIT VERTICAL TRANSITION

TYPICAL UNDERGROUND ITS CONDUIT TRANSITION AND LAYOUT

NOT TO SCALE

NOTES:

1. THE GRADUAL TRANSITION OF CONDUITS ENTERING THE JUNCTION BOX IS TO BE SUCH THAT THE CONDUIT ENDS REST ON THE STONES INSIDE THE JUNCTION BOX.
2. THE TRANSITION MUST PROVIDE FOR SUFFICIENT DRAINAGE TO ENSURE THAT WATER DOES NOT GET TRAPPED IN THE CONDUITS.
3. BACKFILL THE TRENCH WITHIN THE SAME DAY.
4. TRANSITION LAYOUT FOR ITS CONDUITS LEADING TO JUNCTION BOXES ITS TYPE C AND D IS TO BE SIMILAR.

ITS-704-04

NEW JERSEY DEPARTMENT OF TRANSPORTATION

ITS DETAILS

TYPICAL UNDERGROUND ITS CONDUIT TRANSITION AND LAYOUT

NJDOT Design Services
BDC-11D-03 MISC. CHANGES
BDC-07D-03 - ORIGINAL SHEET
pen table=
scale=
date=
ID=
file=

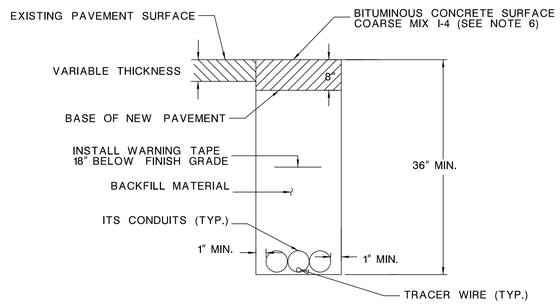

IN BITUMINOUS SHOULDER, TRAVELED WAY OR RAMP AREA

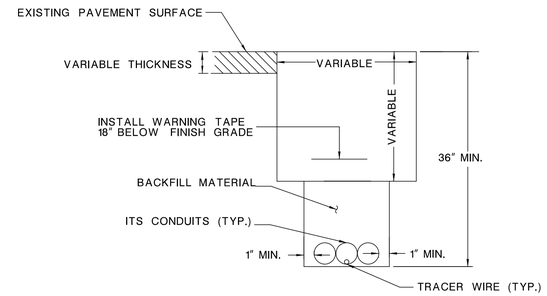

IN REHABILITATED/RECONSTRUCTED CONCRETE SHOULDER OR BITUMINOUS SHOULDER, TRAVELED WAY OR RAMP AREA

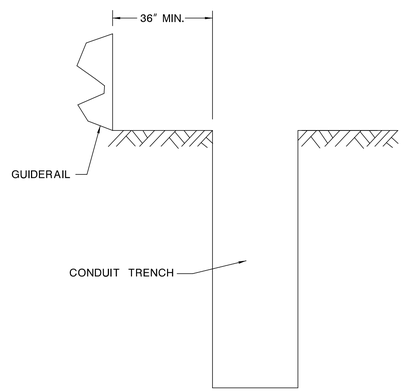

CONDUIT TRENCH OFFSET FROM EXISTING AND PROPOSED GUIDERAIL

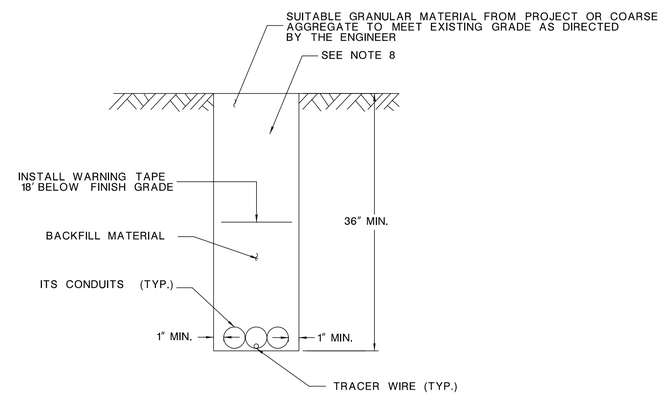

IN GRASS AREA

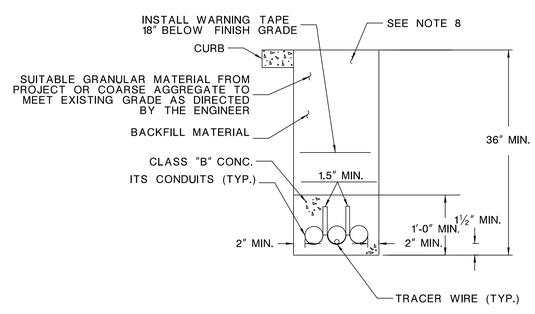

BEHIND THE CURB

NOTES:

1. BEFORE BACKFILLING TRENCH, REMOVE ALL CUT DEBRIS FROM SITE.
2. PREPARE THE TRENCH BOTTOM FOR ITS CONDUITS TO ELIMINATE LUMPS, RIDGES, JAGGED EDGES AND HOLLOWS, UTILIZING CLASS C BEDDING MATERIALS.
3. CENTER THE ITS CONDUITS IN THE TRENCH AND HOLD FIRMLY IN PLACE WHILE THE TRENCH IS BACKFILLED.
4. ENSURE THE BACKFILL MATERIAL IS CLASS C BEDDING 2' ABOVE THE TOP OF CONDUIT OR TO THE BOTTOM OF THE PAVEMENT BOX.
5. COMPACT THE BACKFILL MATERIAL IN EQUAL LIFTS TO A MAXIMUM OF 6" EACH WITH A MODIFIED VIBRATORY PLATE COMPACTOR. (MINIMUM THREE PASSES PER LIFT)
6. MOUND UP THE BITUMINOUS CONCRETE SURFACE COARSE MIX I-4 ABOVE THE EXISTING PAVEMENT SURFACE. AFTER THOROUGH COMPACTION ENSURE FINISH GRADE IS ⅛" ABOVE THE ADJACENT PAVEMENT SURFACE. COMPACT IN ACCORDANCE WITH SECTION 1003 (10 TON VIBRATORY ROLLER).
7. FOR WARNING TAPE DETAILS SEE FIBER OPTIC WARNING TAPE, MARKER & TAG DETAIL.
8. AFTER MATERIAL IS BACKFILLED, SEED AND MULCH IN ACCORDANCE WITH DIVISION 800.
9. WHEN THERE IS A CONCRETE SHOULDER, SAW CUT AND REMOVE THE CONCRETE MATERIAL BACK TO THE CURB, UTILIZING A TRENCHING MACHINE TO MAKE THE TRENCH. ENSURE REPLACEMENT MATERIAL COMPLIES WITH NOTE 11.
10. WHEN THERE IS A CONCRETE SHOULDER WITH BITUMINOUS OVERLAY, REPLACE WITH 8" MINIMUM BITUMINOUS MATERIAL OR MATCH EXISTING SECTION. (SEE NOTE 6)
11. ENSURE QUICK SETTING CONCRETE IS TYPE 1A AND COMPLIES WITH SECTION 903.07. FOR CONCRETE REPLACEMENT ENSURE THE THICKNESS OF THE QUICK SETTING CONCRETE IS THE SAME AS THE EXISTING. REPLACE EXPANSION JOINTS AND DOWELS IN KIND AND INSTALL LONGITUDINAL JOINT TIES IN ACCORDANCE WITH THE STANDARD CONSTRUCTION DETAILS. CONTRACTOR IS TO SUPPLY THE ENGINEER WITH DETAILED DRAWINGS FOR APPROVAL PRIOR TO CONSTRUCTION.
12. INSTALL ONE #14 AWG CONDUCTOR TYPE THHW/THWN IN THE MIDDLE CONDUIT PER TRENCH.
13. UNLESS OTHERWISE SPECIFIED, EACH ITS CONDUIT IS 2" IN DIAMETER (I.D.) MEETING ALL CONDUIT REQUIREMENTS FOR FNMC (HDPE).
14. PRIOR TO TERMINATION, ENSURE THE ITS CONDUITS NORMALIZES A MINIMUM OF 24 HOURS. ENSURE CONDUIT SLACK AND TERMINATIONS INSIDE THE JUNCTION BOX ARE IN ACCORDANCE WITH MANUFACTURER'S RECOMMENDATION FOR DISTANCES BETWEEN JUNCTION BOXES AND THE PROPER TEMPERATURE VARIATION TO ENSURE THE PROPER SLACK AND TERMINATION.
15. ENSURE THAT ONE OF ITS CONDUITS IS RED IN COLOR AND IS INSTALLED ON EITHER THE LEFT OR RIGHT SIDE OF THE TRENCH. THE REMAINING TWO ITS CONDUITS ARE TO BE ORANGE IN COLOR.

NOT TO SCALE

ITS-704-05

NEW JERSEY DEPARTMENT OF TRANSPORTATION

ITS DETAILS

ITS CONDUIT TYPE A

ITS CONDUIT, TYPE A

NJDOT Design Services

BDC-11D-03 MISC. CHANGES
BDC-07D-03 - ORIGINAL SHEET

pen table=
scale=
date=
ID=
file=

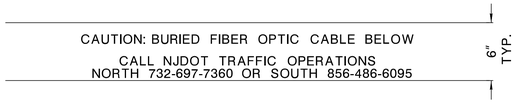

WARNING TAPE

(BLACK LETTERS ON ORANGE BACKGROUND)

NOTE:

1. PROVIDE WARNING TAPE TO BE ORANGE, 4 MIL. FLEXIBLE POLYETHYLENE FILM AND IS RESISTANT TO ACIDS, BASES, HYDROCARBONS AND WATER.

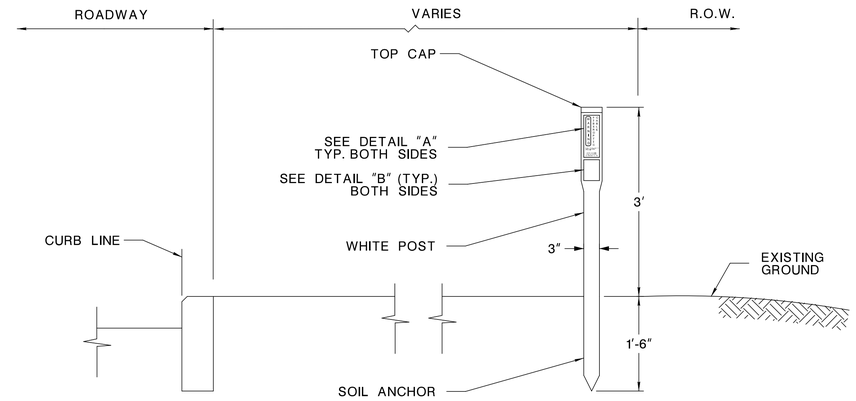

FIBER OPTIC CABLE MARKER
SPACE MARKERS 500′ APART

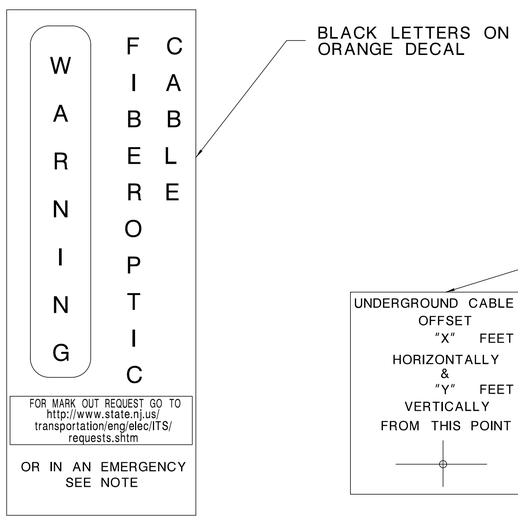

DETAIL "A"
3″x9″ WARNING DECAL

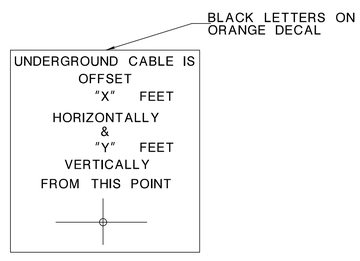

DETAIL "B"

3″x4″ WARNING DECAL

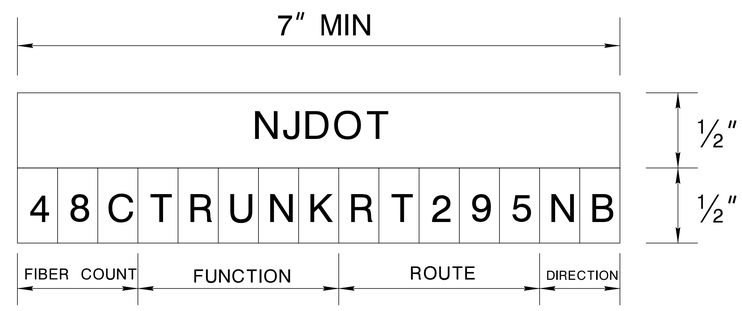

FUNCTION

TRUNK, DISTC, TERMC
CCTV
WIM
DMS
TAG RD
TRFSG
WTHST

FIBER OPTIC CABLE TAG

NOT TO SCALE

NOTE: Contact MSE for appropriate telephone number to be listed here.

FIBER OPTIC WARNING TAPE, MARKER AND TAG

ITS-704-06

NEW JERSEY DEPARTMENT OF TRANSPORTATION

ITS DETAILS

FIBER OPTIC WARNING TAPE, MARKER AND TAG

NJDOT Design Services

BDC-*** CHANGED NORTH PHONE # WEB SITE & ADDED NOTE
BDC-11D-03 MISC. CHANGES
BDC07D-03 ORIGINAL SHEET

pen table=
scale=
date=
ID=
file=

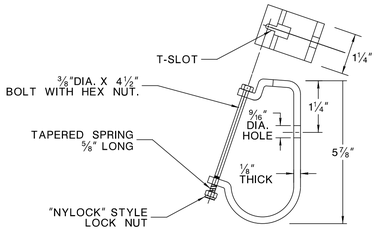

(6) CABLE BRACKETS (STAINLESS STEEL)

SECTION "A-A"

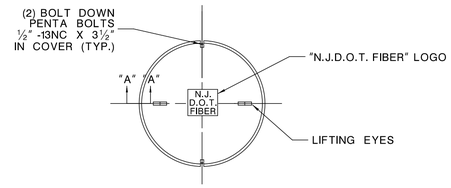

POLYMER CONCRETE COVER

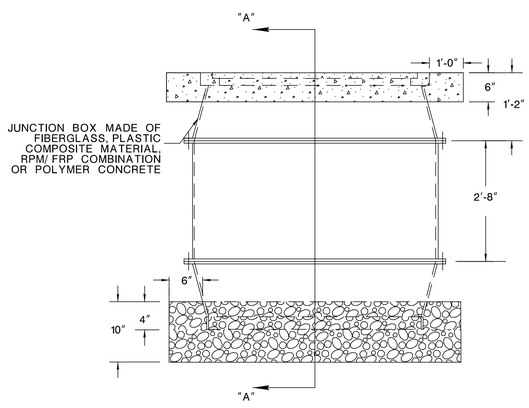

ELEVATION

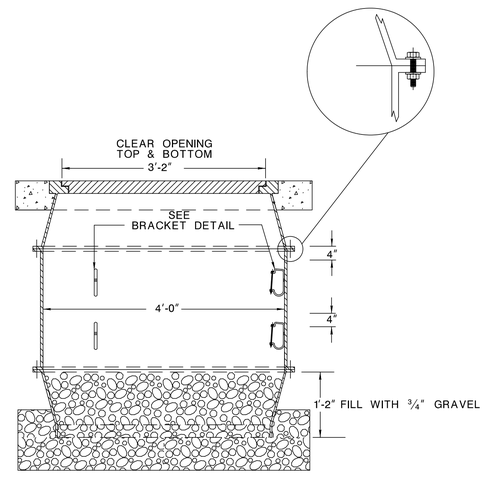

SECTION "A-A"

NOTES:

1. AS A MINIMUM, DESIGN THE BOX ASSEMBLY FOR TIER 22 LOADING AS SPECIFIED IN ANSI / SCTE 77 2002 "SPECIFICATION FOR UNDERGROUND ENCLOSURE INTEGRITY".
2. PROVIDE CERTIFICATION BY A PROFESSIONAL ENGINEER AND INCLUDE TEST RESULTS SHOWING THAT THE JUNCTION BOX AND COVER DESIGN MEETS THE LOADING REQUIREMENT.
3. DESIGN THE JUNCTION BOX WITH A MINIMUM SAFETY FACTOR OF 2.0 FOR WHEEL LOADS AND 2.0 FOR SOIL LOADS, SO THAT THE COVER DEFLECTION AT DESIGN LOADS DOES NOT EXCEED 0.5 INCHES AND SIDE WALL DEFLECTION DOES NOT EXCEEED 0.25 INCHES PER FOOT OF HEIGHT OF BOX. PERFORM TESTING ACCORDING TO CURRENT WESTERN UNDERGROUND COMMITTEE GUIDE NO. 3.6 NON-CONCRETE ENCLOSURE.
4. ENSURE ANY POINT ON THE COVER OR BOX WITHSTANDS A 70 FT. LBS. IMPACT ADMINISTERED WITH A C-TUP ACCORDING TO ASTM D-2444.
5. ENSURE THE MATERIALS UTILIZED IN THE MANUFACTURE OF JUNCTION BOXES AND COVERS ARE RESISTANT TO CHEMICALS COMMONLY FOUND IN THE SOIL OR IN THE OPERATING ENVIRONMENT, AND THEY ARE ALSO RESISTANT TO SUNLIGHT, UV AND ANY CLIMATIC CONDITIONS IN ACCORDANCE WITH ASTM G53, -40°F TO +140°F. DETERMINE CHEMICAL RESISTANCE PROPERTIES USING ASTM D543 AND ASTM D570 FOR WATER ABSORPTION.
6. ENSURE THE MATERIALS ARE RESISTANT TO DIRECT FLAME AND HEAT IN ACCORDANCE WITH ASTM D635.
7. ENSURE ALL HARDWARE IS STAINLESS STEEL.
8. MOUNT THREE PAIRS OF CABLE BRACKETS AT 120 DEGREES APART.
9. FASTEN EACH CABLE BRACKET WITH A ½" DIA. X 1½" LONG BOLT AND (1) HEX NUT, (2) FLAT WASHERS.
10. FACTORY ASSEMBLE THE JUNCTION BOX AND USE SILICON CAULKING FOR ALL FLANGE JOINTS.
11. ENSURE THE COVER SURFACE IS SKID RESISTANT WITH A COEFFICIENT OF FRICTION OF AT LEAST 0.5.
12. PERMANENTLY MOLD IDENTIFICATION OF THE COVER ON THE TOP SURFACE WITH "N.J.D.O.T. FIBER".
13. ENSURE THE COLOR OF THE COVER AND THE PART OF THE BOX THAT REMAINS VISIBLE AFTER INSTALLATION IS "CONCRETE GREY".
14. SET THE TOP OF THE POLYMER CONCRETE COVER FLUSH WITH THE TOP OF THE JUNCTION BOX AT GRADE.
15. PROVIDE AND INSTALL CONCRETE LOCK-IN FEATURE AROUND THE TOP OF THE BOX.
16. LIMIT THE GAP FROM THE EDGE OF THE COVER TO THE INSIDE EDGE OF THE BOX TO A MAXIMUM OF ⅛" +/- ⅛".
17. AS AN ALTERNATE, A SINGLE SECTION OR TWO SECTION JUNCTION BOX MAY BE SUPPLIED.
18. VIBRATE AND COMPACT SOIL THOROUGHLY AROUND ENTIRE JB UP TO GRADE PER SECTION 203.03.02D OF NJDOT STANDARD SPECIFICATION FOR ROAD AND BRIDGE CONSTRUCTION 2007.
19. TERMINATE RIGID NON-METALLIC CONDUITS WITH BELL END FLUSH WITH THE INSIDE WALL OF THE JUNCTION BOX.
20. TERMINATE FLEXIBLE NON-METALLIC CONDUIT IN ACCORDANCE WITH THE CONTRACT DOCUMENTS AND MANUFACTURER'S REQUIREMENTS. LAY FNMC ON THE GRAVEL/BROKEN STONE IN JB. EXTEND CONDUIT ENDS 4" PAST THE INSIDE WALL OF THE JB.
21. ENSURE CONDUITS ENTER INTO THE JUNCTION BOX PERPENDICULAR TO WALLS OR AS APPROVED BY THE RE.
22. INSTALL A CONCRETE COLLAR AROUND THE TOP OF THE JUNCTION BOX OF CLASS "C" CONCRETE 6" THICK.
23. FIELD DRILL ALL CONDUIT ENTRANCES INTO THE JUNCTION BOX WITH A HOLE SAW, OR PUNCH OUT USING A HYDRAULIC HOLE PUNCH, UNLESS OTHERWISE DIRECTED BY THE RE.
24. SAND ALL CONDUIT OPENINGS. AFTER THE CONDUITS ARE INSTALLED, SEAL ALL CONDUIT ENTRANCES WITH AN EPOXY OR SILICON CAULK.
25. PROVIDE AND INSTALL PROTECTIVE COVER WITH THE BOLT ASSEMBLY.
26. PROVIDE AND INSTALL COMPACTED ¾" GRAVEL OR BROKEN STONE.
27. PROVIDE AND INSTALL GROUNDING ROD (NOT SHOWN) AS PER NEC.

NOT TO SCALE

JUNCTION BOX ITS, TYPE A

DO NOT INSTALL THIS BOX IN THE TRAVEL WAY AND SHOULDERS.

ITS-704-07

NEW JERSEY DEPARTMENT OF TRANSPORTATION

ITS DETAILS

JUNCTION BOX ITS TYPE A

NJDOT Design Services

BDC-11D-03: MISC. CHANGES
BDC-07D-03: ORIGINAL SHEET

pen table=
scale=
date=
ID=
file=

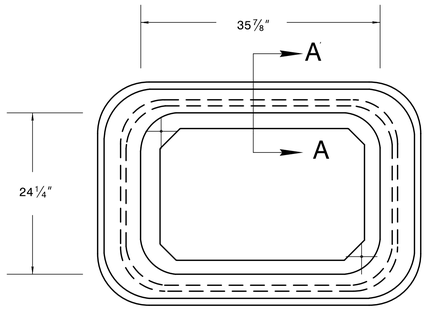

TOP VIEW (COVER NOT SHOWN)

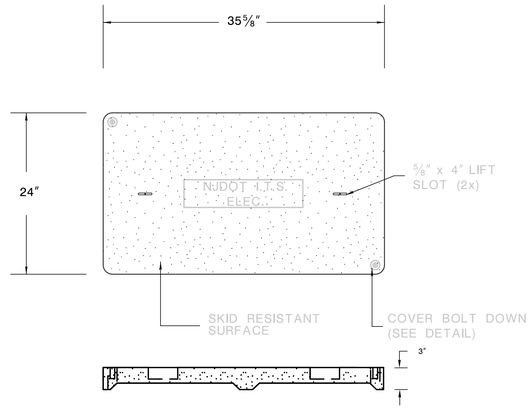

COVER

NOTES:

1. ENSURE THE COVER IS FASTENED TO THE BOX WITH TWO ½" -13NC STAINLESS STEEL HEX BOLTS, LOCATED AT OPPOSITE CORNERS OF THE COVER. BOLTS TO BE CAPTIVE TO LID.
2. ENSURE THE COVER SURFACE IS SKID RESISTANT WITH A COEFFICIENT OF FRICTION OF AT LEAST 0.5.
3. ENSURE THE DESIGN AND FABRICATION OF THE BOX AND COVER CONFORMS TO ALL ASPECTS OF ANSI/SCTE 77. ENSURE LOADING IS ENSURE THE LOADING TIER 15.
4. ENSURE THE JUNCTION BOX IS MADE OF FIBER POLYMER CONCRETE. ENSURE THE COVER IS MADE OF FIBER GLASS REINFORCED POLYMER CONCRETE.
5. ENSURE THE COLOR OF THE COVER AND ANY PART OF THE BOX VISIBLE WHEN IT IS INSTALLED, IS "CONCRETE GREY."
6. ENSURE THE IDENTIFICATION OF THE COVER IS PERMANENTLY MOLDED ON THE TOP SURFACE WITH "NJDOT ITS".
7. UNLESS OTHERWISE DIRECTED BY THE ENGINEER ALL CONDUIT ENTRANCES INTO THE JUNCTION BOX ARE TO BE FIELD DRILLED WITH A HOLE SAW OR PUNCHED OUT USING A HYDRAULIC HOLE PUNCH.
8. ALL CONDUIT OPENINGS MUST BE SANDED. AFTER THE CONDUITS ARE INSTALLED, ALL CONDUIT ENTRANCES MUST BE SEALED WITH AN EPOXY PUTTY OR SILICON CAULK.
9. IN GRASS OR DIRT AREAS, A CONCRETE PAD, CLASS "C", MUST BE POURED AROUND THE TOP OF THE JUNCTION BOX.
10. COMPACTED ¾" GRAVEL OR BROKEN STONE IS REQUIRED BELOW THE BOX. SUPPLY AN ADDITIONAL SIX (6) INCHES OF TIGHTLY COMPACTED ¾" CLEAN STONE PLACED IN BOTTOM OF BOX.
11. PROVIDE A CONCRETE LOCK-IN FEATURE AT THE TOP OF THE BOX. ACTUAL DESIGN CAN VARY PER MANUFACTURER.
12. ENSURE THE GAP FROM THE EDGE OF THE COVER TO THE INSIDE EDGE OF THE BOX IS A MAXIMUM OF ⅛" +/- 1/16".
13. ENSURE THE TOP OF THE POLYMER CONCRETE COVER IS SET FLUSH WITH THE TOP OF THE JUNCTION BOX.
14. PROVIDE EMBOSSED CERTIFICATION BY A PROFESSIONAL ENGINEER OF TEST RESULTS SHOWING THAT THE JUNCTION BOX AND COVER MEET THE DESIGN SPECIFIED LOADING REQUIREMENTS.
15. UTILIZE BOX EXTENSION TO PROVIDE REQUIRED DEPTH.
16. SUPPLY BOX WITH CABLE RACK SYSTEMS AFFIXED TO BOTH LONG SIDES OF THE BOX FOR STORAGE OF CABLE SLACK.
17. THE BOX MUST MEET REQUIREMENTS OF NEC ARTICLE 314.
18. ALL EXPOSED HARDWARE TO BE STAINLESS STEEL.
19. DIMENSIONS ARE TYPICAL. ENSURE CUT SHEETS ARE SUBMITTED FOR APPROVAL FOR THE EXACT BOX TO BE UTILIZED. THE BOX IS TO HAVE AN OPEN BOTTOM.

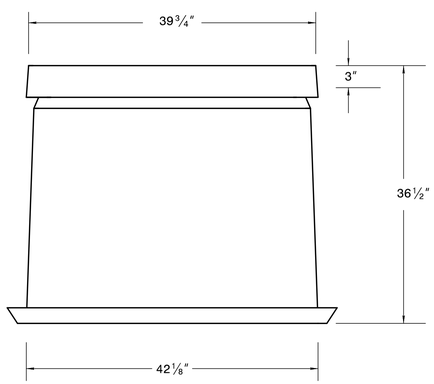

ELEVATION

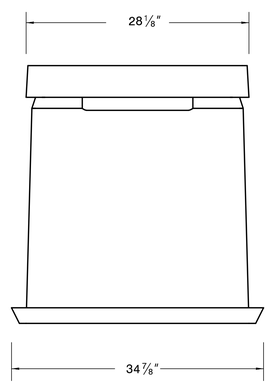

SIDE VIEW

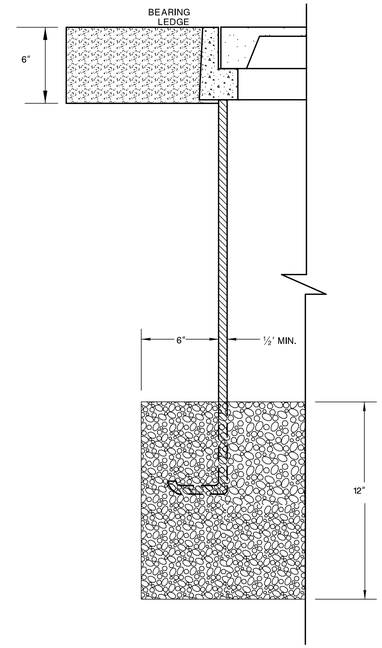

SECTION A-A

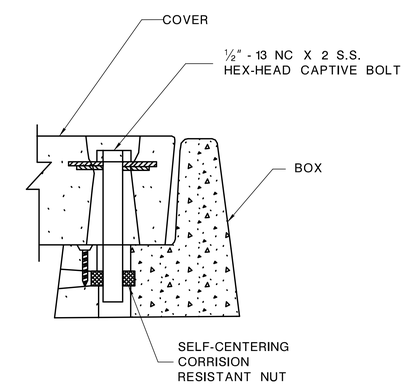

COVER BOLT DOWN DETAIL

•

NOT TO SCALE

ITS-704-09

NEW JERSEY DEPARTMENT OF TRANSPORTATION

ITS DETAILS

JUNCTION BOX ITS TYPE C

NJDOT Design Services

BDC-11D-03- ORIGINAL SHEET

pen table=
scale=
date=
ID=
file=

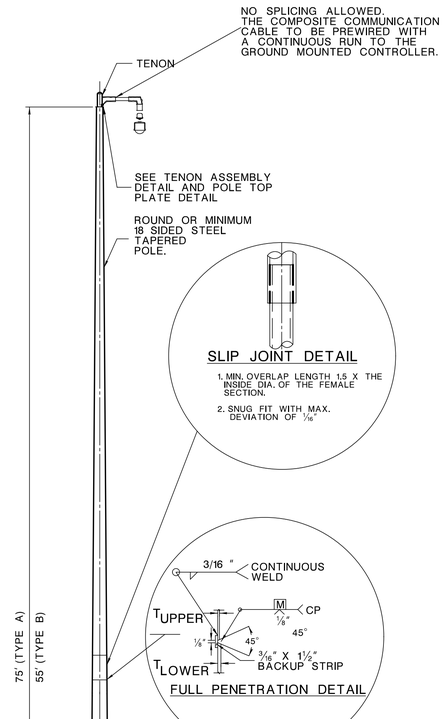

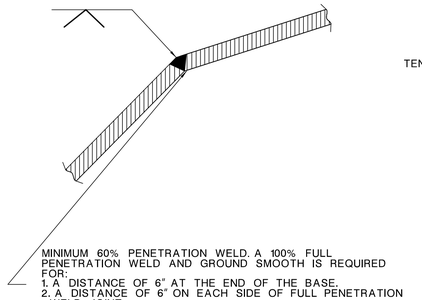

TYPICAL LONGITUDINAL SEAM WELD

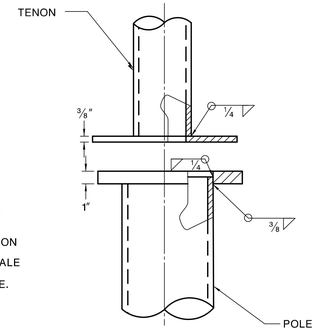

POLE TOP / TENON PLATES DETAIL

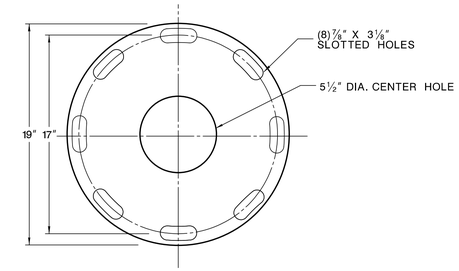

TENON PLATE

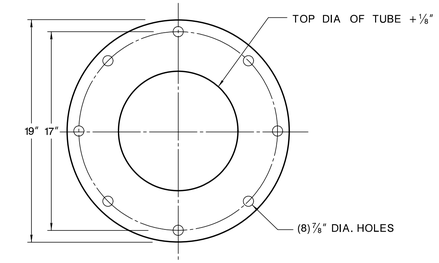

POLE TOP PLATE

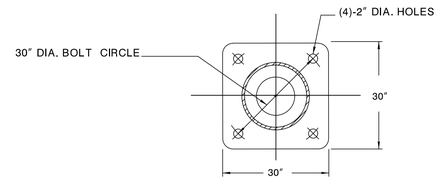

SECTION A-A (BASE PLATE)
(BOLTS NOT SHOWN)

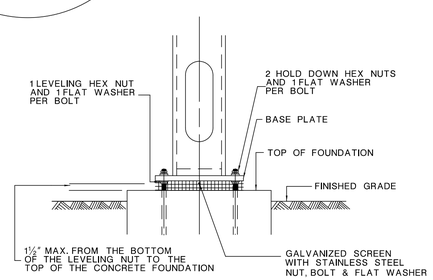

SKETCH "A"

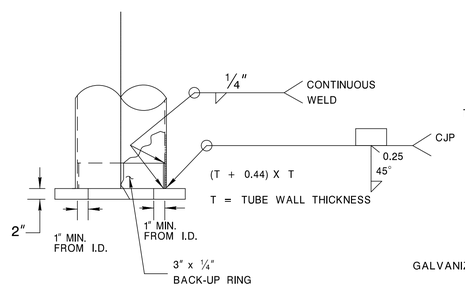

BASE PLATE

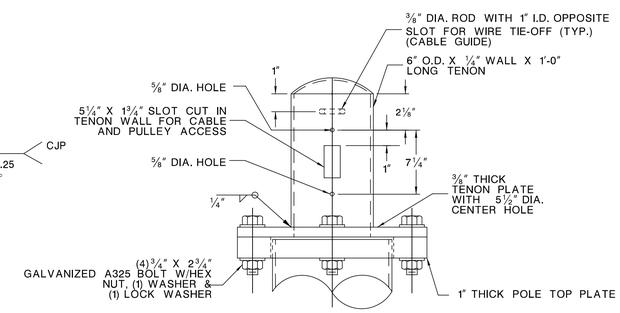

TENON ASSEMBLY DETAIL

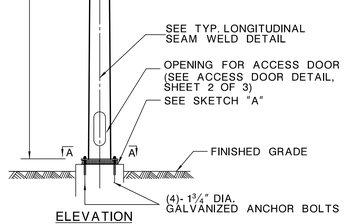

ELEVATION

CAMERA STANDARD TYPE A, B

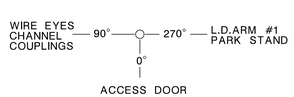

ORIENTATION VIEW

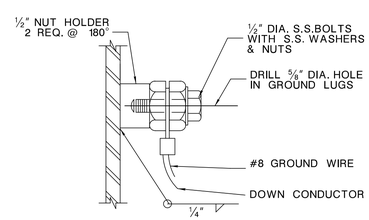

GROUND LUGS DETAIL

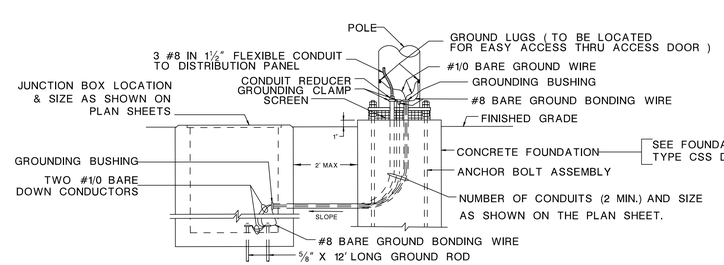

LIGHTNING & BONDING DETAIL

DESIGN SPECIFICATIONS:

UTILIZE 2009 AASHTO STANDARD SPECIFICATIONS FOR STRUCTURAL SUPPORT FOR HIGHWAY SIGNS, LUMINAIRES AND TRAFFIC SIGNALS WITH THE LATEST INTERIM.

DESIGN WIND VELOCITY 80 M.P.H. (APPENDIX C)
DESIGN ICE LOAD 3 P.S.F.
FATIGUE CATEGORY 2
DESIGN LIFE 50 YEARS

ENSURE ALL LOADS APPLIED TO ALL MEMBERS HAVE BEEN TAKEN INTO ACCOUNT FOR STRENGTH DESIGN, AND ALL WELDED STRUCTURAL DETAILS HAVE BEEN ANALYZED AGAINST FATIGUE. THE DESIGN ANALYSIS IS NOT LIMITED TO POLE, BUT OTHER COMPONENTS LIKE ACCESS DOOR, TENON, LOWERING DEVICE, WINCH ASSEMBLY, BASE PLATE, POLE-TO-BASE CONNECTION, ANCHOR BOLTS EMBEDMENT, ETC., MUST ALSO BE CONSIDERED.

ENSURE MAXIMUM HORIZONTAL DEFLECTION AT THE TOP OF THE POLE COMPLETELY ASSEMBLED WITH CCTV CAMERA AND ALL FIXTURES ATTACHED DOES NOT EXCEED 2 INCHES FROM THE CENTER LINE DUE TO A 40 MPH (GUST FACTOR 1.3) WIND SPEED (APPENDIX C WIND PRESSURE FORMULA)

SUBMIT DETAIL PLANS AND DESIGN CALCULATIONS OF CAMERA STANDARD POLES WITH CAMERA SHOWING STRENGTH, FATIGUE AND DEFLECTION CHECKS, SHOW CAMERA ASSEMBLY WEIGHT, INCLUDING LOWERING DEVICE AND EFFECTIVE PROJECTED AREA (EPA). ENSURE THE DESIGN CALCULATIONS AND WORKING DRAWINGS ARE SIGNED AND SEALED BY A PROFESSIONAL ENGINEER.

MATERIALS:

ENSURE THE POLE MATERIAL CONFORMS TO ASTM SPECIFICATIONS A595,GRADE A (MIN. YIELD POINT 55 KSI) OR GRADE B (MIN. YIELD POINT 60 KSI). TENON MATERIAL CONFIRMS TO ASTM A53, GRADE B (MIN. YIELD POINT 35 KSI). THE POLE TAPER TO BE 0.14 IN./FT. MAX. TWO SEGMENTS MUST BE THE SAME MATERIAL. AS AN ALTERNATE THE POLE (18 SIDED MIN.) AND TENON MAY BE FORMED FROM STEEL CONFORMING TO ASTM A572 GRADE 55 OR GRADE 60. ALL OTHER STEEL CONFORMS TO ASTM SPECIFICATION A709(AASTHO M270) GRADE 36 OR GRADE 50. ENSURE ALL POLES REGARDLESS OF THICKNESS AND ALL OTHER STEEL PLATES GREATER THAN 1/2" THICKNESS MEET THE AASHTO REQUIREMENTS FOR NOTCH TOUGHNESS (CHARPY TESTING) ZONE 2. GALVANIZE BOTH UNITS OF THE POLE AND TENON PER ASTM A123 AFTER FABRICATION.

PROCURE BOLTS/ANCHOR BOLTS, NUTS AND WASHERS AS A PACKAGE FROM THE MANUFACTURER.

ENSURE ANCHOR BOLT MATERIALS CONFORM TO ASTM F1554, GRADE 55. GALVANIZE THE ANCHOR BOLTS PER ASTM A153 CLASS C AFTER THREADING FOR THE FULL LENGTH OF THE BOLT, AS WELL AS NUTS AND WASHERS.

HIGH STRENGTH BOLTS, NUTS AND WASHERS TO BE GALVANIZED PER ASTM A153 CLASS C.

PROVIDE STAINLESS STEEL FASTENERS (INCLUDING BOLTS, NUTS AND WASHERS) CONFORMING TO CURRENT ASTM A320, GRADE B8 CLASS 2 (AISI TYPE 304) AND STRAIN HARDENED. ALTERNATE MATERIALS PROPOSED TO BE USED FOR FASTNERS MUST BE PRE-APPROVED SEPERATELY PRIOR TO SUBMISSION OF WORKING DRAWINGS.

ALL CONCRETE TO BE "CLASS B" AS DEFINED IN THE NJDOT STANDARD SPECIFICATIONS.

NOTES:

1. ENSURE STEEL POLE CONSISTS OF A MAXIMUM OF TWO STEEL SECTIONS.THE LOWER SECTION TO BE A MIN. OF 40 FT AND MAXIMUM OF 50' LONG WITH A MIN. THICKNESS OF 1/4" WITH ONLY ONE LONGITUDINAL SEAM WELD. IF THE POLE DIA. IS GREATER THAN 24 INCHES, TWO LONGITUDINAL SEAM WELDS WILL BE PERMITTED. EITHER SLIP JOINTS OR FULL PENETRATION WELD JOINTS ARE ACCEPTABLE. SEE SLIP JOINT AND FULL PENETRATION DETAILS. LAMINATED TUBES ARE NOT PERMITTED. SEE TYPICAL LONGITUDINAL SEAM WELD DETAIL.
2. ENSURE THAT THE POLE DIAMETER IS SUFFICIENT TO ACCOMMODATE THE WINCH / MOTOR ASSEMBLY COMPLETELY INSIDE THE POLE.
3. PROVIDE NEOPRENE DOOR GASKET CEMENTED TO DOOR.
4. PROVIDE A GALVANIZED SCREEN, WRAPPED AROUND THE BASE OF POLE.
5. ENSURE THE GALVANIZED SCREEN HAS NO MORE THAN 1/2" OPENINGS AND IS HELD TOGETHER WITH STAINLESS STEEL NUT, BOLT AND FLAT WASHER.
6. DO NOT GROUT UNDER THE POLE .
7. PROVIDE ONE (1) LEVELING HEX NUT, TWO (2) HOLD DOWN HEX NUTS AND TWO (2) FLAT WASHERS PER ANCHOR BOLT. (SEE SKETCH A) DETERMINE THE PROPER LENGTH OF THE ANCHOR BOLT FOR PROJECTION AND EMBEDMENT. THE CLEARANCE BETWEEN THE TOP OF THE FOUNDATION AND THE BOTTOM OF THE LEVELING NUT NOT TO EXCEED 1 1/2". THE PROJECTION LENGTH TO BE A MINIMUM OF 9".
8. ENSURE WELDING CONFORMS TO THE ANSI/AWS D1.1 STRUCTURAL WELDING CODE-STEEL, WITH NJDOT AMENDMENTS IN NJDOT STANDARD SPECIFICATIONS. ENSURE WELDING INSPECTION AND FULL PENETRATION WELD NONDESTRUCTIVE TESTING CONFORM TO AWS D1.1. UNLESS OTHERWISE SPECIFIED.
9. LOCATE TOP, CENTER AND BOTTOM ELECTRICAL CABLE GUIDES WITHIN THE POLE AND ALIGN WITH EACH OTHER. POSITION THE BOTTOM CABLE GUIDE 2 INCHES BELOW THE BOTTOM OF THE ACCESS DOOR AND THE TOP CABLE GUIDE 1 INCH DIRECTLY BELOW THE TOP OF TENON. POSITION TWO PARKING STANDS A MAXIMUM OF 2 1/4" INCHES BELOW THE TOP OF THE ACCESS DOOR AND LOCATED AT 90° AND 270° FROM THE ACCESS DOOR. ENSURE EACH CABLE GUIDE IS 3/4" WIRE EYE BOLT HAVING 1" INTERNAL DIA. FOR WIRE TIE OFF.
10. ENSURE THE TIGHTENING PROCEDURE FOR ANCHOR BOLTS CONFORMS WITH SECTION 6.9 OF THE 2005 FHWA " GUIDELINES FOR THE INSTALLATION, INSPECTION, MAINTENANCE AND REPAIR OF STRUCTURAL SUPPORTS FOR HIGHWAY SIGNS, LUMINAIRES AND TRAFFIC SIGNALS".

NOT TO SCALE

ITS-704-11

NEW JERSEY DEPARTMENT OF TRANSPORTATION

ITS DETAILS

CAMERA SURVEILLANCE SYSTEM
CAMERA STANDARD TYPE A & B

SHEET 1 OF 3

ID=	date=	scale=	pen table=
NJDOT Design Services	BDC-11D-03 MISC. CHANGES BDC-07D-03- ORIGINAL SHEET		

file=

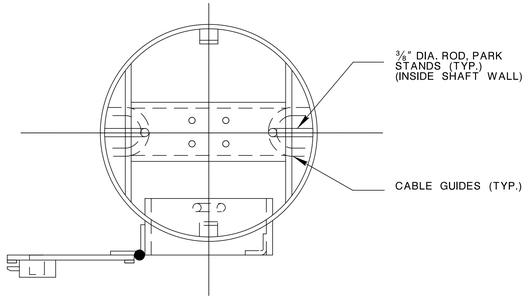

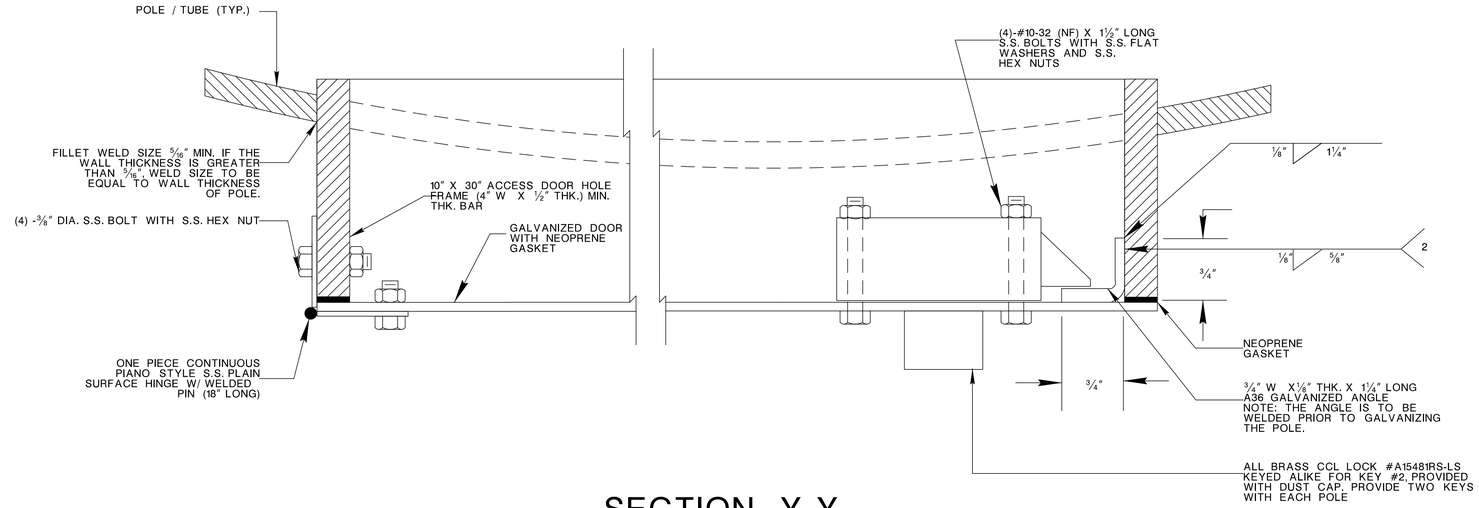

SECTION Y-Y

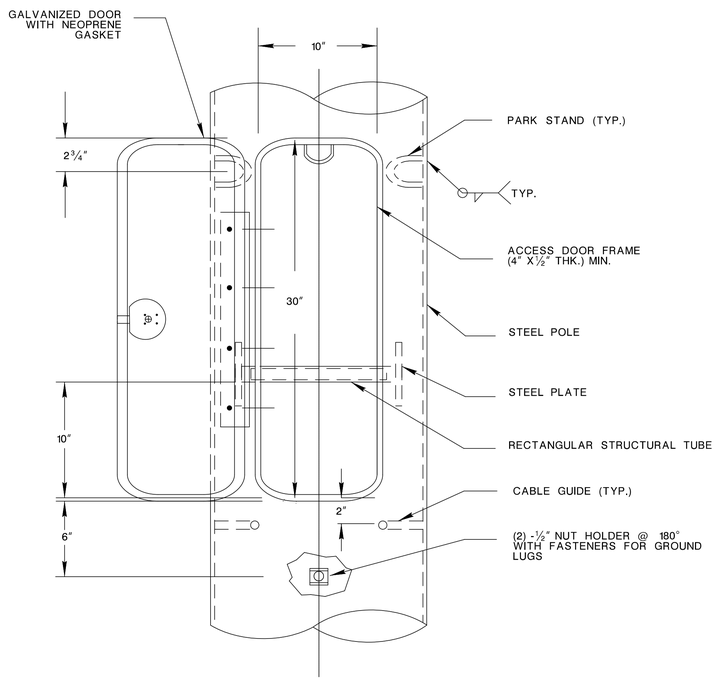

ACCESS DOOR DETAIL
(10" X 30" CLEAR OPENING)

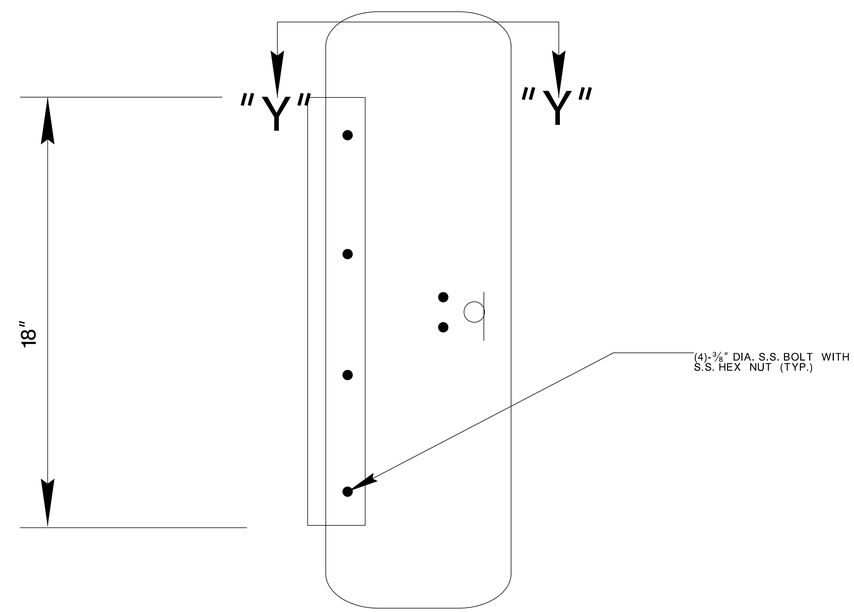

ACCESS DOOR COVER DETAIL
(FACTORY ASSEMBLED, TUBE & FRAME NOT SHOWN)

NOT TO SCALE

ITS-704-12

NEW JERSEY DEPARTMENT OF TRANSPORTATION

ITS DETAILS

CAMERA SURVEILLANCE SYSTEM
CAMERA STANDARD TYPE A & B

SHEET 2 OF 3

96

NJDOT Design Services

BDC-11D-03 MISC. CHANGES
BDC-07D-03 - ORIGINAL SHEET

pen table=
scale=
date=
ID=
file=

THE DIMENSIONS OF THE MOUNTING TUBE-PLATE ASSEMBLY AND WELD SIZE TO BE DETERMINED BY THE MANUFACTURER TO ENSURE THE ASSEMBLY CAN WITHSTAND ALL LOADS FROM WINCH/CAMERA LOWERING DEVICE SYSTEM.

WELD THE TWO PLATES OF THE ASSEMBLY INSIDE THE POLE PRIOR TO GALVANIZING. ENSURE NO CRACKING AT WELDS.

POSITION THE WINCH ASSEMBLY SO THAT THE WINCH SHAFT CAN ACCOMMODATE THE DRILL ADAPTER ASSEMBLY AND MANUAL HAND CRANK ASSEMBLY.

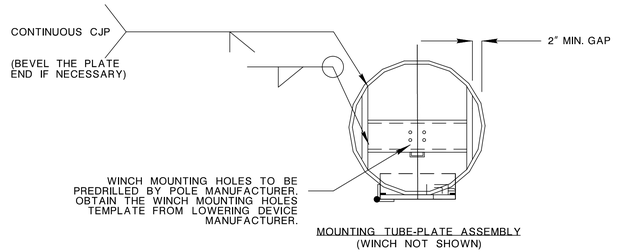

MOUNTING TUBE-PLATE ASSEMBLY
(WINCH NOT SHOWN)

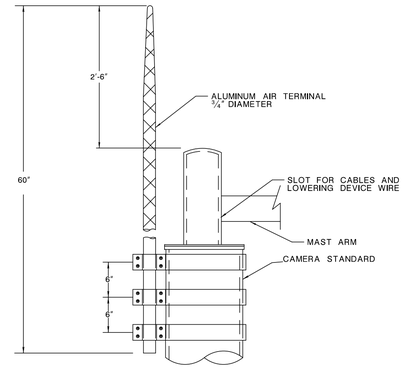

AIR TERMINAL

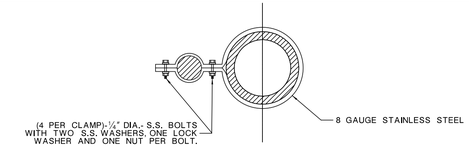

SECTION A-A

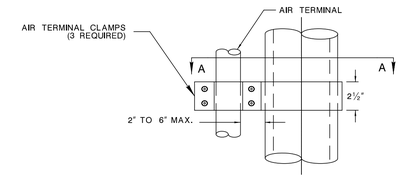

AIR TERMINAL CLAMP DETAIL

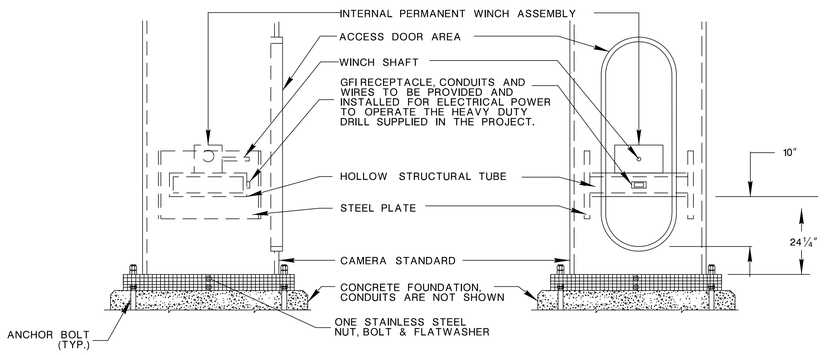

SIDE VIEW
(DOOR NOT SHOWN)

FRONT VIEW
(DOOR NOT SHOWN)

WINCH ASSEMBLY MOUNTING DETAIL

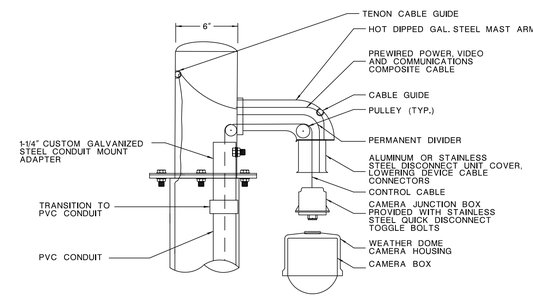

DOME CAMERA AND LOWERING DEVICE ASSEMBLY
(LINE DIAGRAM)

NOTES:

1. PROVIDE SEALED, SELF LUBRICATED BEARINGS, OIL TIGHT BRONZE BEARINGS OR SINTERED BRONZE BUSHINGS WITH ALL PULLEYS FOR THE CAMERA LOWERING DEVICE.
2. ENSURE THE LOWERING CABLE HAS A MINIMUM OF ⅛" DIAMETER STAINLESS STEEL AIRCRAFT CABLE WITH A MINIMUM BREAKING STRENGTH OF 1740 POUNDS WITH (7) STRANDS OF 19 WIRE EACH.
3. PROTECT ALL ELECTRICAL AND VIDEO COAXIAL CONNECTIONS BETWEEN THE FIXED AND LOWERABLE PORTION OF THE CONTACT BLOCK FROM EXPOSURE TO THE WEATHER WITH A WATERPROOF SEAL TO PREVENT DEGRADATION OF THE ELECTRICAL CONTACTS.
4. DESIGN THE ELECTRICAL CONNECTIONS BETWEEN THE FIXED AND MOVABLE LOWERING DEVICE COMPONENTS TO CONDUCT HIGH FREQUENCY DATA BITS AND ONE (1) VOLT PEAK-TO-PEAK VIDEO SIGNALS AS WELL AS THE POWER REQUIREMENTS FOR OPERATION OF DOME ENVIRONMENTAL CONTROLS.
5. PROVIDE INTERFACE AND LOCKING COMPONENTS MADE OF STAINLESS STEEL.
6. ENSURE THE SUSPENSION CONTACT UNIT HAS LOAD CAPACITY OF 600 LBS. WITH A MINIMUM OF 4 TO 1 SAFETY FACTOR.
7. SUPPLY DRILL ADAPTOR ASSEMBLY AND MANUAL HAND CRANK ASSEMBLY AS SHOWN.
8. INCLUDE INTERNAL PERMANENT WINCH ASSEMBLY AND GFI RECEPTACLE BOX MOUNTING DETAILS, IN THE WORKING DRAWINGS FOR APPROVAL.
9. DURING THE INSTALLATION OF THE FIRST CAMERA SURVEILLANCE SYSTEM IN THE PROJECT PROCURE ASSISTANCE FROM THE LOWERING DEVICE MANUFACTURER. THE FACTORY REPRESENTATIVE OF THE LOWERING DEVICE MANUFACTURER IS REQUIRED TO BE PRESENT DURING THE ASSEMBLY AND TESTING OF THE VERY FIRST LOWERING DEVICE AND WINCH ASSEMBLY ON THE CAMERA STANDARD. FOR SUBSEQUENT INSTALLATIONS WITHIN THE SAME PROJECT, IF A FACTORY REPRESENTATIVE OF THE LOWERING DEVICE MANUFACTURER IS NOT PROVIDED THEN A CERTIFICATION FROM THE LOWERING DEVICE MANUFACTURER WILL BE REQUIRED STATING THAT THE CONTRACTOR HAS BEEN INSTRUCTED AND TRAINED ON THE INSTALLATION, OPERATION AND SAFETY FEATURES OF THE LOWERING DEVICE AND WINCH ASSEMBLY.
10. ARRANGE FOR AND PROVIDE "ON SITE" OPERATIONAL INSTRUCTIONS AND TRAINING TO DOT-ITS MAINTENANCE PERSONNEL.

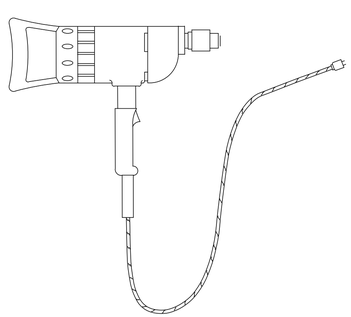

REVERSIBLE ½" HEAVY DUTY DRILL
WITH TORQUE LIMITED CLUTCH EQUIPPED

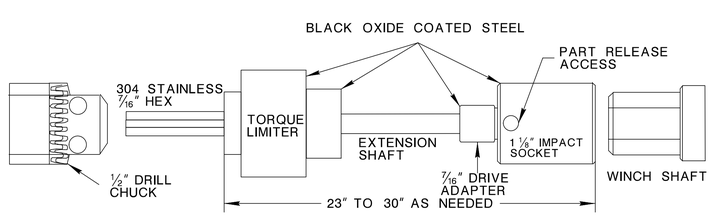

DRILL ADAPTER ASSEMBLY
(LINE DIAGRAM)

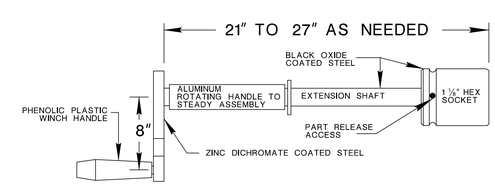

MANUAL HAND CRANK ASSEMBLY
(LINE DIAGRAM)

NOT TO SCALE

ITS-704-13

NEW JERSEY DEPARTMENT OF TRANSPORTATION

ITS DETAILS

CAMERA SURVEILLANCE SYSTEM
CAMERA STANDARD TYPE A & B

SHEET 3 OF 3

97

NJDOT Design Services

ID=	date=	scale=	pen table=
BDC-11D-03 MISC. CHANGES			
BDC-07D-03- ORIGINAL SHEET			

file=

FOUNDATION CSS

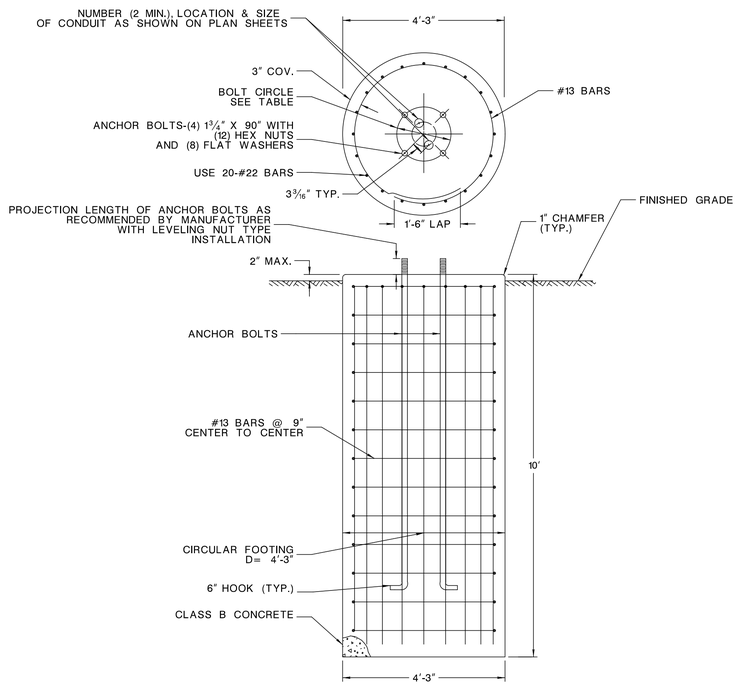

"BOLT CIRCLE TABLE"		
STANDARD TYPE	POLE HEIGHT	ANCHOR BOLT CIRCLE DIAMETER
A	75'	30"
B	55'	30"
C	40'	20"

NOTES:

1. HOT DIP GALVANIZE ANCHOR BOLTS PER ASTM A153 FOR THE FULL LENGTH OF THE BOLT AFTER THREADING.
2. PROCURE ANCHOR BOLTS MEETING ASTM F 1554 GRADE 55 STEEL FROM THE MANUFACTURER OF CAMERA STANDARD. ANCHOR BOLTS EMBEDMENT LENGTH, THREADED LENGTH AND PROJECTION LENGTH ARE TO BE DETERMINED AND PROVIDED BY THE MANUFACTURER.
3. LUBRICATE ANCHOR BOLT PROJECTION PORTION BEFORE MOUNTING THE POLE.
4. FOR ANCHOR BOLT TIGHTENING PROCEDURE SEE NOTE 10 ON CSS CAMERA STANDARD TYPE A AND B DETAIL, SHEET 1 OF 3 OR NOTE 8 ON CSS CAMERA STANDARD TYPE C DETAIL, SHEET 1 OF 2.
5. ALL BAR SIZES ARE DESIGNATED IN SOFT METRIC SIZES.

GENERAL DESIGN SPECIFICATIONS:

CONCRETE DESIGN STRESS:

SPECIFIED COMPRESSIVE STRENGTH (f'c) (CLASS B).....3,000 PSI
EXTREME FIBER COMPRESSIVE STRESS (fc).....1,200 PSI

REINFORCEMENT STEEL DESIGN STRESS:

YIELD STRENGTH (fy) (A615, GRADE 60).....60 KSI
TENSILE STRENGTH (ts).....90 KSI

NOT TO SCALE

ITS-704-16

NEW JERSEY DEPARTMENT OF TRANSPORTATION

ITS DETAILS

CAMERA SURVEILLANCE SYSTEM
FOUNDATION CSS

NJDOT Design Services
BDC-***-** REVISED NOTE No. 4
BDC-11D-03 MISC. CHANGES
BDC-07D-03 - ORIGINAL SHEET
pen table=
scale=
date=
ID=
file=

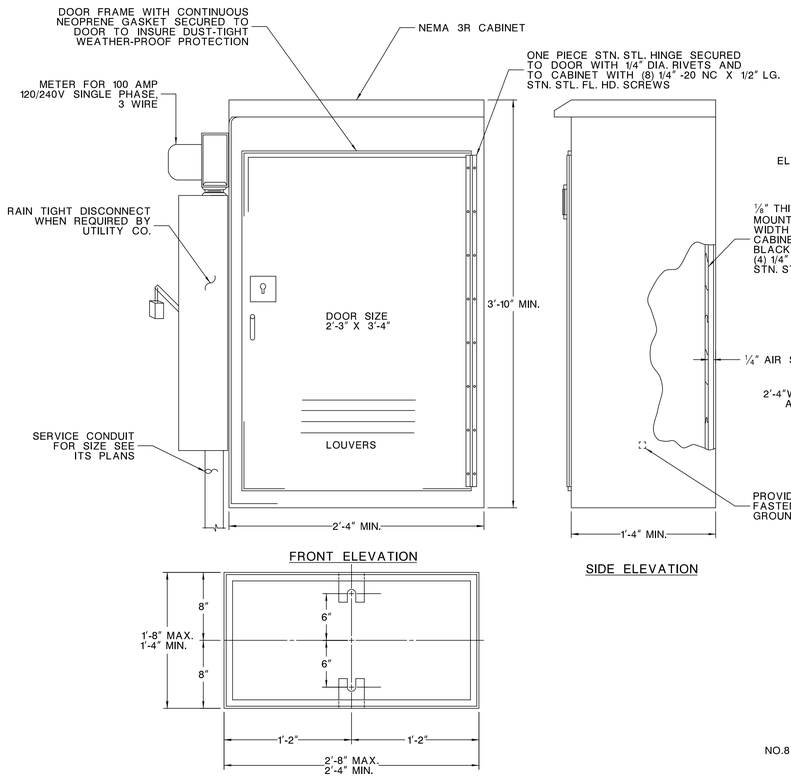

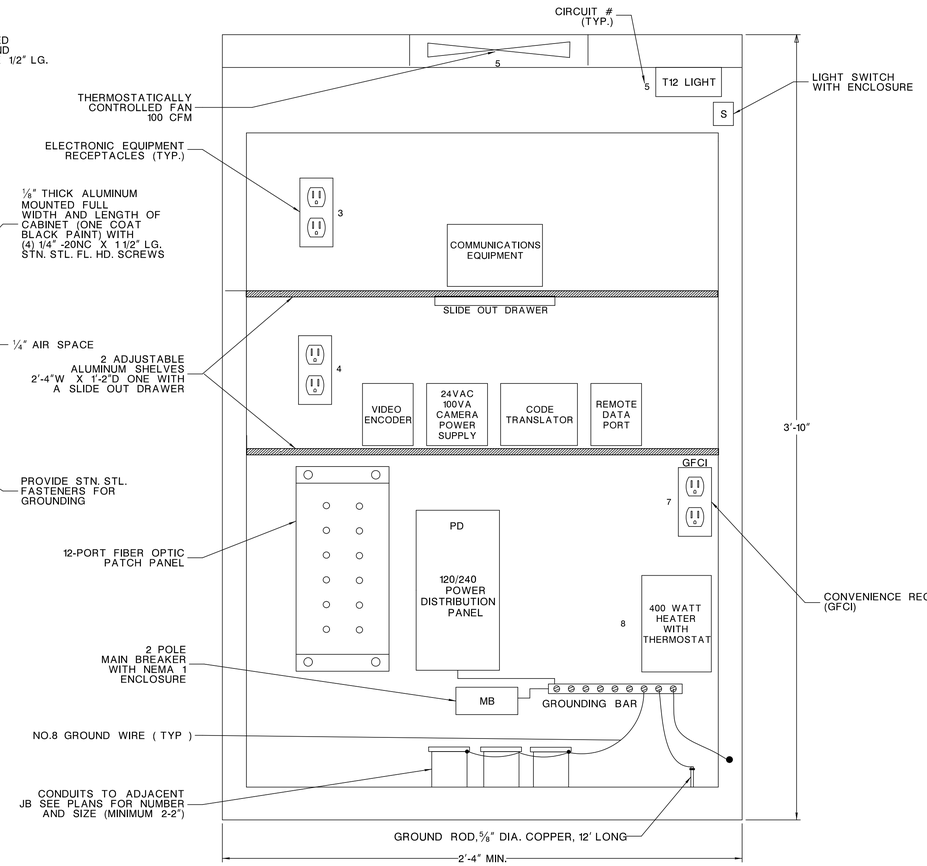

CABINET EQUIPMENT LAYOUT (TYP.)

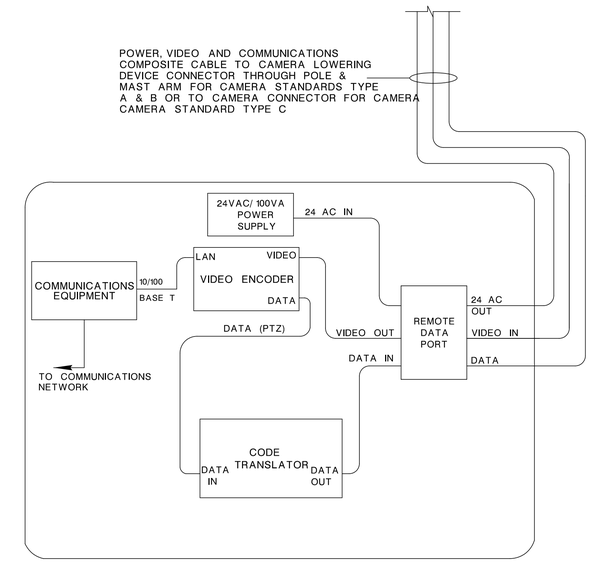

COMMUNICATIONS BLOCK DIAGRAM

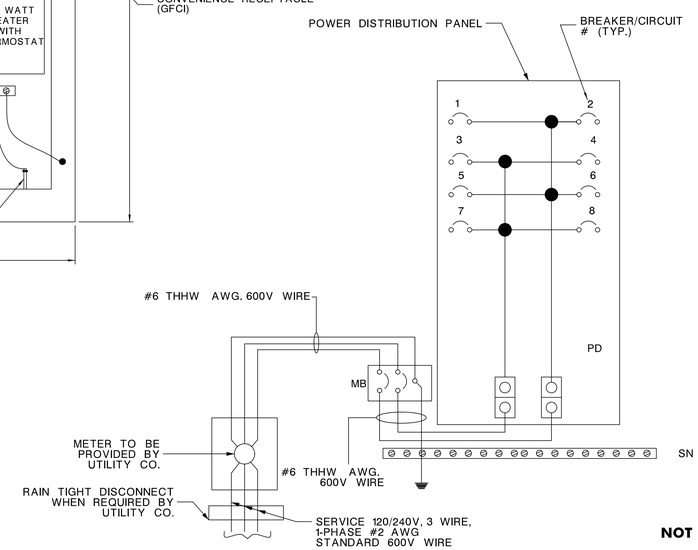

POWER DISTRIBUTION DIAGRAM

NOTES:

1. ENSURE CABINET AND CABINET DOOR IS FABRICATED FROM SHEET ALUMINUM 1/8" THICK, 5052-H32 ALLOY, UNPAINTED.
2. SUPPLY WITH EACH CABINET (2) ANCHOR BOLTS 3/4"- 10NC X 15" LG. STL. WITH GALVANIZED 3" COUPLING (2) STAINLESS STEEL 1 1/4" O.D. X 1/8" THK. FLAT WASHERS AND (2) 3/4" - 10NC X 3" LG. STAINLESS STEEL CAP SCR.
3. SECURE CABINET DOOR WITH A SUB-TREASURY LOCK NO. 0357S AND KEYPAD ALIKE FOR KEY NO. 5 AVAILABLE FROM THE AMERICAN HARDWARE CO. NEW BRITAIN, CONN., OR A TUMBLER LOCK NO. 15481 ARS AND KEYPAD ALIKE FOR NO. 2 AVAILABLE FROM CORBIN LOCK CO. NEW BRITAIN, CONN.
4. SECURE CABINET LOCK TO THE DOOR WITH #10 - 24 X 1 1/8" ROUND HEAD (STN. STL.) MACHINE SCREWS.
5. 120V EXPOSED WIRING IS NOT PERMITTED. ENCASE WIRING TO ENCLOSURES AND OUTLETS IN LIQUID TIGHT FLEXIBLE CONDUIT AND FITTINGS INSIDE THE CABINET.
6. ENSURE ALL EQUIPMENT IS UL & NEMA LISTED FOR OUTDOOR INSTALLATION INSIDE NEMA 3R CABINET.
7. LABEL ALL ELECTRICAL RECEPTACLES EXCEPT GFCI AS "ELECTRONIC EQUIPMENT ONLY". LABEL GFCI RECEPTACLE AS "CONVENIENCE RECEPTACLE".
8. FOR BREAKER RATINGS, SEE TABLE A.
9. PROVIDE SURGE SUPPRESSION TO THE DATA LINES.
10. METER, RAIN TIGHT DISCONNECT SWITCH AND SERVICE CONDUIT ARE NOT REQUIRED IF ELECTRIC SERVICE IS CONNECTED TO ANOTHER LOAD CENTER AND NOT TO UTILITY COMPANY POWER SOURCE.
11. WHERE REQUIRED, ENSURE METER PAN CONFORMS TO UTILITY COMPANY'S HEIGHT REQUIREMENTS.

TABLE A

	BREAKER RATING	
BREAKERS #	FUNCTION	TRIP RATING (AMPS)
MB	MAIN BREAKER 60 AMP	60
1	RECEPTACLE INSIDE CAMERA POLE BASE	15
2	SPARE	15
3	ELECTRONIC EQUIPMENT RECEPTACLE	15
4	ELECTRONIC EQUIPMENT RECEPTACLE	15
5	FAN & LIGHT	15
6	SPARE	15
7	CONVENIENCE RECEPTACLE (GFCI)	15
8	HEATER	20

NOT TO SCALE

ITS-704-17

NEW JERSEY DEPARTMENT OF TRANSPORTATION

ITS DETAILS

CAMERA SURVEILLANCE SYSTEM
CONTROLLER CAMERA

NJDOT Design Services

BDC-11D-03 MISC. CHANGES
BDC-07D-03 ORIGINAL SHEET

pen table=
scale=
date=
ID=
file=

NOTES

1. CABINET CONSTRUCTED OF FORMED ALUMINUM ALLOY 5052-H32 0.125 INCH THICK WELDED WHERE SHOWN.
2. CABINET IS NOT PAINTED.
3. ALL BOLTS TO BE VANDAL PROOF TYPE.
4. ANY VARIATIONS TO THE DIMENSIONS MUST BE APPROVED IN WRITING BY THE N.J.D.O.T. ENGINEER BEFORE FABRICATION.
5. NO CHANGES IN ANCHORAGE DIMENSIONS ARE PERMITTED.
6. IF METER IS NOT REQUIRED, INSTALL 1¼" I.D. SEALTITE FLEXIBLE CONDUIT AND 1¼" I.D. NIPPLE FROM REDUCER COUPLING TO MAIN BREAKER PANEL.
7. THE BASE OF THE CABINET TO BE ½" MINIMUM THICKNESS.
8. AS AN ALTERNATE A STAINLESS STEEL PIANO TYPE HINGE MAY BE UTILIZED.
9. IF REQUIRED BY UTILITY COMPANY, PROVIDE SERVICE DISCONNECT SWITCH WITH 240 VOLT, 100 A RATED, S/N, NEMA 3R ENCLOSURE AND PADLOCK PROVISIONS. (LOCK TO BE SUPPLIED BY UTILITY COMPANY). SUBMIT WORKING DRAWINGS SHOWING SERVICE DISCONNECT SWITCH INSTALLATION FOR REVIEW AND APPROVAL.
10. PROVIDE SCALED DRAWING TO VERIFY THAT PROPOSED COMPONENTS WILL FIT IN THE CABINET.
11. PROVIDE GROUNDING AND BONDING IN ACCORDANCE WITH NEC REQUIREMENTS.
12. SECURE CABINET DOOR WITH A CORBIN LOCK NO. 15481RS KEYED FOR #2 SERIES. PROVIDE TWO (2) COPIES OF THE KEY TO NJDOT AND ONE (1) COPY TO THE ELECTRIC UTILITY.
13. ALL WELDS SIZES ARE ⅛".

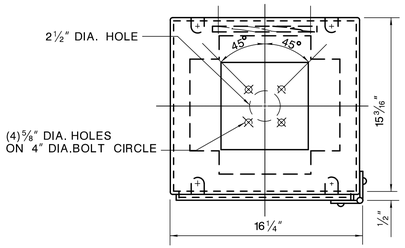

TOP VIEW

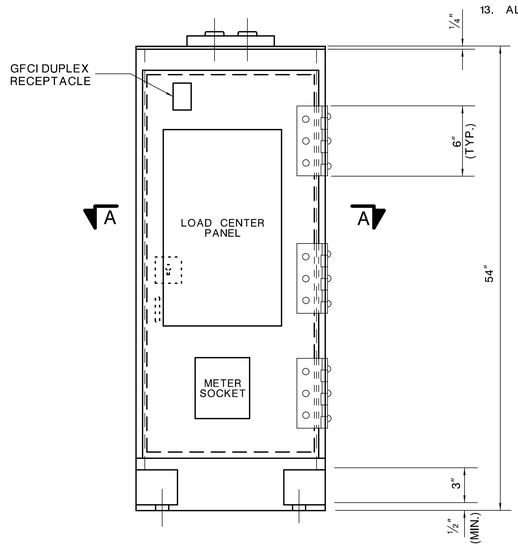

FRONT ELEVATION

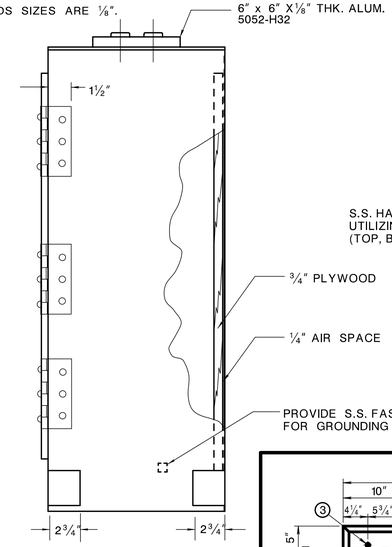

SIDE ELEVATION

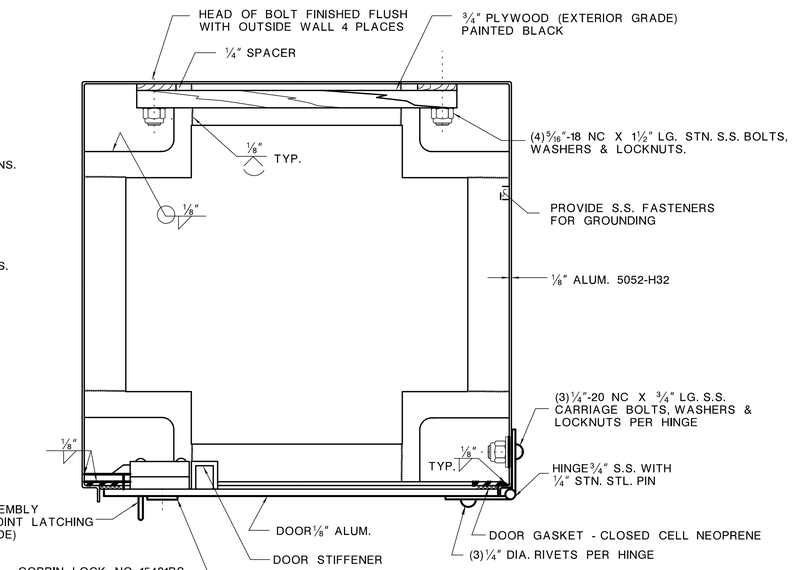

SECTION A-A

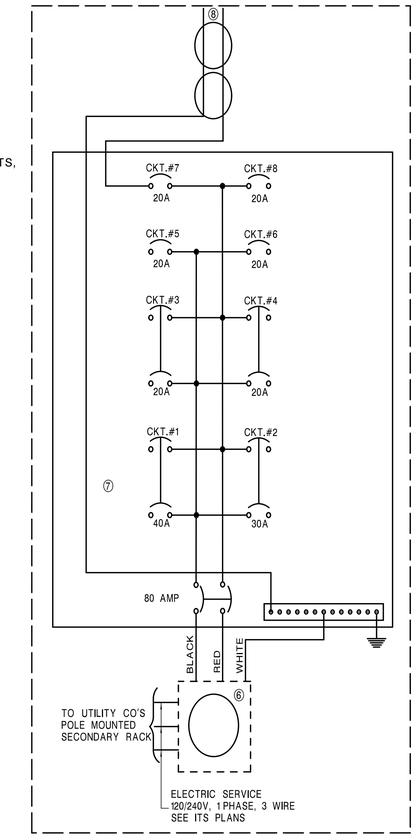

SCHEMATIC WIRING DIAGRAM: 120/240 VOLT

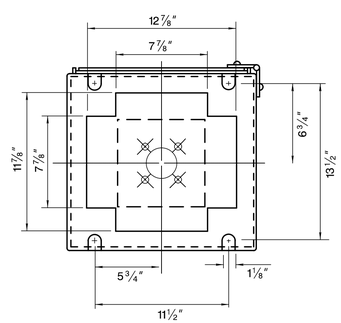

BOTTOM VIEW

ITEM

1. ⅝" DIA. X 12 FT. LONG GROUND ROD.
2. RIGID METALLIC SERVICE CONDUIT. (SEE GENERAL CONSTRUCTION PLANS FOR DIRECTION AND SIZE.)
3. ANCHOR BOLT DETAIL AS SHOWN.
4. LOCATIONS FOR DISTRIBUTION CONDUITS - FOR NUMBER, SIZE AND POSITION SEE GENERAL PLANS.
5. RADIUS - SUBJECT TO APPROVAL OF UTILITY COMPANY.

NOTE:

ALL CONCRETE SHALL BE CLASS "B".

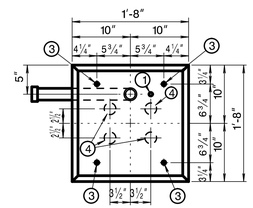

PLAN

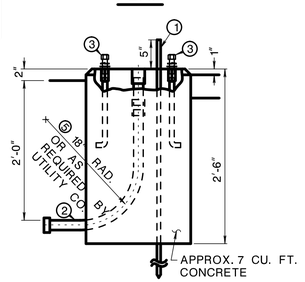

ELEVATION

FOUNDATION ITS TYPE MC

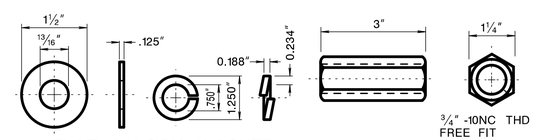

FLAT & LOCK WASHER

MAT'L - STN. STL.

COUPLING

MAT'L - STEEL, GALVANIZED PER ASTM A-153

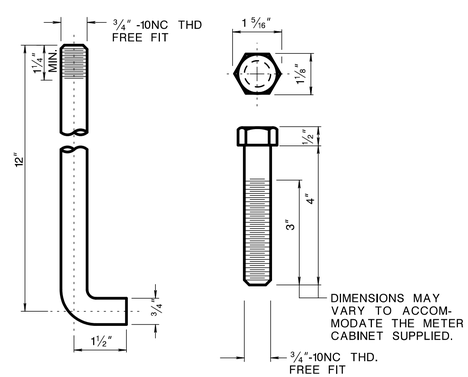

ANCHOR BOLT

MAT'L - STEEL PER ASTM A-576

CAP SCREW

MAT'L - STN. STL. PER ASTM A-193 GRADE B-8

3 ANCHOR BOLT ASSEMBLY

LEGEND

6. METER SOCKET-INSTALLED BY CONTRACTOR-PROVIDED BY UTILITY COMPANY ON REQUEST. (IN JCP&L CO. AREA METER SOCKET IS TO BE INSTALLED AND FURNISHED BY CONTRACTOR).
7. LOAD CENTER PANEL WITH ENCLOSURE- PROVIDE 125 AMP MAIN-RATED BUS, CONFORMING TO FEDERAL SPECIFICATION W-P-115C, TYPE 1, CLASS 1. PROVIDE CIRCUIT BREAKERS THAT ARE UL LISTED, COMPLY WITH NEMA STANDARDS, AND TO FEDERAL SPECIFICATION W-C-375B FOR CLASS 10A OR CLASS 10B. PROVIDE ONE (1) MAIN BREAKER 2-POLE 65 AMP; ONE (1) 2-POLE 40 AMP, ONE (1) 2-POLE 30 AMP TWO (2) 2-POLE 20 AMP, AND FOUR (4) 1-POLE 20 AMP BREAKERS.
8. WEATHERPROOF, 20AMP GFCI DUPLEX RECEPTACLE GROUND FAULT, IN MALLEABLE IRON BOX.

NOT TO SCALE

ITS-704-23

NEW JERSEY DEPARTMENT OF TRANSPORTATION

ITS DETAILS

METER CABINET ITS & FOUNDATION ITS TYPE MC

NJDOT Design Services
BDC-11D-03 - ORIGINAL SHEET
pen table=
scale=
date=
ID=
file=

PLANTING SUMMARY

ITEM NO.	DESCRIPTION	SYM.	PLANT NAME	PLAN SHEET QUANTITY	"IF & WHERE" QUANTITY	CONTRACT QUANTITY	AS-BUILT QUANTITY
811004M	Large Deciduous Tree, 2 1/2"-3" Caliper, B&B					6	
		Z	Zelkova serrata 'Green Vase'	6			
811024M	Small Deciduous Tree, 2 -2 1/2" Caliper, B&B					13	
		M	Malus 'Prairifire'	9			
		Pc	Pyrus calleryana 'Chanticleer'	4			
811039M	Evergreen Tree, 6-7' High, B&B					8	
		Jc	Juniperus chinensis 'Torulosa'	8			
811078M	Evergreen Shrub, 18-24" High, # 3 Container					64	
		Pl	Prunus laurocerasus 'Otto Luykens'	64			
811093M	Evergreen Shrub, 18-24" Spread, # 3 Container					38	
		Jh	Juniperus horizontalis 'Bar Harbor'	38			
811111M	Perennial, #1 Container					132	
		H	Hemerocallis 'Happy Returns'	34			
		Pv	Panicum virgatum 'Dallas Blues'	35			
		S	Sedum x 'Maestro'	63			
811123M	Bulb					14,500	
		N	Narcissus in Turf	14,500			

L-1 / L-2

NEW JERSEY DEPARTMENT OF TRANSPORTATION

LANDSCAPE PLANS

ROUTE U.S. 46 / LITTLE FERRY CIRCLE ELIMINATION

CONTRACT NO. 070950373

101

PARSONS BRINCKERHOFF CADD DATA
OPERATOR $$$$USERNAME$$$$QUEUE $$$$QUEUE$$$$
PLOT DATE $$$$SYTIME$$$$$$$$$$$$$$
PENTABLE $$$$$$$$pentable$$$$$$$$$$
DESIGN FILE $$$$$$$$$$$$$$$$$$$$$$$$$$$$DGNSPEC$$$$$$$$$$$$$$$$$$$$$$$$$$$$

BOROUGH OF LITTLE FERRY COUNTY OF BERGEN

TO BE PLANTED

ITEM NO.	DESCRIPTION	SYM.	PLANT NAME	SPACING	CONTRACT QUANTITY	AS-BUILT QUANTITY
811004M	Large Deciduous Tree, 2 1/2"-3" Caliper, B&B	Z	Zelkova serrata 'Green Vase'		6	
811024M	Small Deciduous Tree, 2 -2 1/2" Caliper, B&B	M	Malus 'Prairifire'		9	
811024M	Small Deciduous Tree, 2 -2 1/2" Caliper, B&B	Pc	Pyrus calleryana 'Chanticleer'		4	
811039M	Evergreen Tree, 6'-7' High, B&B	Jc	Juniperus chinensis 'Torulosa'		8	
811078M	Evergreen Shrub, 18-24" High, #3 Container	Pl	Prunus laurocerasus 'Otto Luykens'	4'	64	
811093M	Evergreen Shrub, 18-24" Spread, #3 Container	Jh	Juniperus horizontalis 'Bar Harbor'	4'	38	
811111M	Perennial, #1 Container	H	Hemerocallis 'Happy Returns'	1.5'	34	
811111M	Perennial, #1 Container	Pv	Panicum virgatum 'Dallas Blues'	3'	35	
811111M	Perennial, #1 Container	S	Sedum x 'Maestro'	1.5'	63	
811123M	Bulb	N	Narcissus in Turf		14,500	

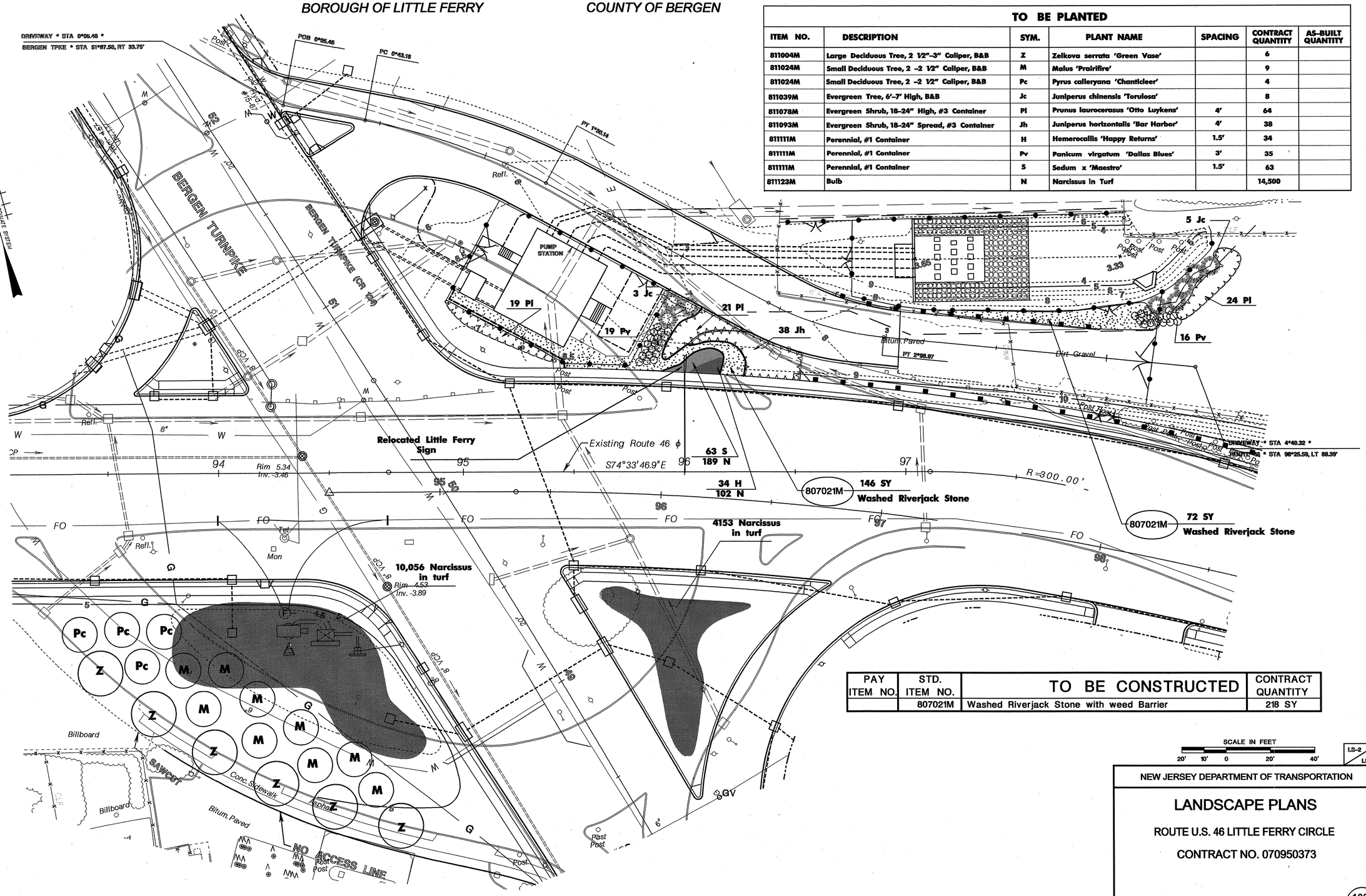

PAY ITEM NO.	STD. ITEM NO.	TO BE CONSTRUCTED	CONTRACT QUANTITY
	807021M	Washed Riverjack Stone with weed Barrier	218 SY

SCALE IN FEET
20' 10' 0 20' 40'

LS-2 / LS-2

NEW JERSEY DEPARTMENT OF TRANSPORTATION

LANDSCAPE PLANS

ROUTE U.S. 46 LITTLE FERRY CIRCLE

CONTRACT NO. 070950373

STATE	FEDERAL PROJECT NO.
N.J.	

SIGN TABLE
FOR SHEETS TSS-1 THROUGH TSS-5

SIGN DESIGNATION	MESSAGE	SIZE INCH X INCH	AREA IN SQ. FT.	REQUIRED QUANTITY IN NUMBER	TOTAL AREA IN SQ. FT.
D10-2(70)	MILE 70	10 x 27	1.9	2	3.8
D(NJ)15-LF	ENTERING BORO OF LITTLE FERRY	72 x 36	18.0	1	18.0
M1-4(46)	(STATE ROUTE MARKER) 46	24 x 24	4.0	3	12.0
M1-6(24)	(COUNTY ROUTE MARKER) 24	24 x 24	4.0	8	32.0
M2-1	JCT	24 x 14	2.3	3	6.9
M3-1	EAST	24 x 12	2.0	1	2.0
M3-3	SOUTH	24 x 12	2.0	1	2.0
M3-4	WEST	24 x 12	2.0	1	2.0
M4-5	TO	24 x 12	2.0	6	12.0
M6-1L	(LEFT ARROW)	24 x 12	2.0	3	6.0
M6-1R	(RIGHT ARROW)	24 x 12	2.0	2	4.0
M6-2R	(RIGHT ARROW)	24 x 12	2.0	1	2.0
M(NJ)8-2L	NEXT LEFT	21 x 15	2.2	1	2.2
OM1-3	(OBJECT MARKER)	18 x 18	2.3	1	2.3
R1-1	STOP	30 x 30	5.5	14	77.0
R1-2	YIELD	36x 36 x36	7.8	2	15.6
R2-1(XX)	SPEED LIMIT	36 x 48	12.0	2	24.0
R3-1	(NO RIGHT TURN)	24 x 24	4.0	2	8.0
R3-2	(NO LEFT TURN)	24 x 24	4.0	15	60.0
R3-3	NO TURNS	24 x 24	4.0	1	4.0
R3-5R	(RIGHT ARROW) ONLY	30 x 36	7.5	1	7.5
R3-7R	RIGHT LANE MUST TURN RIGHT	30 x 30	6.3	1	6.3
R3-8A	(LANE CONTROL)	48 x 30	10.0	3	30.0
R(NJ)3-8D	(LANE CONTROL)	60 x 30	12.5	3	37.5
R(NJ)3-8K	(LANE CONTROL)	60 x 30	12.5	1	12.5
R(NJ)3-8M	(LANE CONTROL)	60 x 30	12.5	6	75.0
R(NJ)3-8W	(LANE CONTROL)	48 x 30	10.0	2	20.0
R(NJ)3-8Z	AHEAD	30 x 12	2.5	1	2.5
R4-7	KEEP RIGHT	30 x 24	5.0	6	30.0
R5-1	DO NOT ENTER (SYMBOL)	30 x 30	6.3	3	18.9
R6-1L	ONE WAY (LEFT ARROW)	36 x 12	3.0	1	3.0
R6-1R	ONE WAY (RIGHT ARROW)	36 x 12	3.0	1	3.0
R(NJ)7-4L	NO STOPPING OR STANDING	18 x 24	3.0	1	3.0
R(NJ)7-4X	NO STOPPING OR STANDING	18 x 24	3.0	4	12.0
R9-3A	(NO PED CROSSING)	18 x 18	2.3	8	18.4
R9-3BR	USE CROSSWALK	18 x 12	1.5	2	3.0
R9-3BL	USE CROSSWALK	18 x 12	1.5	2	3.0
R10-5	LEFT TURN ON GREEN ARROW ONLY	24 x 30	5.0	4	20.0
R10-11A	NO TURN ON RED	24 x 30	5.0	1	5.0
R10-11B	NO TURN ON RED	24 x 24	4.0	1	4.0
R(NJ)10-13A	DELAYED GREEN	60 x 18	7.5	2	15.0
R(NJ)10-13B	DELAYED GREEN	24 x 24	4.0	2	8.0
R7-107AL	(TRANSIT) (LEFT ARROW)	12 x 30	2.5	2	5.0
R7-107AR	(TRANSIT) (RIGHT ARROW)	12 x 30	2.5	2	5.0
SIGN B	(MAST ARM STREET NAME)	60 x 18	7.5	4	30.0
SIGN C	(MAST ARM STREET NAME)	72 x 18	9.0	4	36.0
SIGN FJ1	FOUR STAR/JACK"S AUTO (RIGHT)	60 x 36	15.0	2	30.0
SIGN FJ2	FOUR STAR/JACK"S AUTO (LEFT)	60 x 36	15.0	2	30.0
SIGN KJ	KENNY AUTO/JOEY T	60 x 36	15.0	1	15.0
W4-2R	LANE ENDS	36 x 36	9.0	1	9.0
W8-5	(SLIPPERY WHEN WET)	36 x 36	9.0	1	9.0
W9-1R	RIGHT LANE ENDS	36 x 36	9.0	1	9.0
W11-2	PEDESTRIAN CROSSING	30 x 30	6.3	1	6.3
W16-2(200)	200 FEET	24 x 24	4.0	1	4.0
W16-7PL	DIAGONAL ARROW PLAQUE (LEFT)	30 18	3.8	1	3.8
				TOTAL	803.7 S.F.

NOTES:
1. SEE ELECTRICAL PLAN FOR LOCATION OF MASTER ARM SIGNS
2. SEE SIGNAL PLAN FOR LEGEND OF MAST ARM SIGNS.
3. EXISTING TRAILBLAZERS FOR NEW JERSEY TURNPIKE AND GARDEN STATE PARKWAY TO BE RELOCATED FOR SOUTHBOUND TRAFFIC AT THE INTERSECTION OF ROUTE 46 AND BERGEN TURNPIKE

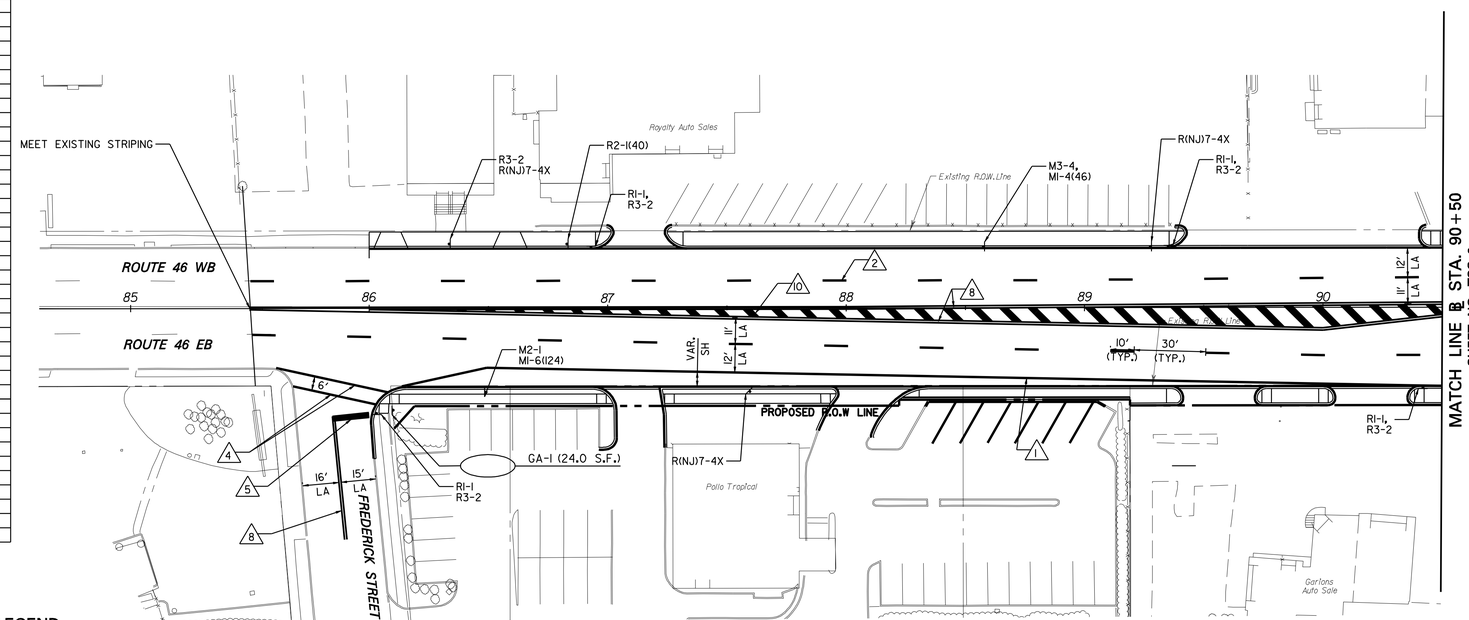

SIGN LEGEND
(FOR SHEETS TSS-1 THROUGH TSS-5)

ONLY ONLY ONLY ONLY — 4"C
R(NJ)3-8M
60"x30"
BLACK ON WHITE

ONLY ONLY ONLY — 4"C
R(NJ)3-8D
60"x30"
BLACK ON WHITE

ONLY ONLY ONLY ONLY — 4"C
R(NJ)3-8K
60"x30"
BLACK ON WHITE

ONLY ONLY ONLY — 4"C
R(NJ)3-8W
48"x30"
BLACK ON WHITE

Four Star Auto Glass
Jack's Auto Center
→
6"C U.C./4.5" L.C.
6"C U.C./4.5" L.C.
9.5"X5.4" 0°
SIGN FJ1
60"x36"
WHITE ON BLUE
WOOD POSTS

Four Star Auto Glass
Jack's Auto Center
←
6"C U.C./4.5" L.C.
6"C U.C./4.5" L.C.
9.5"X5.4" 180°
SIGN FJ2
60"x36"
WHITE ON BLUE
WOOD POSTS

NO STOPPING OR STANDING ↔ — 4"D, 2½"C, 2½"C, 2½"C, 2½"x8½"
R(NJ)7-4X
18"x24"
RED ON WHITE

Entering Boro of Little Ferry — 4"C
D(NJ)15-1(LF)
72"x36"
BLACK ON WHITE

NO STOPPING OR STANDING ← — 4"D, 2½"C, 2½"C, 2½"C, 2½"x8½"
R(NJ)7-4L
18"x24"
RED ON WHITE

BRIDGE FREEZES BEFORE ROAD SURFACE
W(NJ)8-5A
36"x36"
BLACK ON YELLOW

W ← Sylvan AVE 43 E → — 8"/6" U/L SERIES C (AVE: 5"/3.75" U/L SERIES C) W/E-5"C ARROW 5"X5.5"
SIGN C1
72"X18"
16"X16" SHIELD

Kenny's Auto Service
Joey T's Auto Repair
↱
6"C U.C./4.5" L.C.
6"C U.C./4.5" L.C.
90° 11.5"X8" ARROW
SIGN KJ
60"x36"
WHITE ON BLUE
WOOD POSTS

Bergen Tpk 124 Upper — 8"/6" U/L SERIES C (TPK: 5"/3.75" U/L SERIES C)
SIGN B
60"X18"
16"X16" SHIELD

ALL TURNS → — 8"
R(NJ)31-2B
72"X18"
BLACK ON WHITE

DELAYED GREEN — 6"C
R(NJ)10-13A
60"X12"

E ← Sylvan AVE 43 W → — 8"/6" U/L SERIES C (AVE: 5"/3.75" U/L SERIES C) W/E-5"C ARROW 5"X5.5"
SIGN C2
72"X18"
16"X16" SHIELD

STRIPING LEGEND

1. 4" SOLID WHITE STRIPE
2. 4" BROKEN WHITE STRIPE, (TYP.)
3. 8" SOLID WHITE STRIPE
4. 8" SOLID WHITE MARKING
5. 24" SOLID WHITE MARKING
6. 24" SOLID WHITE MARKING, 45°, 12' C. ON C.
7. 4" SOLID YELLOW STRIPE
8. 4" DOUBLE SOLID YELLOW STRIPE
9. 4" BROKEN YELLOW STRIPE, (TYP.)
10. 24" SOLID YELLOW MARKING 45°, 12' C. ON C.
11. SOLID WHITE TRAFFIC MARKING
12. 12" SOLID WHITE MARKING, 24" C. ON C.
13. 4" BROKEN DOUBLE YELLOW STRIPE, 2' STRIPE, 4' SPACING
14. 4" BROKEN WHITE STRIPE, 2' STRIPE, 4' SPACING

SCALE IN FEET
30' 20' 10' 0 30' 60'

TSS-1 / TSS-5

NEW JERSEY DEPARTMENT OF TRANSPORTATION

TRAFFIC SIGNING AND STRIPING PLANS

ROUTE U.S. 46 LITTLE FERRY CIRCLE

CONTRACT NO. 069950373

PARSONS BRINCKERHOFF, INC.
CERTIFICATION OF AUTHORIZATION NO. 24GA28029800

STEWART R. GORDON
N.J. PROFESSIONAL ENGINEER NO. GE036608

ITEM NO.	TO BE CONSTRUCTED	CONTRACT QUANTITY
612006P	GUIDE SIGN, TYPE GA, STEEL "U" POST SUPPORTS	24.0 S.F.

PARSONS BRINCKERHOFF CADD DATA

OPERATOR	Carnevale	QUEUE	\\amprlpr+01\PRIPL03_BW.LP
PLOT DATE	07-MAR-2013 15:18		
PENTABLE	ehx.tbl		
DESIGN FILE	T:\20063\Tr+Fx\tss01.dgn		

STATE	FEDERAL PROJECT NO.
N.J.	

BOROUGH OF LITTLE FERRY

COUNTY OF BERGEN

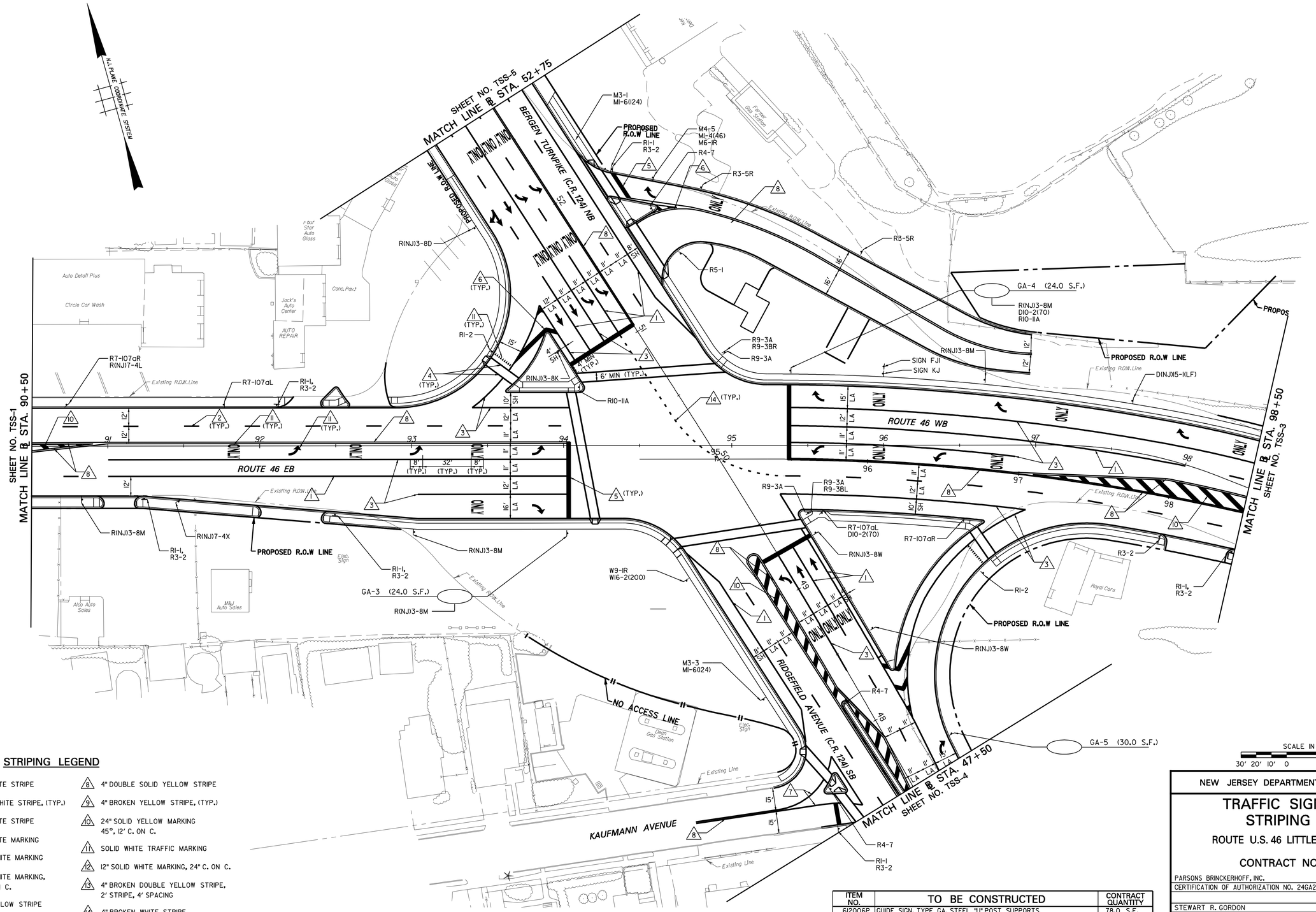

STRIPING LEGEND

1. 4" SOLID WHITE STRIPE
2. 4" BROKEN WHITE STRIPE, (TYP.)
3. 8" SOLID WHITE STRIPE
4. 8" SOLID WHITE MARKING
5. 24" SOLID WHITE MARKING
6. 24" SOLID WHITE MARKING, 45°, 12' C. ON C.
7. 4" SOLID YELLOW STRIPE
8. 4" DOUBLE SOLID YELLOW STRIPE
9. 4" BROKEN YELLOW STRIPE, (TYP.)
10. 24" SOLID YELLOW MARKING 45°, 12' C. ON C.
11. SOLID WHITE TRAFFIC MARKING
12. 12" SOLID WHITE MARKING, 24" C. ON C.
13. 4" BROKEN DOUBLE YELLOW STRIPE, 2' STRIPE, 4' SPACING
14. 4" BROKEN WHITE STRIPE, 2' STRIPE, 4' SPACING

ITEM NO.	TO BE CONSTRUCTED	CONTRACT QUANTITY
612006P	GUIDE SIGN, TYPE GA, STEEL "U" POST SUPPORTS	78.0 S.F.

SCALE IN FEET
30' 20' 10' 0 30' 60'

TSS-2 / TSS-5

NEW JERSEY DEPARTMENT OF TRANSPORTATION

TRAFFIC SIGNING AND STRIPING PLANS

ROUTE U.S. 46 LITTLE FERRY CIRCLE

CONTRACT NO. 069950373

PARSONS BRINCKERHOFF, INC.
CERTIFICATION OF AUTHORIZATION NO. 24GA28029800

STEWART R. GORDON
N.J. PROFESSIONAL ENGINEER NO. GE036608

104

PARSONS BRINCKERHOFF CADD DATA

OPERATOR	Carnevale	QUEUE	\\ampr1pr10\PRIPL03.BW_IP
PLOT DATE	07-MAR-2013 15:18		
PENTABLE	ehx.tbl		
DESIGN FILE	T:\20063\Tr-f\tss02.dgn		

STATE	FEDERAL PROJECT NO.
N.J.	

NOTES:

1. FOR EXACT NUMBER AND LOCATION OF SIGNAL HEADS IN EACH CONSTRUCTION STAGE, SEE SHEETS TTS-1 THROUGH TTS-2.
2. SPAN WIRE SHALL BE 9/16" DIAMETER, HIGH-STRENGTH GRADE, GALVANIZED, 7-WIRE STRAND WITH 24.5 KIP BREAKING STRENGTH.
3. THE GUY WIRE SHALL BE 7/8" DIAMETER, HIGH-STRENGTH GRADE, GALVANIZED, 19-WIRE STRAND WITH 55.8 KIP BREAKING STRENGTH.
4. THE WIRE STRANDS SHALL BE CLASS A HOT-DIP GALVANIZED IN ACCORDANCE WITH ASTM A-475.
5. THE GUY WIRE PROTECTOR TO BE USED SHALL BE THE HALF-ROUND TYPE, FABRICATED FROM AT LEAST 14-GAGE STEEL AND SHALL BE HOT-DIP GALVANIZED. ITS LENGTH SHALL BE A MINIMUM OF 7.0'.
6. THE ANCHOR TO BE USED FOR GUYING THE POLE SHALL BE A TRIPLE HELICAL ANCHOR WITH A 1.5" ANCHOR ROD AS SHOWN OR AN EQUIVALENT ANCHOR APPROVED BY THE ENGINEER, SEE SHEET TTS-4 FOR DETAILS.
7. THE ANCHOR ROD TO BE USED FOR GUYING THE POLE SHALL BE OF DROP STEEL AND SHALL BE HOT-DIP GALVANIZED PER ASTM A153.
8. FOR ALUMINUM MATERIAL, STAINLESS STEEL FITTINGS SHALL BE USED.
9. THE ERECTION SEQUENCE SHALL BE AS FOLLOWS:
   - A. INSTALL POLES AND ALLOW FOUNDATION CONCRETE TO CURE.
   - B. INSTALL ANCHORS AND CONNECT GUY WIRE WITH STRAIN INSULATORS. LEAVE A MINIMUM OF 2.0' OF TAIL AFTER THE 3-BOLT CLAMP AT EACH ANCHOR ROD.
   - C. USING A COME-ALONG, SNUG EACH GUY WIRE TO ABOUT 2 KIP AND TIGHTEN 3-BOLT CLAMP. POLES TO REMAIN VERTICAL (WITHIN A 6" TOLERANCE AT THE TOP).
   - D. INSTALL SPAN WIRE WITH STRAIN INSULATORS. LEAVE A MINIMUM OF 2.0' OF TAIL AFTER THE 3-BOLT CLAMP AT EACH END OF SPAN WIRE.
   - E. ATTACH SIGNAL HEADS TO SPAN WIRE AND TIGHTEN SPAN WIRE AND GUY WIRES INCREMENTALLY SUCH THAT THE POLES WILL REMAIN VERTICAL (WITHIN A 6" TOLERANCE AT THE TOP) UNDER THE SIGNAL HEAD ASSEMBLY LOADS. FOR FINAL SAG IN SPAN WIRE, SEE ELEVATION.
   - F. INSTALL MESSENGER WIRE AS PER NOTE 16.
10. INSPECT AND ADJUST CABLES AS NECESSARY AND TIGHTEN 3-BOLT CLAMPS WEEKLY TO COMPENSATE FOR STRETCH IN WIRE CABLES.
11. IF THE ACTUAL CONFIGURATION OF SIGNAL HEADS GENERATES A HEAVIER LOADING THAN WHAT IS SHOWN ON THE DESIGN LOADING CONFIGURATION, THE CONTRACTOR SHALL SUBMIT DESIGN CALCULATIONS TO THE ENGINEER FOR APPROVAL.
12. THE POLES SHALL BE CLASS H-3, DOUGLAS FIR OR SOUTHERN PINE OF 65.0' LENGTH. AFTER INSTALLATION, THE POLES SHALL BE CUT FROM THE TOP TO AN APPROPRIATE LENGTH.
13. MESSENGER WIRE SHALL BE 1/2" DIAMETER, HIGH-STRENGTH GRADE, GALVANIZED, 7-WIRE STRAND WITH 18.8 KIP BREAKING STRENGTH.
14. ALL TEMPORARY SIGNALS SHALL BE POLYCARBONATE.
15. SIGNAL WIRE SHALL BE IN ACCORDANCE WITH NJDOT STANDARDS.
16. MESSENGER WIRE SHALL BE INSTALLED WITH A SAG (1.5' MIN., 2.0' MAX. AT LOWEST POINT OF SPAN) TO OBTAIN RANGE OF TENSION USED IN THE DESIGN OF THE WIRE. ONCE MESSENGER WIRE IS INSTALLED, THE SAG SHALL BE REVERSED BY LIFTING AND CONNECTING THE WIRE TO THE SIGNAL HEAD ASSEMBLIES.
17. FOR WIRE CONNECTIONS, SIGNAL HEAD ASSEMBLY AND FOUNDATION DETAILS, SEE SHEET TTS-4.
18. THE CONTRACTOR SHALL VERIFY THE LOCATION, DEPTH AND HEIGHT OF ALL UNDERGROUND AND OVERHEAD UTILITIES AND SHALL ADJUST THE DESIGN IF NECESSARY AS APPROVED BY THE ENGINEER.
19. THE CONTRACTOR SHALL SUBMIT CALCULATIONS FOR THE ATTACHMENT HARDWARE OF THE CONTROLLER ASSEMBLY TO THE WOOD POLE TO THE ENGINEER FOR REVIEW. THE CALCULATIONS SHALL BE CERTIFIED BY A LICENSED N.J. STRUCTURAL ENGINEER.
20. THE CONTRACTOR SHALL SUPPLY CATALOG CUTS FOR THE POLE MOUNTED CONTROLLER CABINET AND METER ASSEMBLY TO THE ENGINEER FOR APPROVAL.
21. IMAGE DETECTOR UNIT TO BE PER TEMPORARY TRAFFIC SIGNAL PLAN. LOCATE AND ADJUST IMAGE DETECTOR UNIT FOR OPTIMAL DETECTION THROUGHOUT THE STAGE OF CONSTRUCTION.

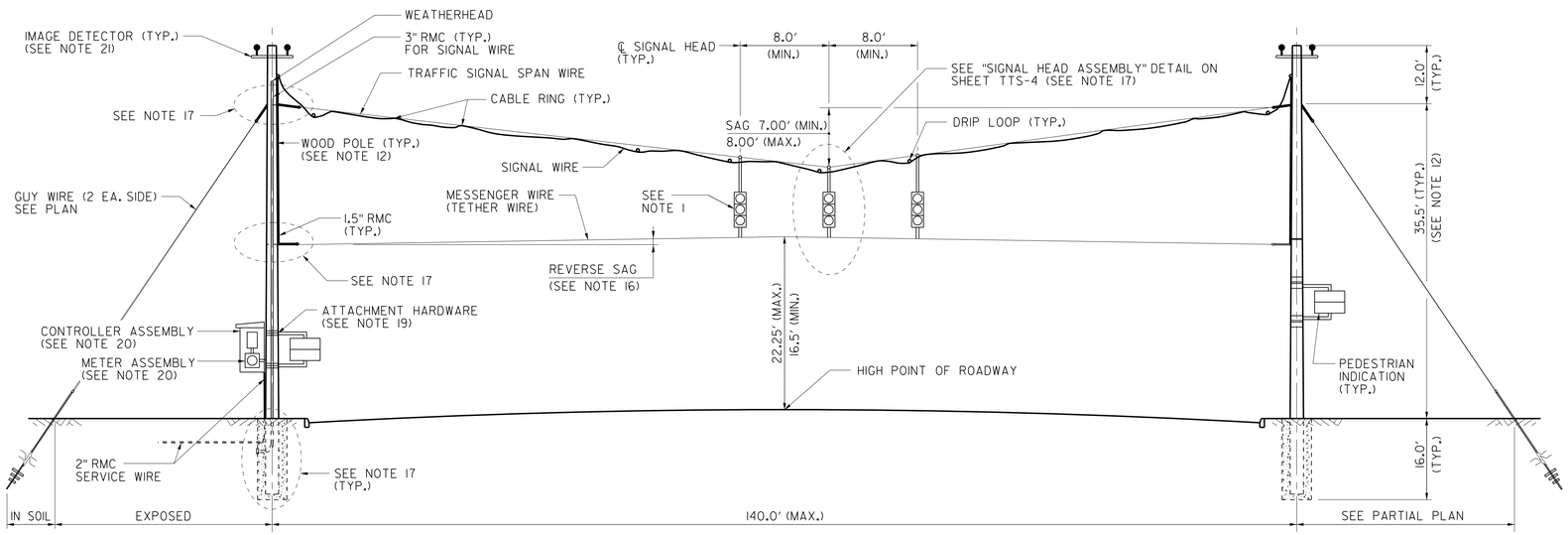

TYPICAL ELEVATION – DIAGONAL SPAN

WITH OVER-THE-ROADWAY TRAFFIC SIGNALS
(LOOKING UPSTATION)
N.T.S.

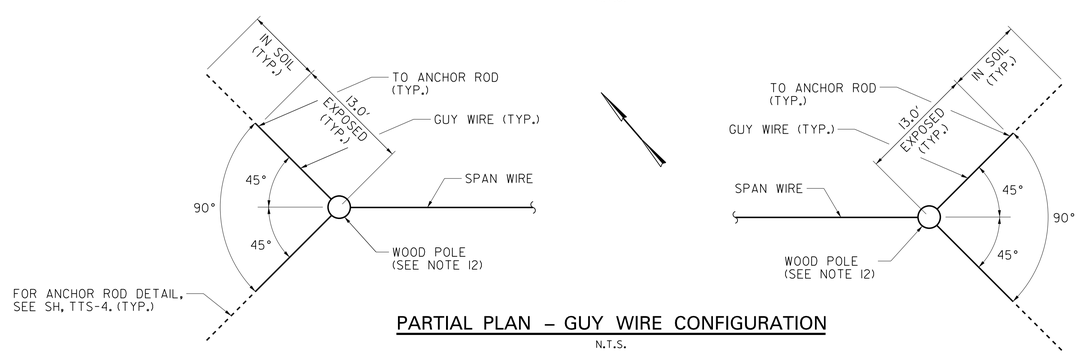

PARTIAL PLAN – GUY WIRE CONFIGURATION

N.T.S.

ROUTE U.S. 46 & BERGEN TURNPIKE

TTS-3 / TTS-4

NEW JERSEY DEPARTMENT OF TRANSPORTATION

TEMPORARY TRAFFIC SIGNAL PLANS

ROUTE U.S. 46 LITTLE FERRY CIRCLE

CONTRACT NO. 069950373

PARSONS BRINCKERHOFF, INC.
CERTIFICATION OF AUTHORIZATION NO. 24GA28029800

RICHARD C. SZATKOWSKI
N.J. PROFESSIONAL ENGINEER NO. 24GE03445300

PARSONS BRINCKERHOFF CADD DATA

OPERATOR	birtta	QUEUE	\\ampr1pr-t01\PRIPL03.BW\JP
PLOT DATE	07-MAR-2013 17:12		
PENTABLE	enx.tbl		
DESIGN FILE	T:\20063\str\tts03.dgn		

STATE	FEDERAL PROJECT NO.
N.J.	

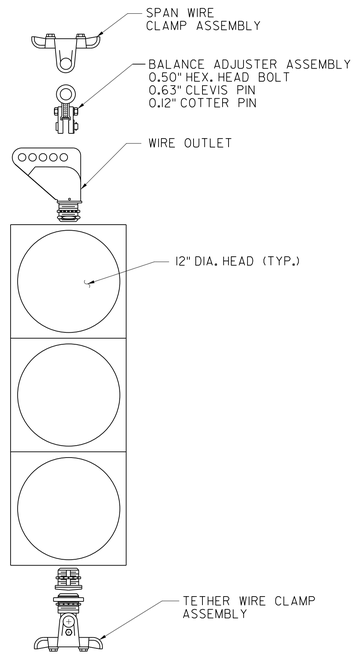

TYPICAL SIGNAL HEAD ASSEMBLY

N.T.S.

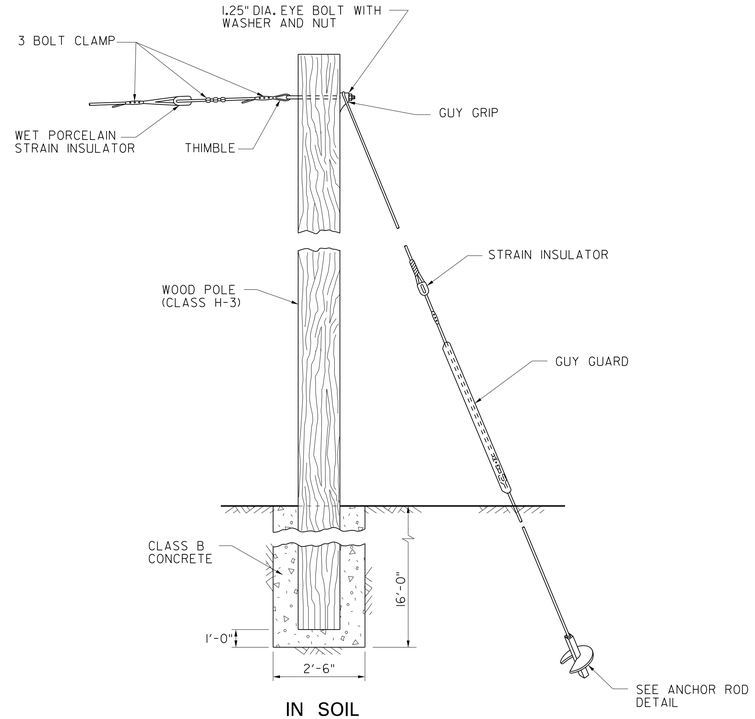

IN SOIL

WOOD POLE INSTALLATION

N.T.S.

NOTES:

1. SHAFT MATERIAL SHALL BE IN ACCORDANCE WITH ASTM A29-(LATEST REVISION) OR APPROVED MECHANICAL EQUIVALENT.
2. HELIX MATERIAL SHALL BE IN ACCORDANCE WITH ASTM A936 HOT ROLLED HIGH STRENGTH LOW ALLOY STEEL SHEET OR ASTM A656 HOT ROLLED STRUCTURAL STEEL PLATE.
3. COUPLING BOLTS SHALL BE ¾" DIAMETER BOLTS X 3" LONG HEX HEAD IN ACCORDANCE WITH ASTM A320 GRADE L7.
4. ALL WELDING SHALL BE DONE BY WELDERS CERTIFIED UNDER SECTION 5 OF THE AWS D1.1.
5. LEAD AND EXTENSION SECTIONS LENGTHS AND HELIX SPACING SHOWN ARE NOMINAL DIMENSIONS. MINOR VARIATIONS MAY BE EXPECTED.
6. NOMINAL SPACING BETWEEN HELIX PLATES IS THREE TIMES THE DIAMETER OF THE SMALLER HELIX.
7. THE CONTRACTOR SHALL SUBMIT HIS PROPOSED PROCEDURE FOR INSTALLATION OF THE DRILLED SHAFT, WOOD POLE, AND HELICAL ANCHOR FOR APPROVAL BY THE ENGINEER.

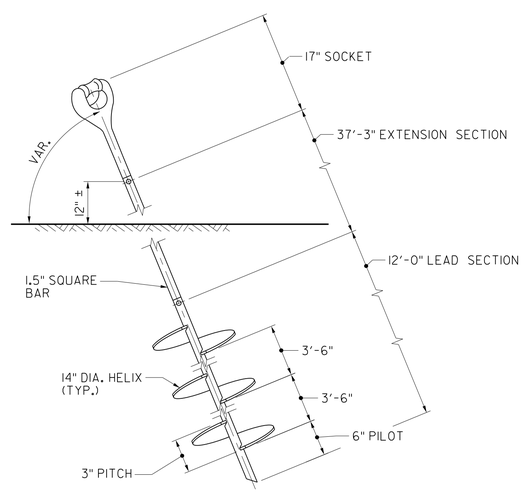

IN SOIL

ANCHOR ROD DETAIL

(WITH EXTENSION)

N.T.S.

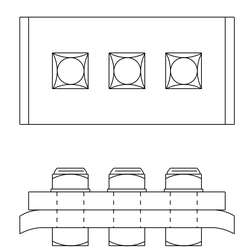

3 – BOLT GUY CLAMP

N.T.S.

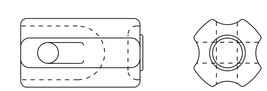

STRAIN INSULATOR

N.T.S.

TTS-4 / TTS-4

NEW JERSEY DEPARTMENT OF TRANSPORTATION

TEMPORARY TRAFFIC SIGNAL PLANS

ROUTE U.S. 46 LITTLE FERRY CIRCLE

CONTRACT NO. 069950373

PARSONS BRINCKERHOFF, INC.
CERTIFICATION OF AUTHORIZATION NO. 24GA28029800

RICHARD C. SZATKOWSKI
N.J. PROFESSIONAL ENGINEER NO. 24GE03445300

106

PARSONS BRINCKERHOFF CADD DATA

OPERATOR	birtta	QUEUE	\\amprlpr-t01\PRIPL03_BW\P
PLOT DATE	07-MAR-2013 17:12		
PENTABLE	etx.tbl		
DESIGN FILE	T:\20063\str\tts04.dgn		

STATE	FEDERAL PROJECT NO.
N.J.	

BOROUGH OF LITTLE FERRY

COUNTY OF BERGEN

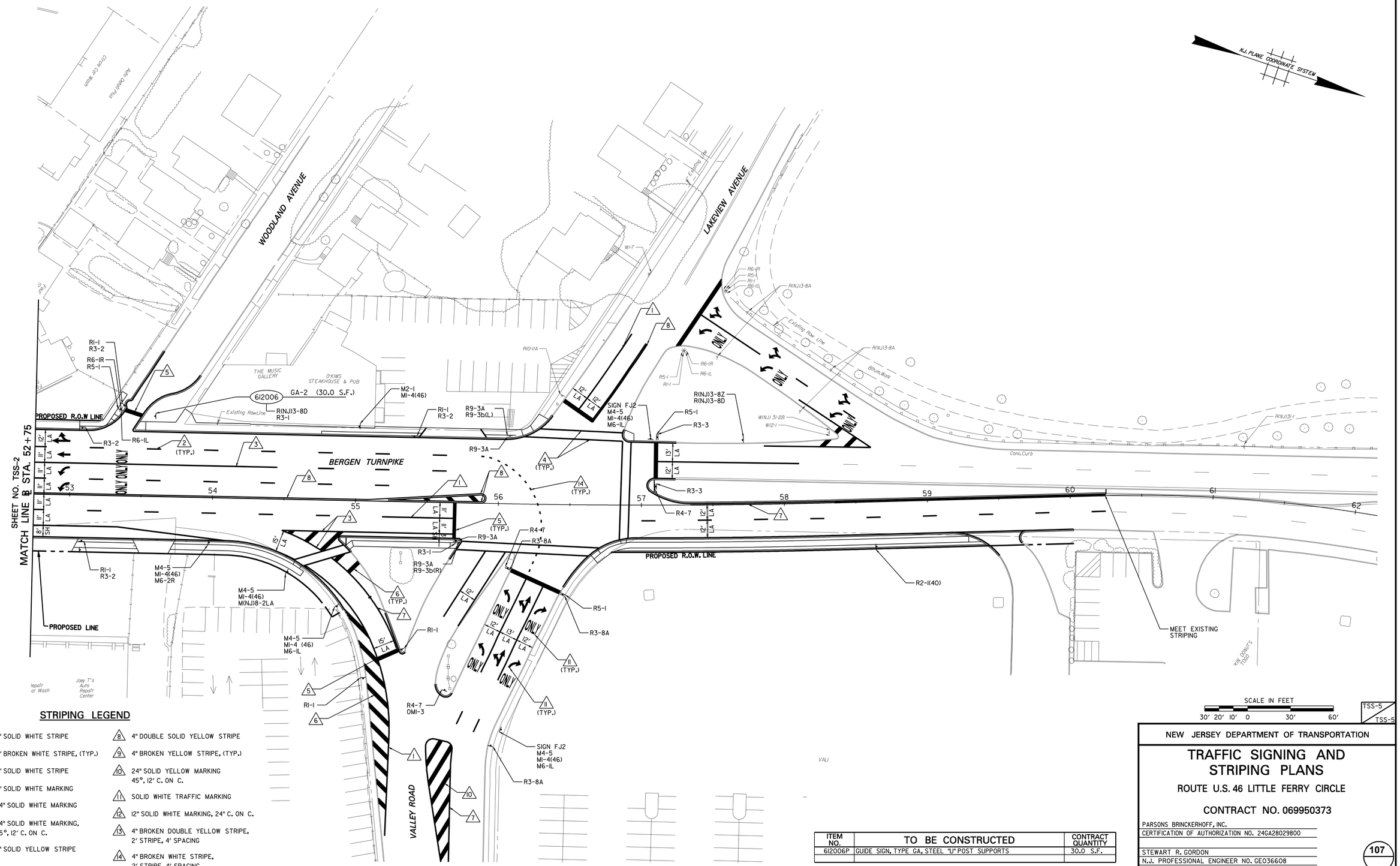

STRIPING LEGEND

1. 4" SOLID WHITE STRIPE
2. 4" BROKEN WHITE STRIPE, (TYP.)
3. 8" SOLID WHITE STRIPE
4. 8" SOLID WHITE MARKING
5. 24" SOLID WHITE MARKING
6. 24" SOLID WHITE MARKING, 45°, 12' C. ON C.
7. 4" SOLID YELLOW STRIPE
8. 4" DOUBLE SOLID YELLOW STRIPE
9. 4" BROKEN YELLOW STRIPE, (TYP.)
10. 24" SOLID YELLOW MARKING 45°, 12' C. ON C.
11. SOLID WHITE TRAFFIC MARKING
12. 12" SOLID WHITE MARKING, 24" C. ON C.
13. 4" BROKEN DOUBLE YELLOW STRIPE, 2' STRIPE, 4' SPACING
14. 4" BROKEN WHITE STRIPE, 2' STRIPE, 4' SPACING

ITEM NO.	TO BE CONSTRUCTED	CONTRACT QUANTITY
612006P	GUIDE SIGN, TYPE GA, STEEL "U" POST SUPPORTS	30.0 S.F.

NEW JERSEY DEPARTMENT OF TRANSPORTATION

TRAFFIC SIGNING AND STRIPING PLANS

ROUTE U.S. 46 LITTLE FERRY CIRCLE

CONTRACT NO. 069950373

PARSONS BRINCKERHOFF, INC.
CERTIFICATION OF AUTHORIZATION NO. 24GA28029800

STEWART R. GORDON
N.J. PROFESSIONAL ENGINEER NO. GE036608

PARSONS BRINCKERHOFF CADD DATA

OPERATOR	Carnevale	QUEUE	\\ampr1pr+01\PRIP.L03_BW.IP
PLOT DATE	07-MAR-2013 15:18		
PENTABLE	ehx.tbl		
DESIGN FILE	T:\20063\Tr+f\Tss05.dgn		

STATE	FEDERAL PROJECT NO.
N.J.	

IDENT NO.	STATION	TEXT	U.C.	L.C.	CAPS (SEE NOTE 1)	NO SIZE	SHIELD SIZE	ARROW SIZE (SEE NOTE 2)	VERTICAL SPACE IN INCHES (SEE NOTE 2)	SIZE (INCLUDES BORDER)	POST SUPPORTS NO.	POST SUPPORTS MATL.	POST SUPPORTS SIZE	WORK TO BE PERFORMED
GA-1	ROUTE 46 STA. 86+10	NORTH 124 SOUTH HACKENSACK			6/5 6		18X18	LEFT 12X10 RIGHT 12X10 LEFT 12X10	7 7 6 3 18 10 3 4 1 1 4 6 10 6 4 6	72"X48" (24.0 S.F.) WHITE ON GREEN	2	STEEL	4.0#	NEW SIGN
GA-2	BERGEN TURNPIKE STA. 53+60	EAST 46 WEST LODI RIDGEFIELD PK			6/5 6 6		24X24	LEFT 12X10 45° 6X9.5 45° 6X9.5 LEFT 12X10	3 3 6 5 24 10 6 3 1 1 4 3 6 7 3 3 1 1 2 4 10 6 3 5	72"X60" (30.0 S.F.) WHITE ON GREEN	3	STEEL	4.0#	NEW SIGN INSTALL WITH R(NJ)3-8D, R3-1
GA-3	ROUTE 46 STA. 94+05	NORTH 124 SOUTH HACKENSACK			6/5 6		18X18	180° 6X9.5 0° 6X9.5 180° 6X9.5	6 6 6 6 18 6 5 5 1 5 6 7	72"X48" (24.0 S.F.) WHITE ON GREEN	3	STEEL	4.0#	NEW SIGN INSTALL WITH R(NJ)3-8M
GA-4	ROUTE 46 STA. 95+39	SOUTH 124 NORTH HACKENSACK			6/5 6		18X18	180° 6X9.5 0° 6X9.5 180° 6X9.5	6 6 6 6 18 6 5 5 1 5 6 7	72"X48" (24.0 S.F.) WHITE ON GREEN	3	STEEL	4.0#	NEW SIGN INSTALL WITH R(NJ)3-8M D10-2(70)
GA-5	RIDGEFIELD AVE. STA. 47+64	WEST 46 EAST LODI RIDGEFIELD PK			6/5 6 6		24X24	LEFT 12X10 45° 6X9.5 LEFT 12X10 45° 6X9.5	3 3 6 5 24 10 6 3 1 1 4 3 6 7 3 3 1 1 2 4 10 6 3 5	72"X60" (30.0 S.F.) WHITE ON GREEN	2	STEEL	4.0#	NEW SIGN
GA-6	ROUTE 46 STA. 100+70	SOUTH 124 NORTH HACKENSACK			6/5 6		18X18	LEFT 12X10 RIGHT 12X10 RIGHT 12X10	7 7 6 3 18 10 3 4 1 1 4 6 10 6 4 6	72"X48" (24.0 S.F.) WHITE ON GREEN	2	STEEL	4.0#	NEW SIGN

STEEL U-POST SIGN SUPPORT DATA TABLE

IDENTIFICATION NO.	IDENTIFICATION STATION	OFFSET X_1	PANEL SIZE W(ft)	PANEL SIZE B_1(ft)	NO. OF POSTS	POST HEIGHT P_1	POST HEIGHT P_2	POST HEIGHT P_3	POST SIZE (lbs/ft)	POST TYPE
GA-1	Route 46/Sta. 86+10	1	6	4	2	11	11	-	4.0	STEEL
GA-2	Bergen Turnpike/Sta. 53+60	1	6	5	3	13	13	13	4.0	STEEL
GA-3	Route 46/Sta. 94+05	1	6	4	3	12.5	12.5	12.5	4.0	STEEL
GA-4	Route 46/Sta. 95+39	1	6	4	3	14.5	14.5	14.5	4.0	STEEL
GA-5	Ridgefield Avenue/Sta. 47+64	1	6	5	2	12	12	-	4.0	STEEL
GA-6	Route 46/Sta. 100+70	1	6	4	2	11	11	-	4.0	STEEL

NOTES:
1. 6/5 INDICATES THE SIZE OF THE FIRST LETTER OF THE CARDINAL DIRECTION FOLLOWED BY THE SIZE OF THE REMAINING LETTERS.
2. ALL DIMENSIONS ARE INCHES UNLESS OTHERWISE NOTED.
3. VERTICAL SPACING WITH SPLIT COLUMNS SHOWS SPACING FOR TEXT/ARROWS AND SPACING FOR SHIELDS.

STD-1 / STD-1

NEW JERSEY DEPARTMENT OF TRANSPORTATION

SIGN TEXT DATA AND U-POST SUPPORT DETAILS
ROUTE U.S. 46 LITTLE FERRY CIRCLE

CONTRACT NO. 069950373

PARSONS BRINCKERHOFF, INC.
CERTIFICATION OF AUTHORIZATION NO. 24GA28029800

STEWART R. GORDON
N.J. PROFESSIONAL ENGINEER NO. 24GE03660800

PARSONS BRINCKERHOFF CADD DATA
OPERATOR Carnevale QUEUE \\amprlpr+01\PRIPL03_BW.IP
PLOT DATE 07-MAR-2013 15:13
PENTABLE +c.+bl
DESIGN FILE T:\20063\Trf\std01.dgn

STATE	FEDERAL PROJECT NO.
N.J.	

BOROUGH OF LITTLE FERRY

COUNTY OF BERGEN

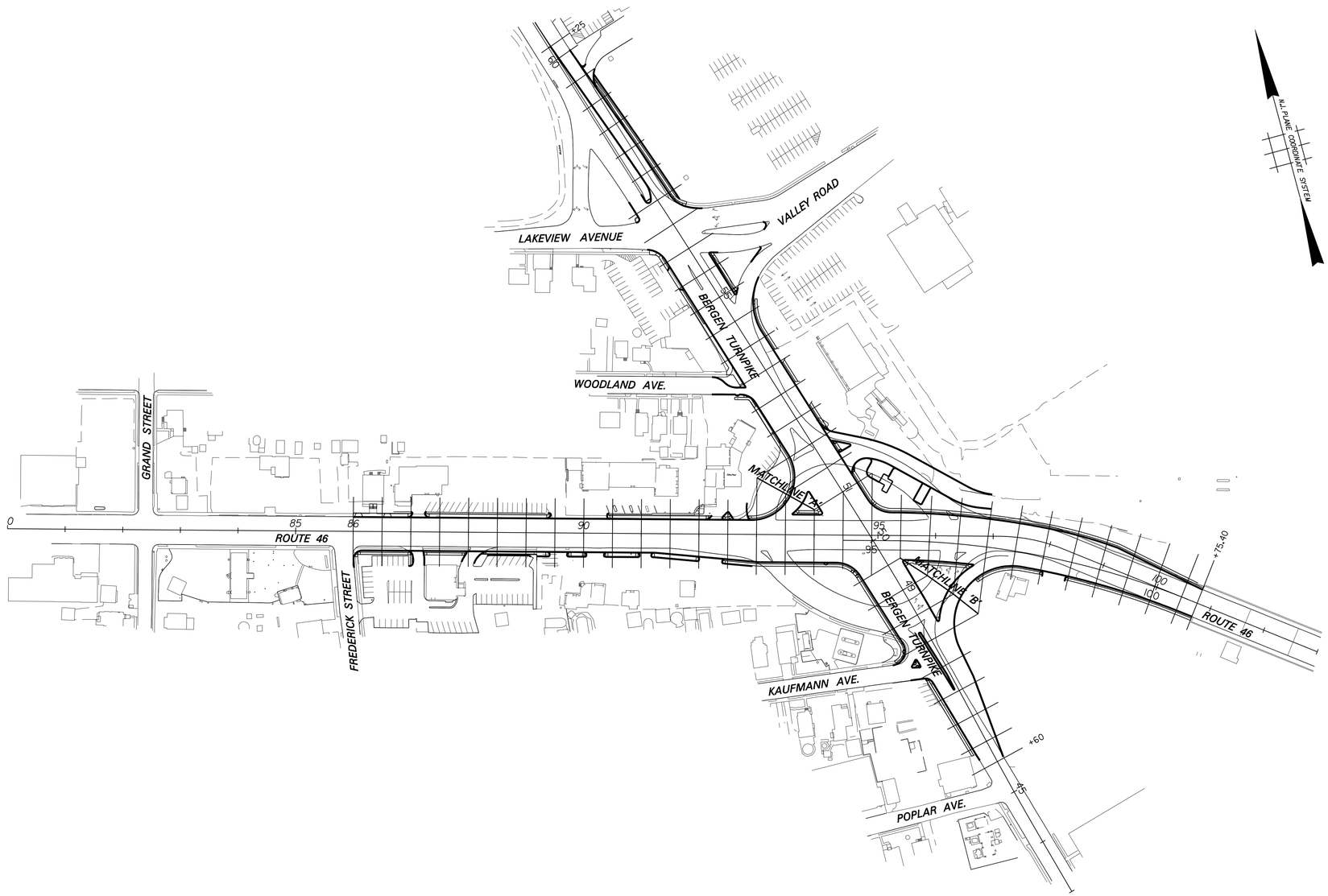

SCALE IN FEET

100′ 50′ 0 100′ 200′

MS-1 / MS-1

NEW JERSEY DEPARTMENT OF TRANSPORTATION

METHOD OF CROSS SECTIONS

ROUTE U.S. 46 LITTLE FERRY CIRCLE

CONTRACT NO. 069950373

PARSONS BRINCKERHOFF, INC.
CERTIFICATION OF AUTHORIZATION NO. 24GA28029800

MICHAEL D. HELMLINGER
N.J. PROFESSIONAL ENGINEER NO. 24GE03812100

109

PARSONS BRINCKERHOFF CADD DATA

OPERATOR	HeNg	QUEUE	\\Ampr1pr-t01\PRIPL03_BW.IP
PLOT DATE	06-MAR-2013 15:33		
PENTABLE	ehx.tbl		
DESIGN FILE	T:\20063\ms01.dgn		

STATE	FEDERAL PROJECT NO.
N.J.	

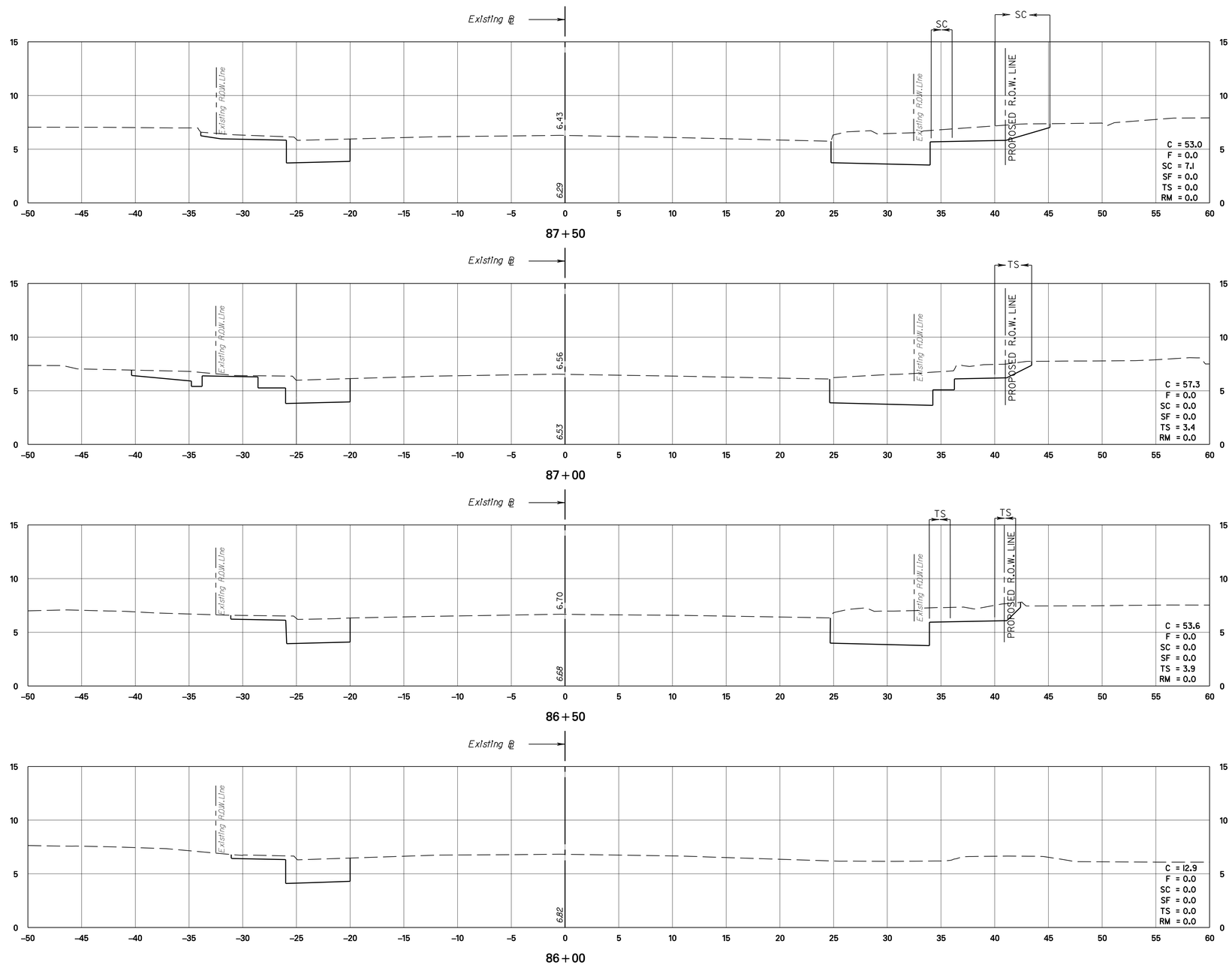

LEGEND

C = CUT (SF) SC = STRIP CUT (LF) TS = TOPSOIL (LF)

F = FILL (SF) SF = STRIP FILL (LF)

RM = REGULATED MATERIAL (SF)

UNDERCUT AND BACKFILL WITH EMBANKMENT

REGULATED MATERIAL

NOTES

ALL CROSS-SECTIONS ARE RADIAL OR AT RIGHT ANGLES TO THE BASE LINES EXCEPT WHERE OTHER METHODS ARE INDICATED

EXCAVATION AND EMBANKMENT QUANTITIES SHOWN ON THE CROSS-SECTIONS ARE MEASURED BETWEEN THE DASHED LINES REPRESENTING THE SURFACE OF THE EXISTING GROUND AND THE SOLID LINES REPRESENTING THE LIMITS OF EXCAVATION OR EMBANKMENT. WHERE TOPSOILING IS PROPOSED, THE SOLID LINES INDICATE THE BOTTOM OF THE PROPOSED TOPSOIL.

THE PROPOSED GRADES SHOWN ON THE CROSS-SECTIONS ARE FOR ESTIMATING QUANTITIES.

ROUTE 46 B.L.
STATION 86+00 TO STATION 87+50
SCALE IN FEET
5' 0 5' 10'

X-01 / X-17

NEW JERSEY DEPARTMENT OF TRANSPORTATION

CROSS SECTIONS

ROUTE U.S. 46 LITTLE FERRY CIRCLE

CONTRACT NO. 069950373

PARSONS BRINCKERHOFF, INC.
CERTIFICATION OF AUTHORIZATION NO. 24GA28029800

MICHAEL D. HELMLINGER
N.J. PROFESSIONAL ENGINEER NO. 24GE03812100

PARSONS BRINCKERHOFF CADD DATA

OPERATOR	HeNg	QUEUE	$$$$QUEUE$$$$
PLOT DATE	06-MAR-2013 15:34		
PENTABLE	pentable=ehdot.tbl		
DESIGN FILE	T:\20063\xs01.dgn		

STATE	FEDERAL PROJECT NO.
N.J.	

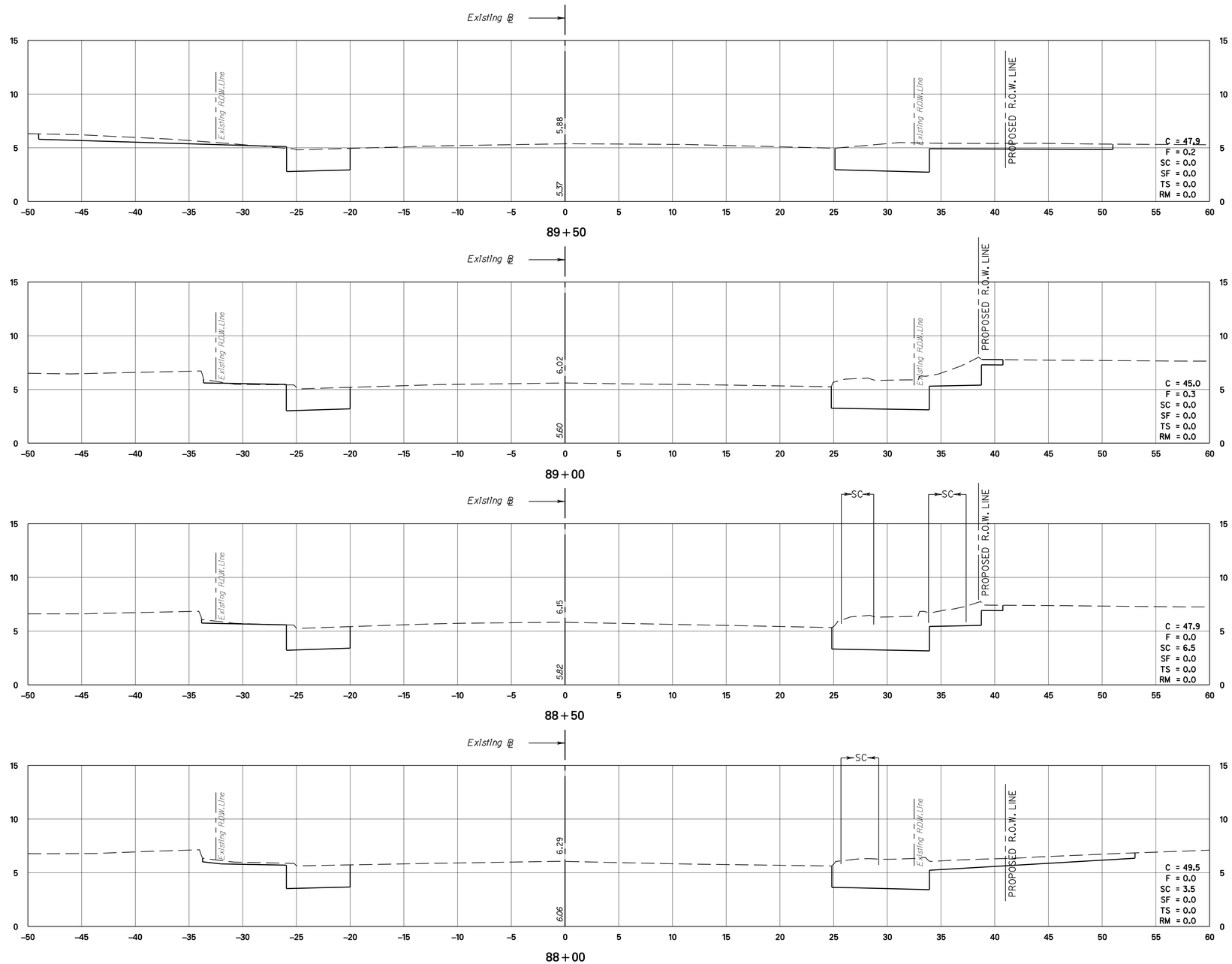

ROUTE 46 B.L.
STATION 88+00 TO STATION 89+50
SCALE IN FEET
5′ 0 5′ 10′

X-02
X-17

NEW JERSEY DEPARTMENT OF TRANSPORTATION

CROSS SECTIONS

ROUTE U.S. 46 LITTLE FERRY CIRCLE

CONTRACT NO. 069950373

PARSONS BRINCKERHOFF, INC.
CERTIFICATION OF AUTHORIZATION NO. 24GA28029800

MICHAEL D. HELMLINGER
N.J. PROFESSIONAL ENGINEER NO. 24GE03812100

111

PARSONS BRINCKERHOFF CADD DATA

OPERATOR	HeNg	QUEUE	$$$$QUEUE$$$$
PLOT DATE	06-MAR-2013 15:34		
PENTABLE	pentable=ehdot.tbl		
DESIGN FILE	T:\20063\xs02.dgn		

STATE	FEDERAL PROJECT NO.
N.J.	

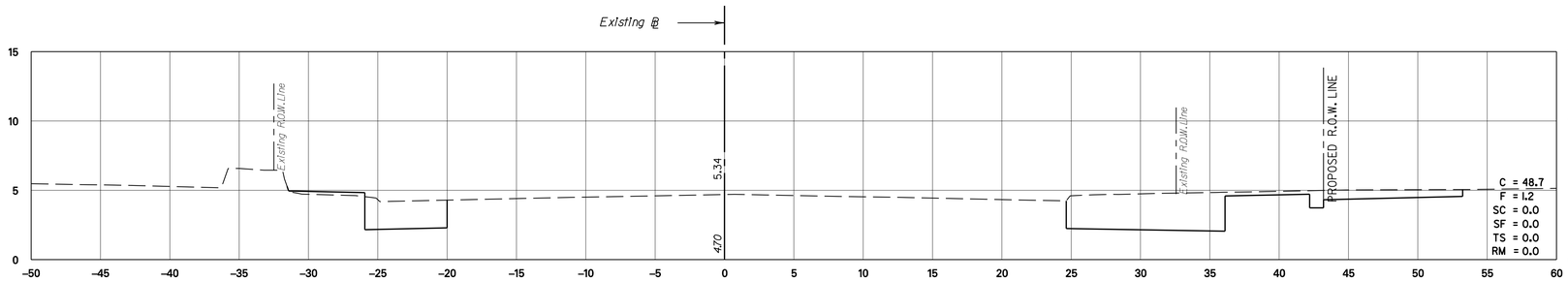

91+50

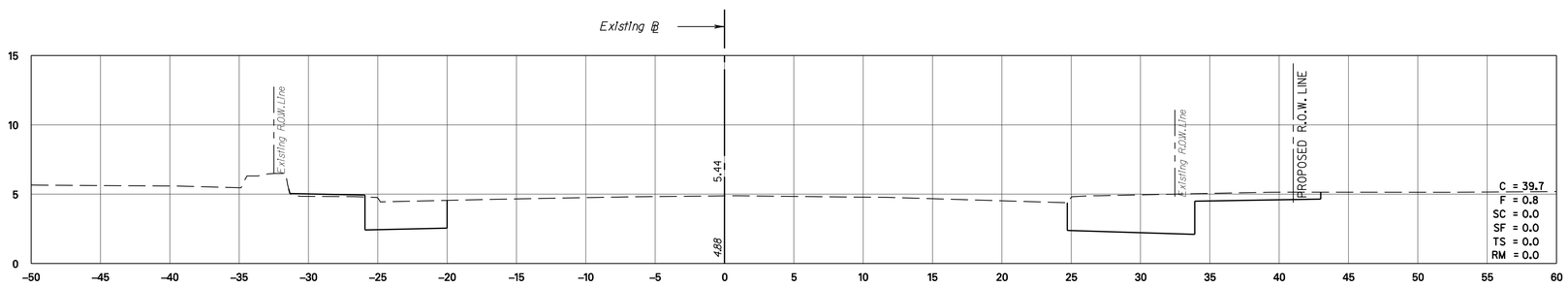

91+00

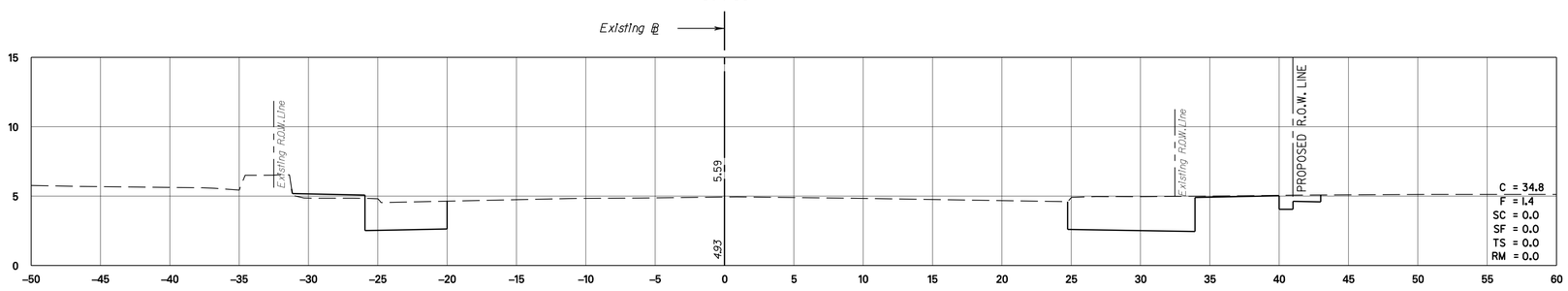

90+50

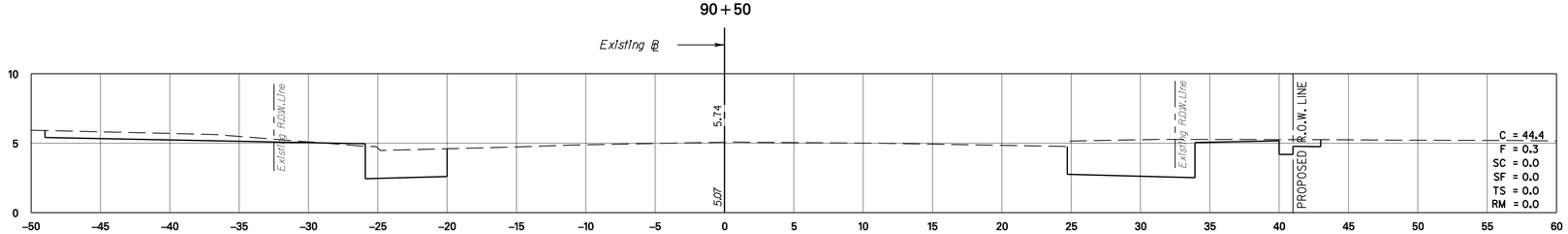

90+00

ROUTE 46 B.L.
STATION 90+00 TO STATION 91+50

SCALE IN FEET
5′ 0 5′ 10′

X-03
X-17

NEW JERSEY DEPARTMENT OF TRANSPORTATION

CROSS SECTIONS

ROUTE U.S. 46 LITTLE FERRY CIRCLE

CONTRACT NO. 069950373

PARSONS BRINCKERHOFF, INC.
CERTIFICATION OF AUTHORIZATION NO. 24GA28029800

MICHAEL D. HELMLINGER
N.J. PROFESSIONAL ENGINEER NO. 24GE03812100

PARSONS BRINCKERHOFF CADD DATA

OPERATOR	HeNg	QUEUE	$$$$QUEUE$$$$
PLOT DATE	06-MAR-2013 15:34		
PENTABLE	pentable=endot.tbl		
DESIGN FILE	T:\20063\xs03.dgn		

STATE	FEDERAL PROJECT NO.
N.J.	

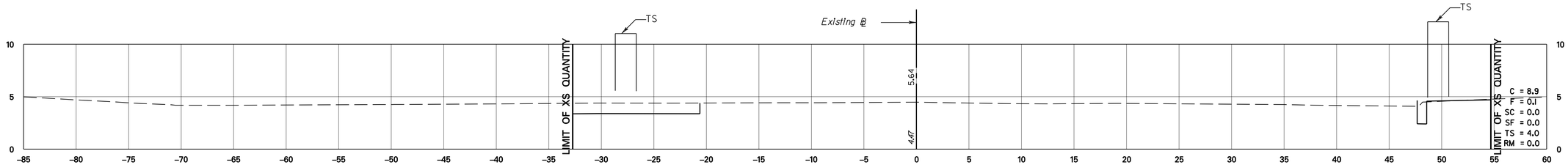

93+00

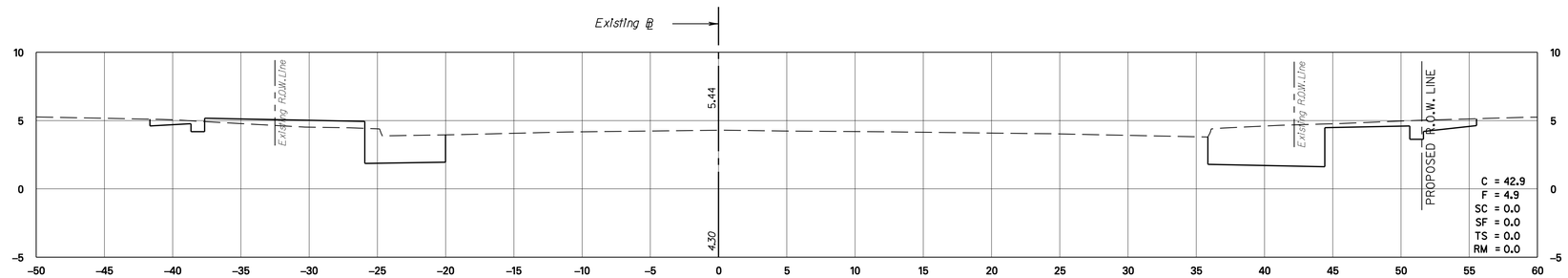

92+50

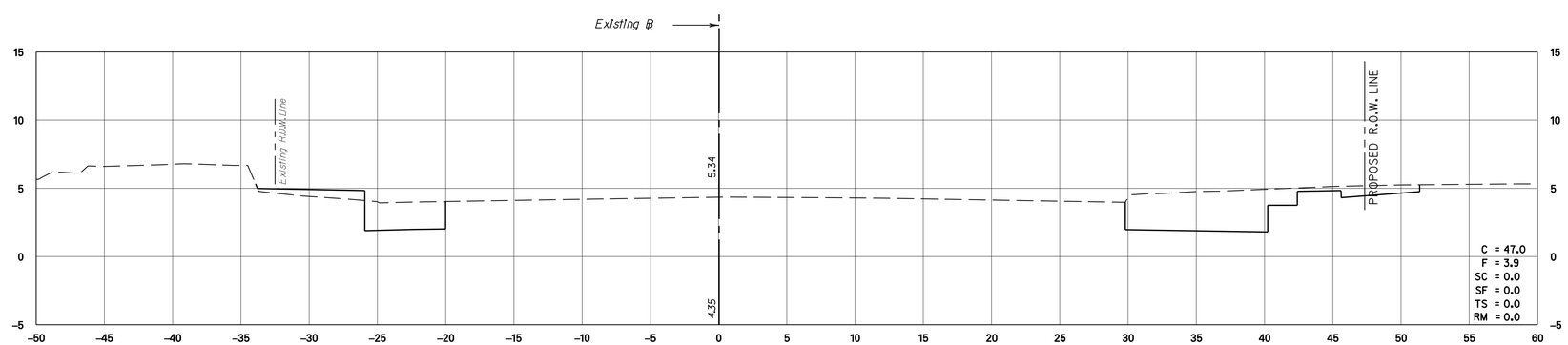

92+00

ROUTE 46 B.L.
STATION 92+00 TO STATION 93+00
SCALE IN FEET
5′ 0 5′ 10′

X-04
X-17

NEW JERSEY DEPARTMENT OF TRANSPORTATION

CROSS SECTIONS

ROUTE U.S. 46 LITTLE FERRY CIRCLE

CONTRACT NO. 069950373

PARSONS BRINCKERHOFF, INC.
CERTIFICATION OF AUTHORIZATION NO. 24GA28029800

MICHAEL D. HELMLINGER
N.J. PROFESSIONAL ENGINEER NO. 24GE03812100

PARSONS BRINCKERHOFF CADD DATA

OPERATOR	HeNg	QUEUE	$$$$QUEUE$$$$
PLOT DATE	06-MAR-2013 15:34		
PENTABLE	pentable=ehdot.tbl		
DESIGN FILE	T:\20063\xs04.dgn		

STATE	FEDERAL PROJECT NO.
N.J.	

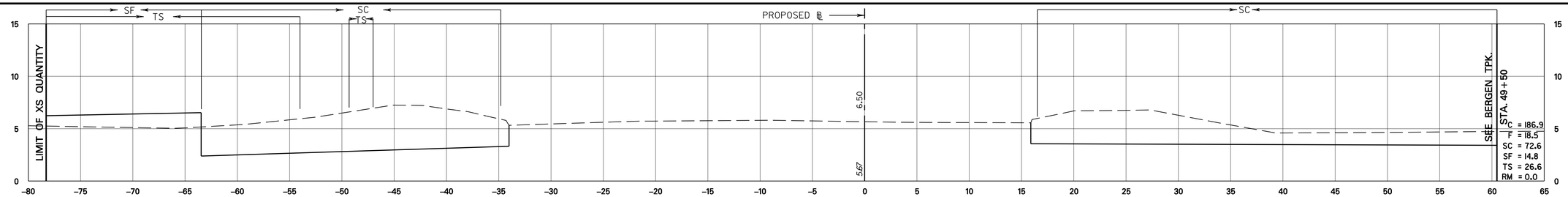

95+00

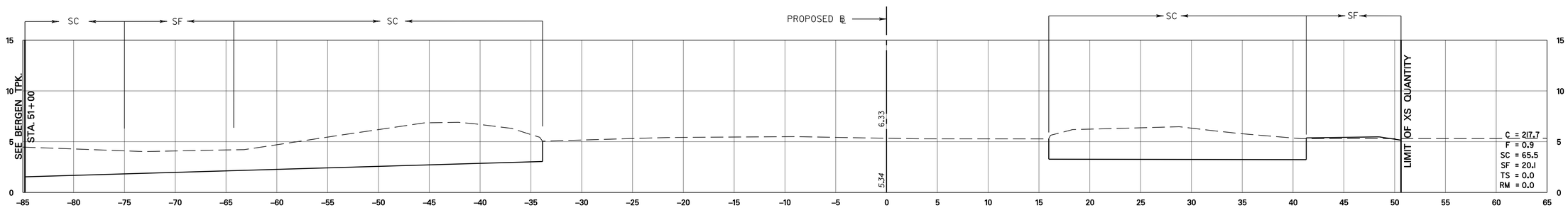

94+50

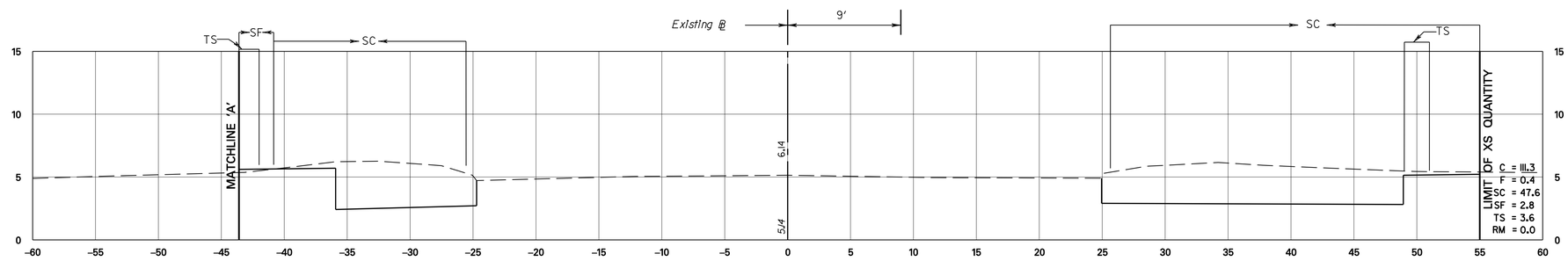

94+00

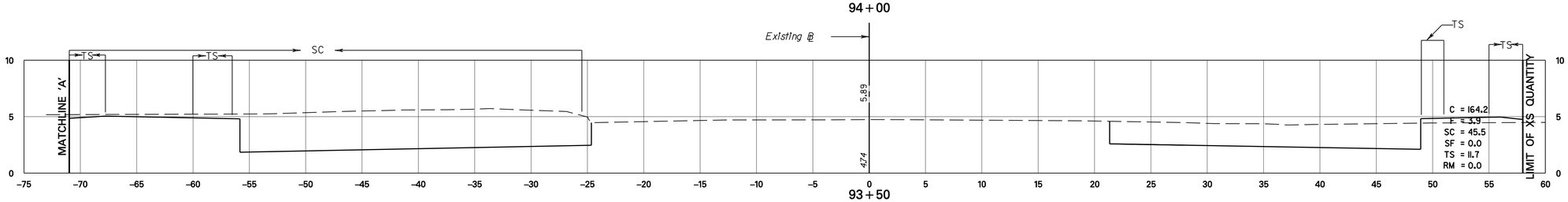

93+50

ROUTE 46 B.L.
STATION 93+50 TO STATION 95+00
SCALE IN FEET
5' 0 5' 10'

X-05
X-17

NEW JERSEY DEPARTMENT OF TRANSPORTATION

CROSS SECTIONS

ROUTE U.S. 46 LITTLE FERRY CIRCLE

CONTRACT NO. 069950373

PARSONS BRINCKERHOFF, INC.
CERTIFICATION OF AUTHORIZATION NO. 24GA28029800

MICHAEL D. HELMLINGER
N.J. PROFESSIONAL ENGINEER NO. 24GE03812100

PARSONS BRINCKERHOFF CADD DATA

OPERATOR	HeNg	QUEUE $$$$$QUEUE$$$$
PLOT DATE	06-MAR-2013 15:34	
PENTABLE	pentable=ehdot.tbl	
DESIGN FILE	T:\20063\xs05.dgn	

STATE	FEDERAL PROJECT NO.
N.J.	

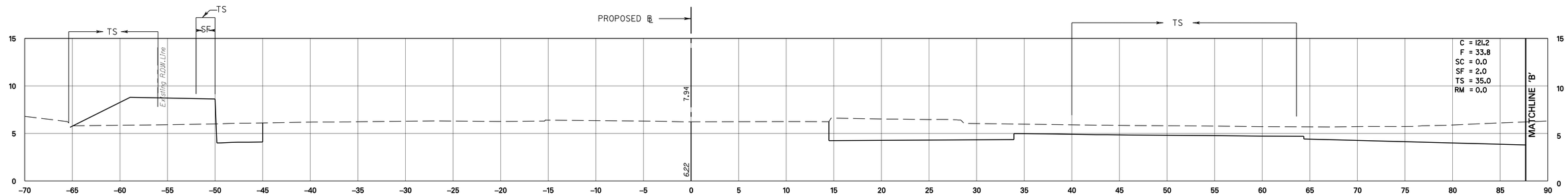

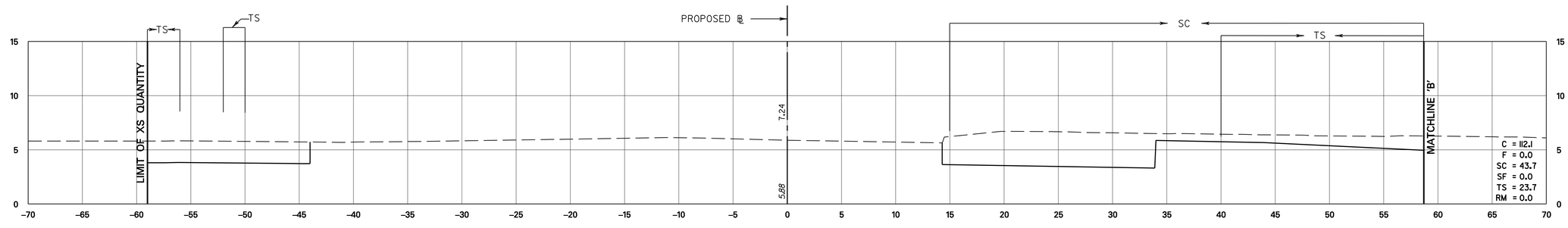

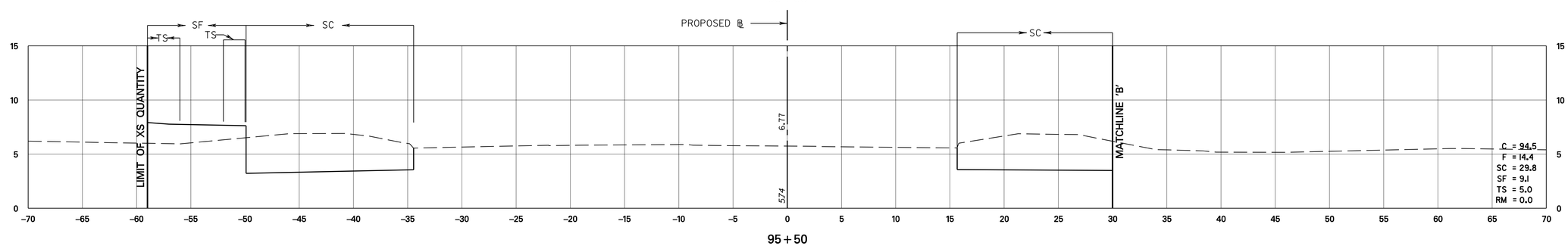

ROUTE 46 B.L.
STATION 95+50 TO STATION 96+50

SCALE IN FEET

5′ 0 5′ 10′

X-06
X-17

NEW JERSEY DEPARTMENT OF TRANSPORTATION

CROSS SECTIONS

ROUTE U.S. 46 LITTLE FERRY CIRCLE

CONTRACT NO. 069950373

PARSONS BRINCKERHOFF, INC.
CERTIFICATION OF AUTHORIZATION NO. 24GA28029800

MICHAEL D. HELMLINGER
N.J. PROFESSIONAL ENGINEER NO. 24GE03812100

PARSONS BRINCKERHOFF CADD DATA

OPERATOR	HeNg	QUEUE $$$$QUEUE$$$$
PLOT DATE	06-MAR-2013 15:34	
PENTABLE	pentable=ehdot.tbl	
DESIGN FILE	T:\20063\xs06.dgn	

STATE	FEDERAL PROJECT NO.
N.J.	

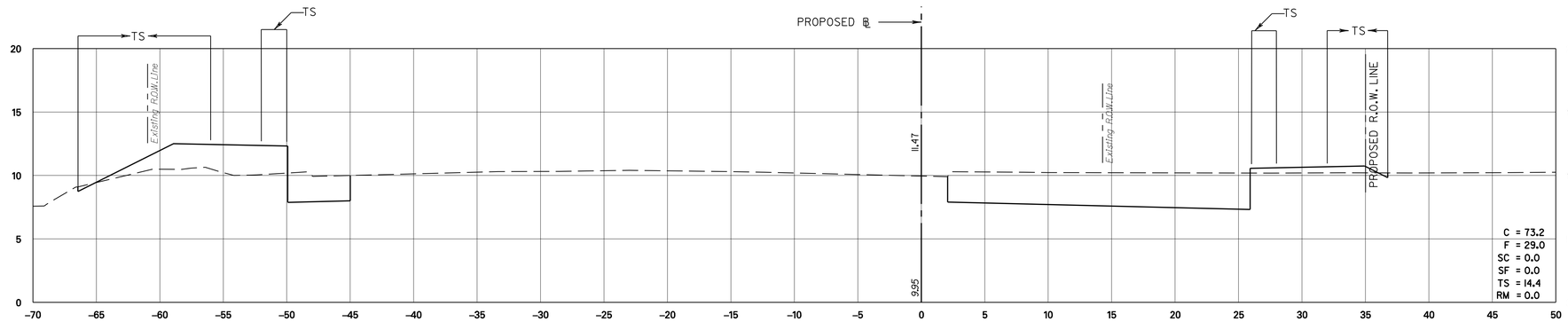

98+00

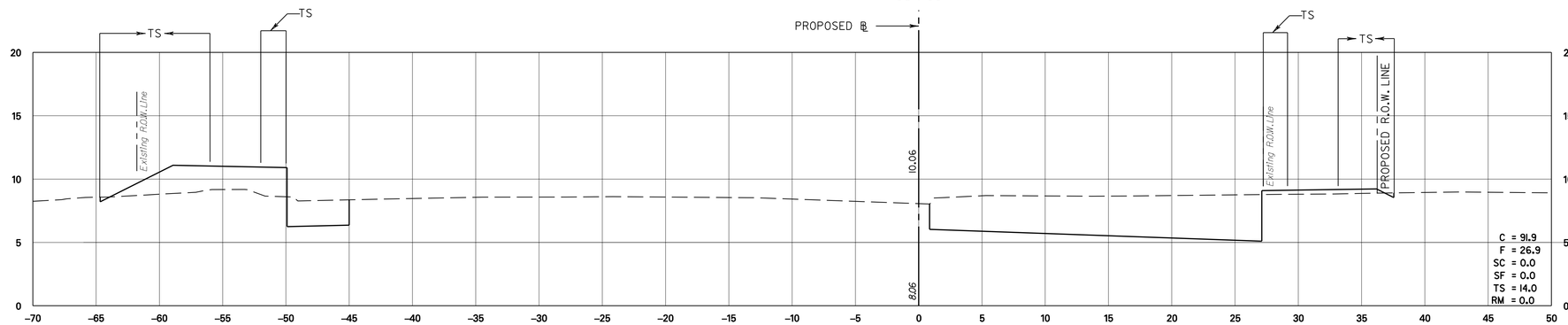

97+50

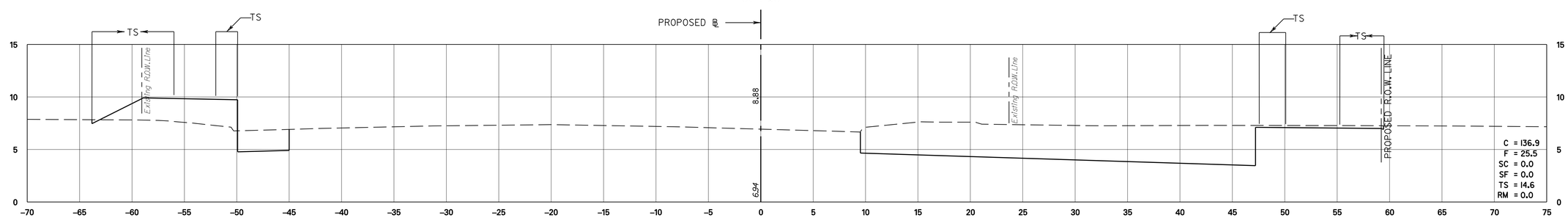

97+00

ROUTE 46 B.L.
STATION 97+00 TO STATION 98+00

SCALE IN FEET
5′ 0 5′ 10′

X-07
X-17

NEW JERSEY DEPARTMENT OF TRANSPORTATION

CROSS SECTIONS

ROUTE U.S. 46 LITTLE FERRY CIRCLE

CONTRACT NO. 069950373

PARSONS BRINCKERHOFF, INC.
CERTIFICATION OF AUTHORIZATION NO. 24GA28029800

MICHAEL D. HELMLINGER
N.J. PROFESSIONAL ENGINEER NO. 24GE03812100

PARSONS BRINCKERHOFF CADD DATA

OPERATOR	HeNg	QUEUE $$$$QUEUE$$$$
PLOT DATE	06-MAR-2013 15:34	
PENTABLE	pentable=ehdot.tbl	
DESIGN FILE	T:\20063\xs07.dgn	

STATE	FEDERAL PROJECT NO.
N.J.	

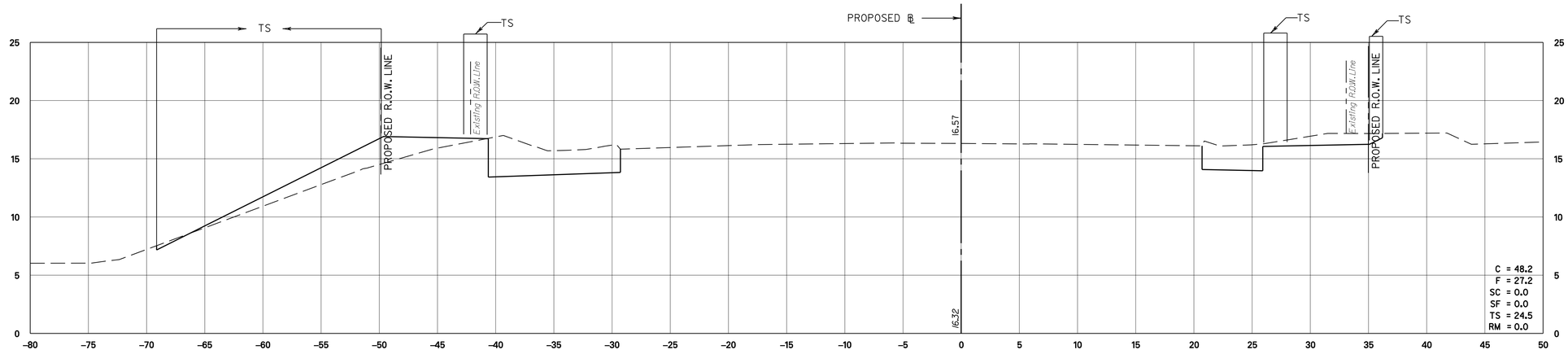

99+50

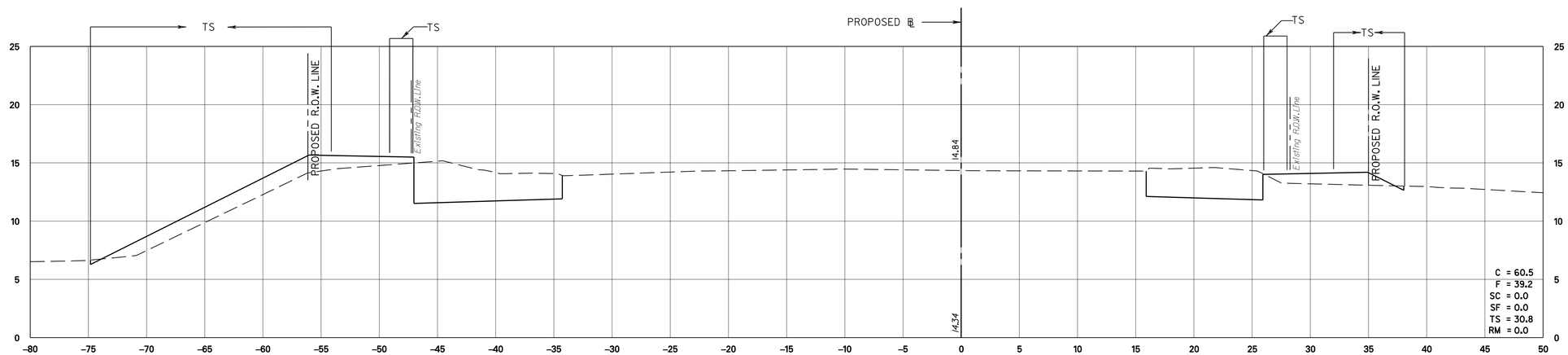

99+00

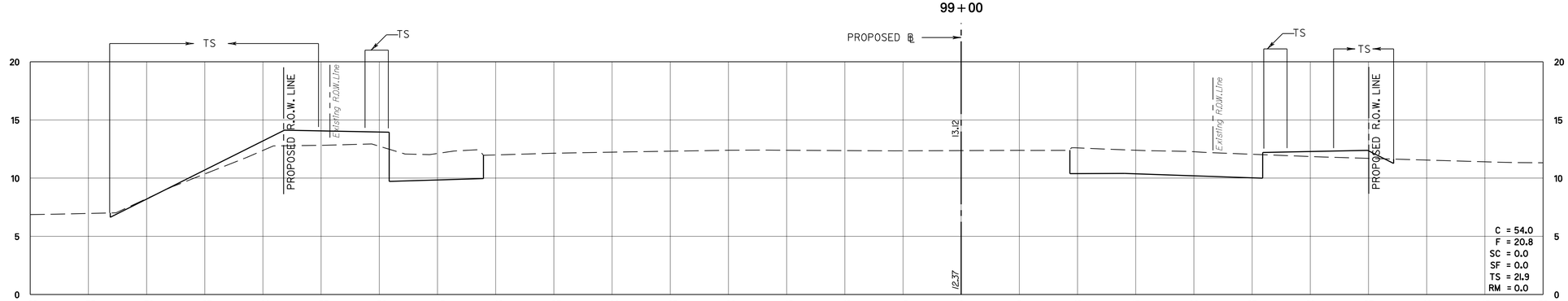

98+50

ROUTE 46 B.L.
STATION 98+50 TO STATION 99+50
SCALE IN FEET
5′ 0 5′ 10′

X-08
X-17

NEW JERSEY DEPARTMENT OF TRANSPORTATION

CROSS SECTIONS

ROUTE U.S. 46 LITTLE FERRY CIRCLE

CONTRACT NO. 069950373

PARSONS BRINCKERHOFF, INC.
CERTIFICATION OF AUTHORIZATION NO. 24GA28029800

MICHAEL D. HELMLINGER
N.J. PROFESSIONAL ENGINEER NO. 24GE03812100

PARSONS BRINCKERHOFF CADD DATA

OPERATOR	HeNg	QUEUE	$$$$QUEUE$$$$
PLOT DATE	06-MAR-2013 15:34		
PENTABLE	pentable=endot.tbl		
DESIGN FILE	T:\20063\xs08.dgn		

STATE	FEDERAL PROJECT NO.
N.J.	

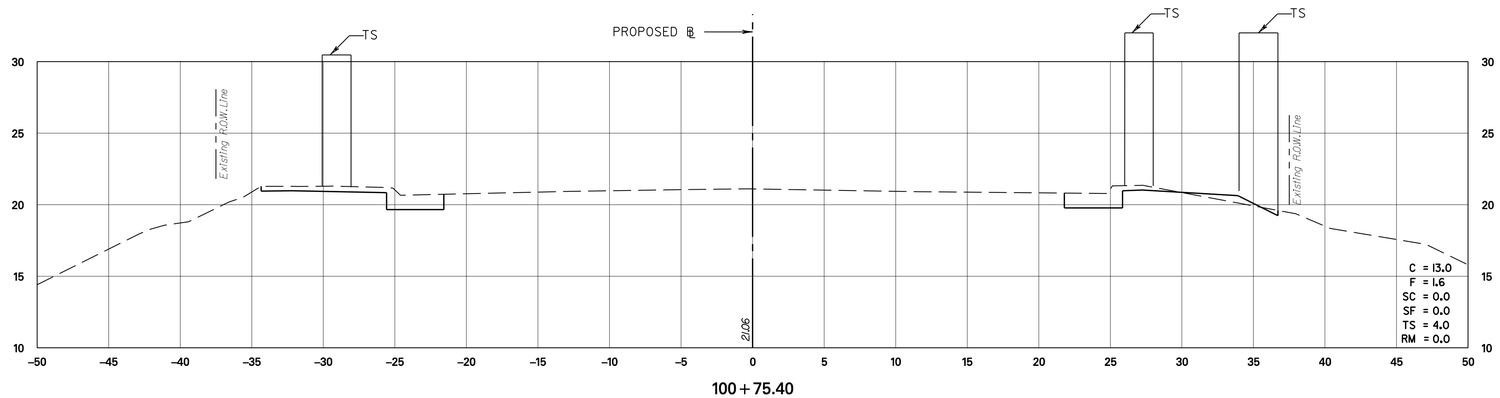

100+75.40

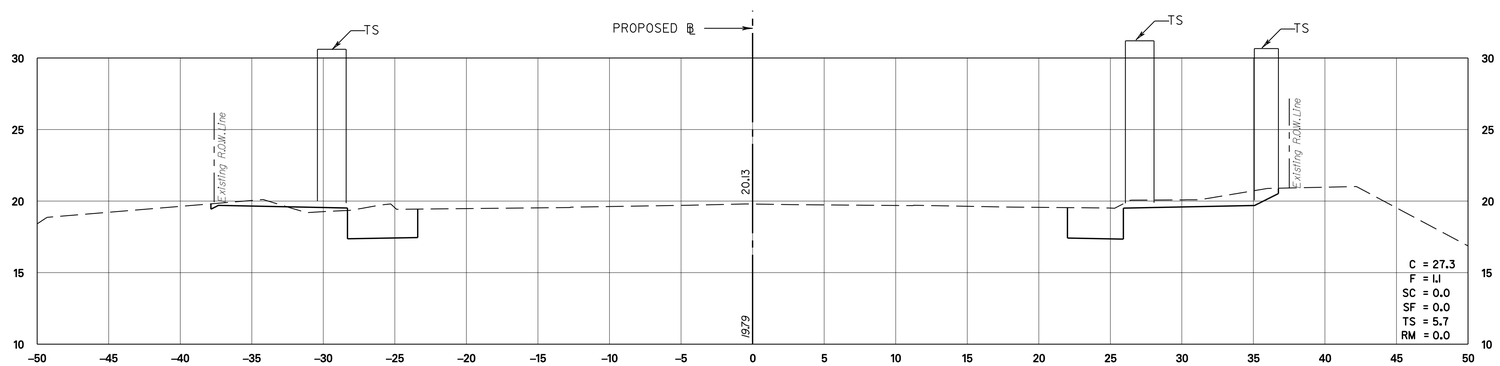

100+50

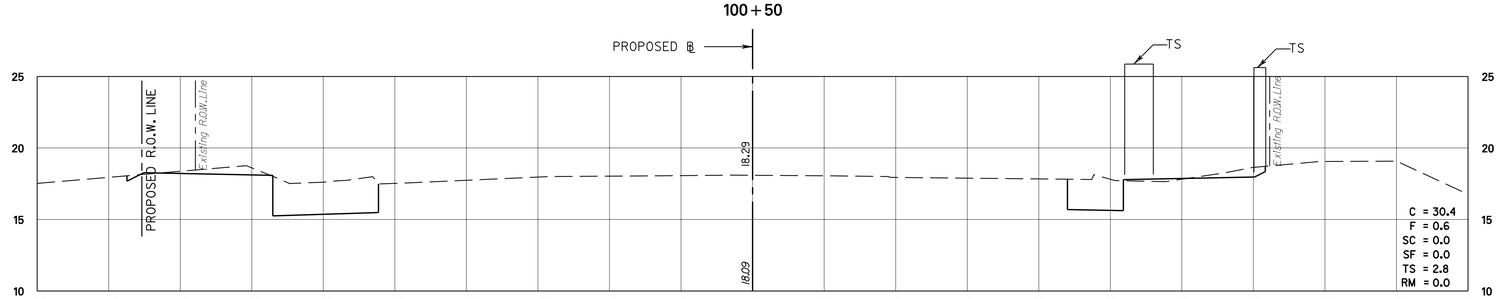

100+00

ROUTE 46 B.L.
STATION 100+00 TO STATION 100+75
SCALE IN FEET
5′ 0 5′ 10′

X-09
X-17

NEW JERSEY DEPARTMENT OF TRANSPORTATION

CROSS SECTIONS

ROUTE U.S. 46 LITTLE FERRY CIRCLE

CONTRACT NO. 069950373

PARSONS BRINCKERHOFF, INC.
CERTIFICATION OF AUTHORIZATION NO. 24GA28029800

MICHAEL D. HELMLINGER
N.J. PROFESSIONAL ENGINEER NO. 24GE03812100

PARSONS BRINCKERHOFF CADD DATA

OPERATOR	HeNg	QUEUE	$$$$QUEUE$$$$
PLOT DATE	06-MAR-2013 15:34		
PENTABLE	pentable=ehdot.tbl		
DESIGN FILE	T:\20063\xs09.dgn		

STATE	FEDERAL PROJECT NO.
N.J.	

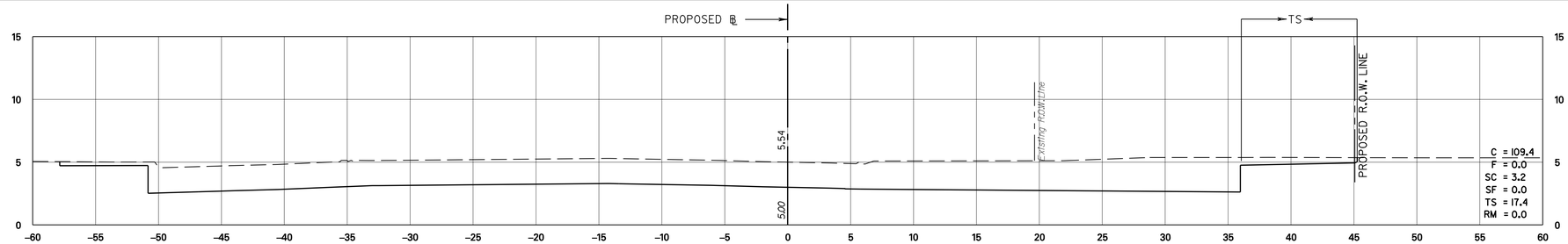

47+50

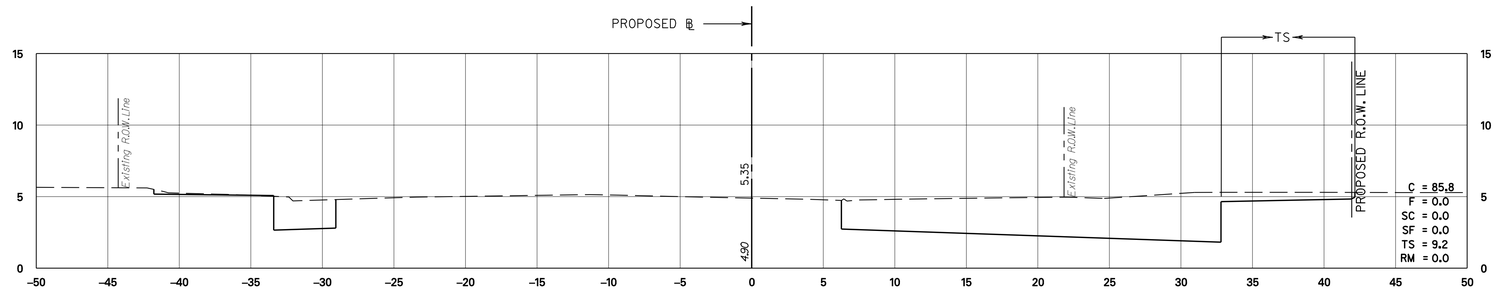

47+00

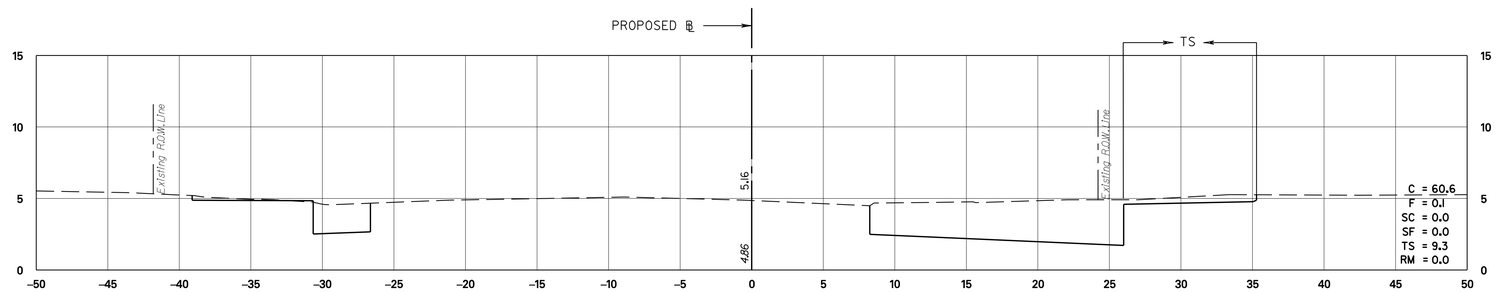

46+50

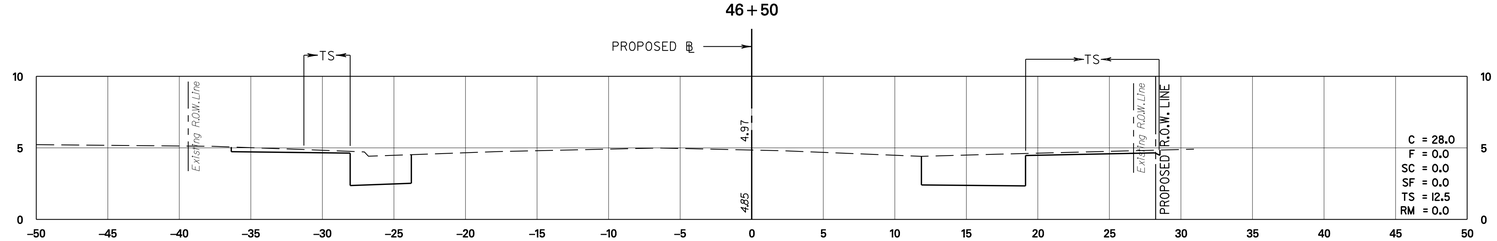

46+00

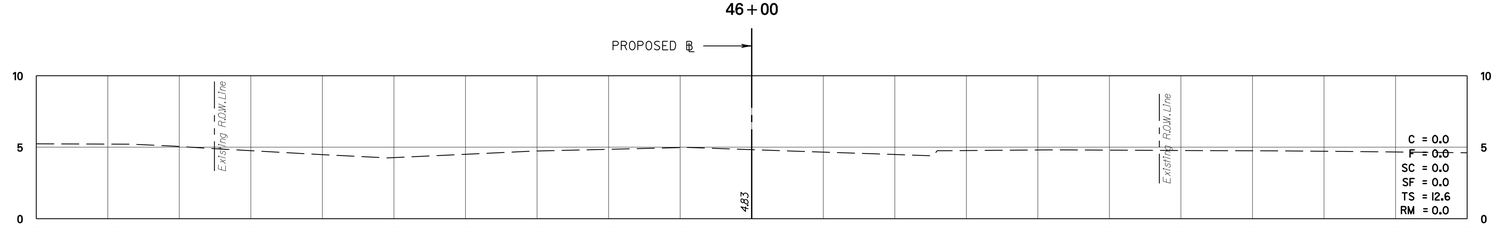

45+60

BERGEN TPK. B.L.
STATION 45+60 TO STATION 47+50

SCALE IN FEET
5′ 0 5′ 10′

X-10
X-17

NEW JERSEY DEPARTMENT OF TRANSPORTATION

CROSS SECTIONS

ROUTE U.S. 46 LITTLE FERRY CIRCLE

CONTRACT NO. 069950373

PARSONS BRINCKERHOFF, INC.
CERTIFICATION OF AUTHORIZATION NO. 24GA28029800

MICHAEL D. HELMLINGER
N.J. PROFESSIONAL ENGINEER NO. 24GE03812100

PARSONS BRINCKERHOFF CADD DATA

OPERATOR	HeNg	QUEUE	$$$$QUEUE$$$$
PLOT DATE	06-MAR-2013 15:34		
PENTABLE	pentable=ehdo1.tbl		
DESIGN FILE	T:\20063\xs10.dgn		

STATE	FEDERAL PROJECT NO.
N.J.	

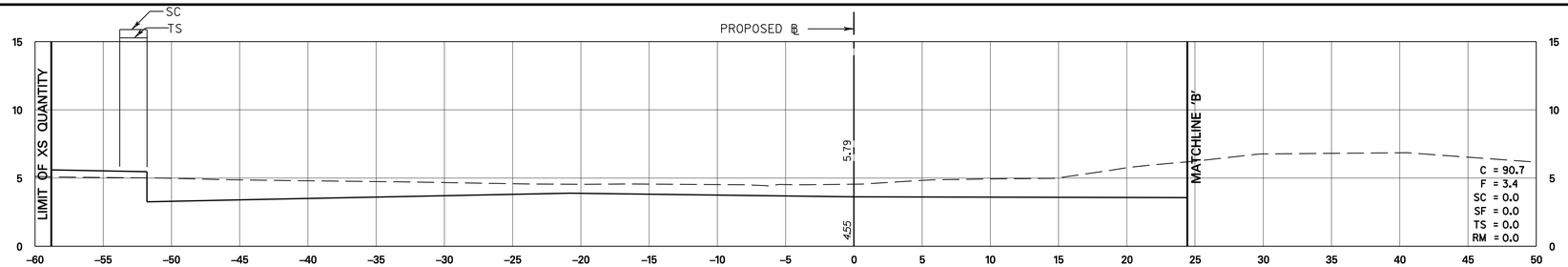

49+50

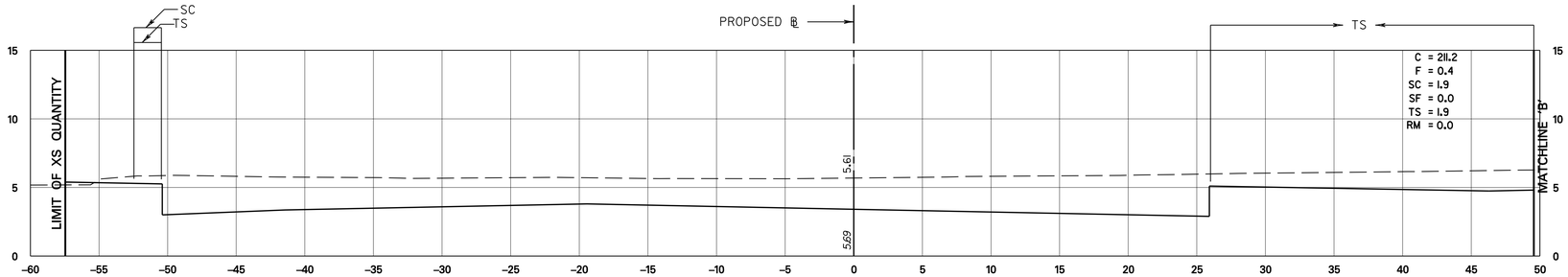

49+00

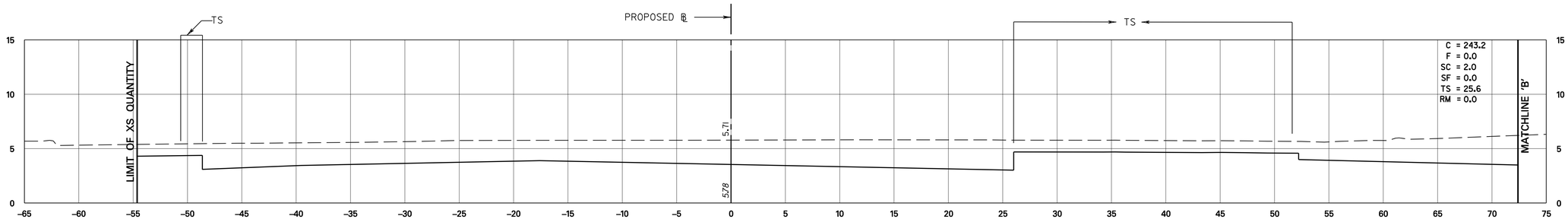

48+50

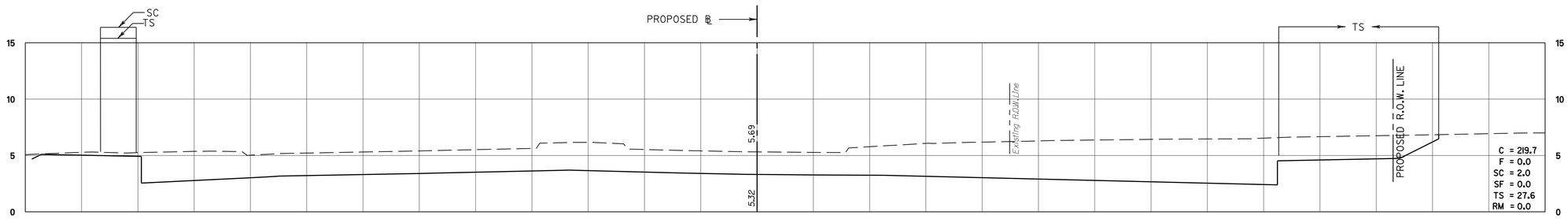

48+00

BERGEN TPK. B.L.
STATION 48+00 TO STATION 49+50

SCALE IN FEET
5' 0 5' 10'

X-11
X-17

NEW JERSEY DEPARTMENT OF TRANSPORTATION

CROSS SECTIONS

ROUTE U.S. 46 LITTLE FERRY CIRCLE

CONTRACT NO. 069950373

PARSONS BRINCKERHOFF, INC.
CERTIFICATION OF AUTHORIZATION NO. 24GA28029800

MICHAEL D. HELMLINGER
N.J. PROFESSIONAL ENGINEER NO. 24GE03812100

PARSONS BRINCKERHOFF CADD DATA

OPERATOR	HeNg	QUEUE $$$$QUEUE$$$$
PLOT DATE	06-MAR-2013 15:34	
PENTABLE	pentable=ehdot.tbl	
DESIGN FILE	T:\20063\xsld.dgn	

STATE	FEDERAL PROJECT NO.
N.J.	

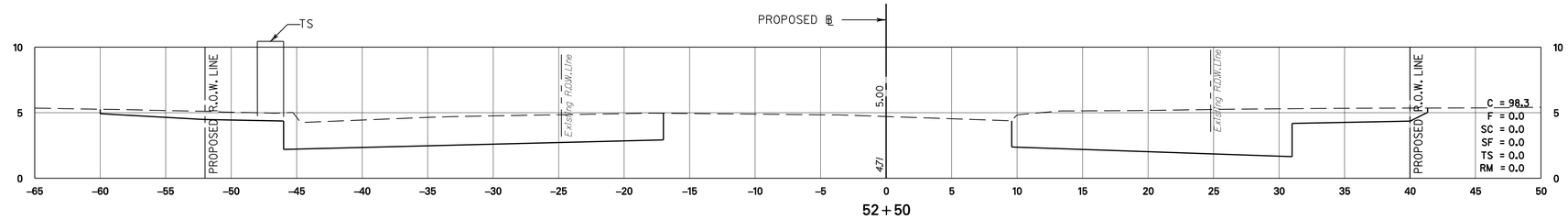

52+50

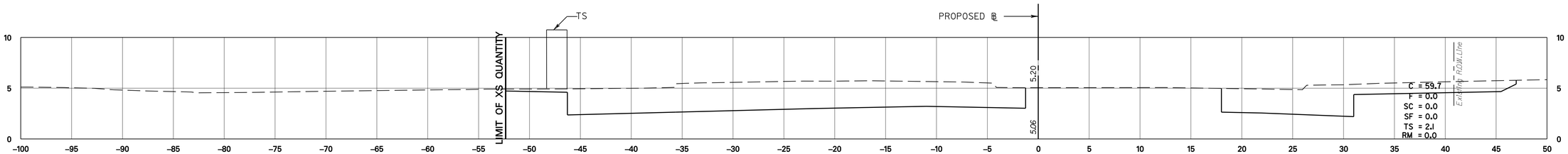

52+00

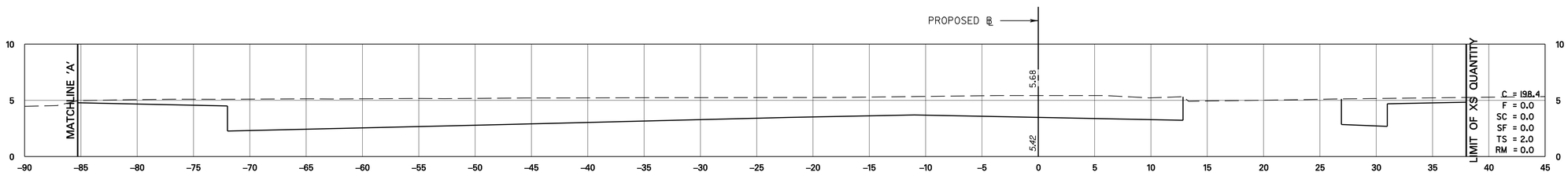

51+50

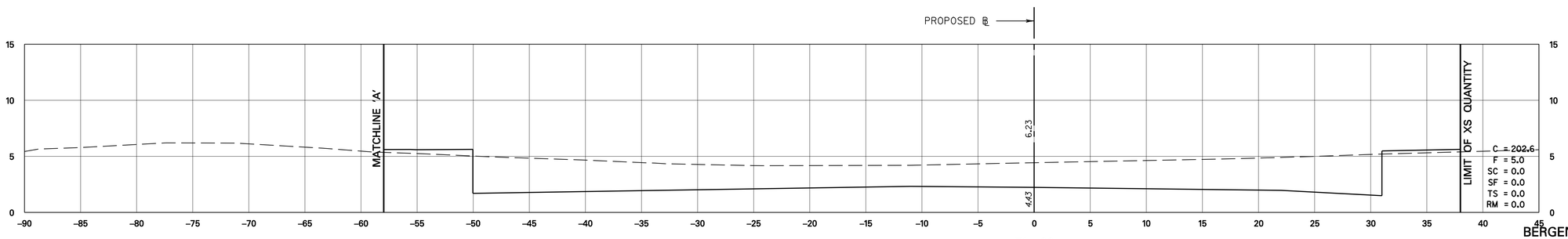

51+00

BERGEN TPK. B.L.
STATION 51+00 TO STATION 52+50

SCALE IN FEET
5′ 0 5′ 10′

X-12
X-17

NEW JERSEY DEPARTMENT OF TRANSPORTATION

CROSS SECTIONS

ROUTE U.S. 46 LITTLE FERRY CIRCLE

CONTRACT NO. 069950373

PARSONS BRINCKERHOFF, INC.
CERTIFICATION OF AUTHORIZATION NO. 24GA28029800

MICHAEL D. HELMLINGER
N.J. PROFESSIONAL ENGINEER NO. 24GE03812100

PARSONS BRINCKERHOFF CADD DATA

OPERATOR	HeNg	QUEUE	$$$$QUEUE$$$$
PLOT DATE	06-MAR-2013 15:34		
PENTABLE	pentable=ehdot.tbl		
DESIGN FILE	T:\20063\xsl2.dgn		

STATE	FEDERAL PROJECT NO.
N.J.	

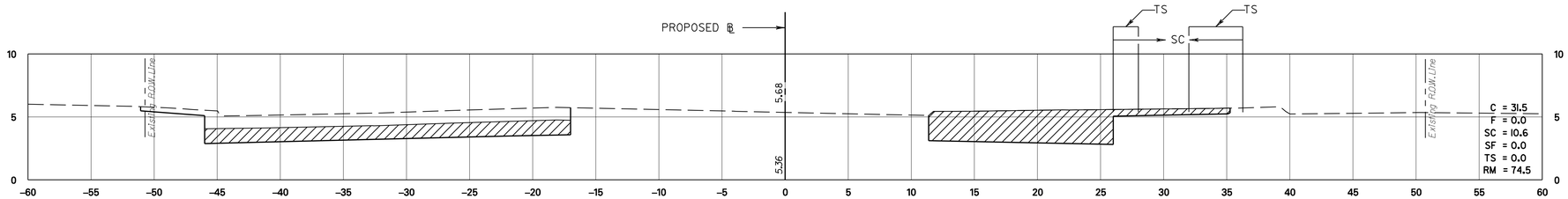

55+00

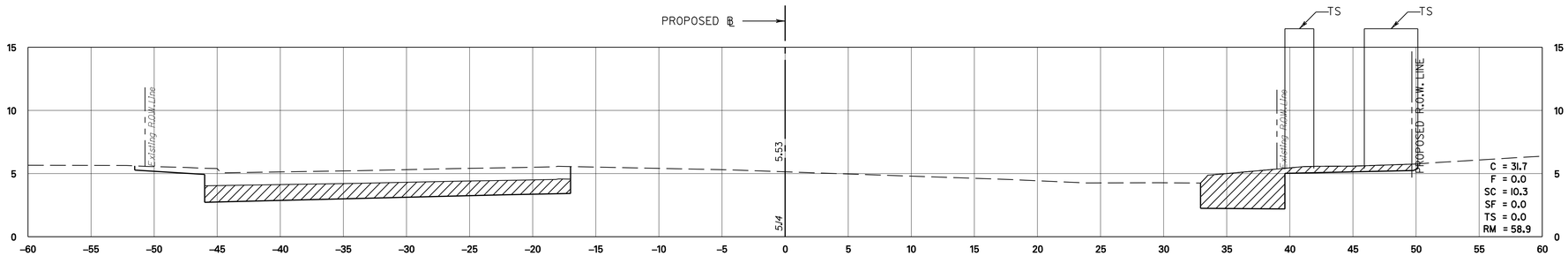

54+50

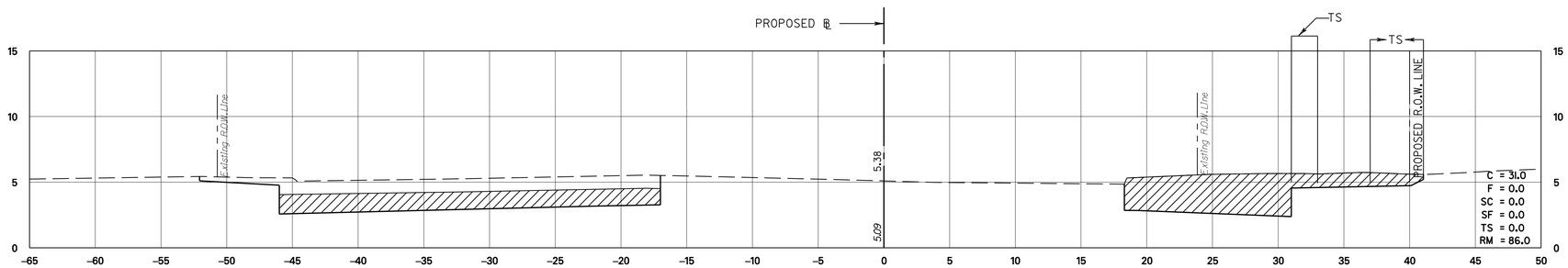

54+00

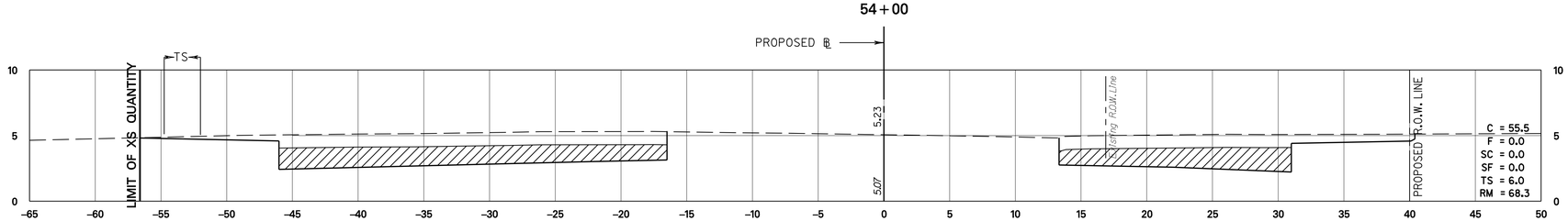

53+50

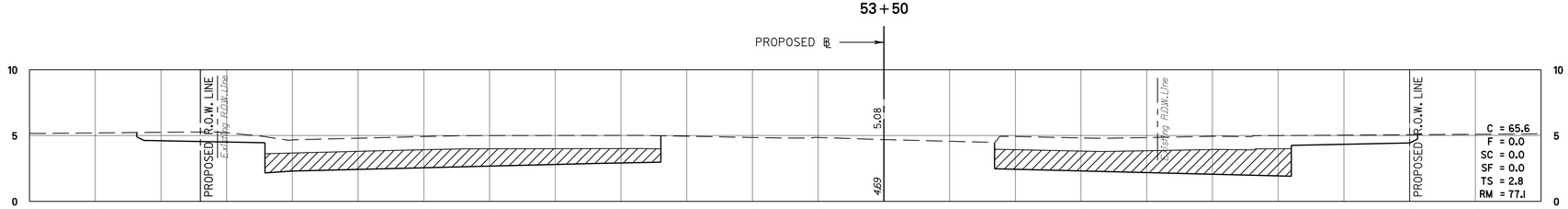

53+00

BERGEN TPK. B.L.
STATION 53+00 TO STATION 55+00

SCALE IN FEET
5′ 0 5′ 10′

X-13
X-17

NEW JERSEY DEPARTMENT OF TRANSPORTATION

CROSS SECTIONS

ROUTE U.S. 46 LITTLE FERRY CIRCLE

CONTRACT NO. 069950373

PARSONS BRINCKERHOFF, INC.
CERTIFICATION OF AUTHORIZATION NO. 24GA28029800

MICHAEL D. HELMLINGER
N.J. PROFESSIONAL ENGINEER NO. 24GE03812100

PARSONS BRINCKERHOFF CADD DATA

OPERATOR	HeNg	QUEUE	$$$$QUEUE$$$$
PLOT DATE	06-MAR-2013 15:34		
PENTABLE	pentable=ehdo1.tbl		
DESIGN FILE	T:\20063\xs13.dgn		

STATE	FEDERAL PROJECT NO.
N.J.	

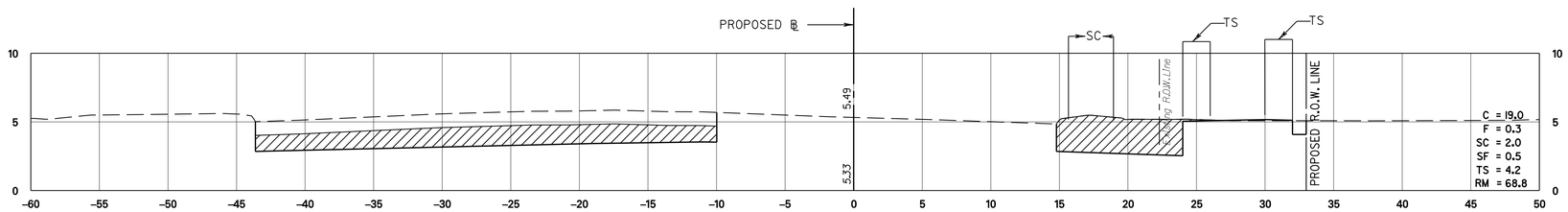

57+00

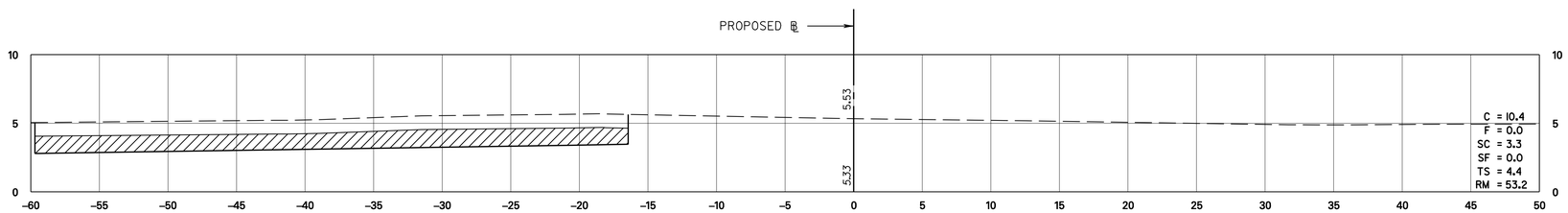

56+50

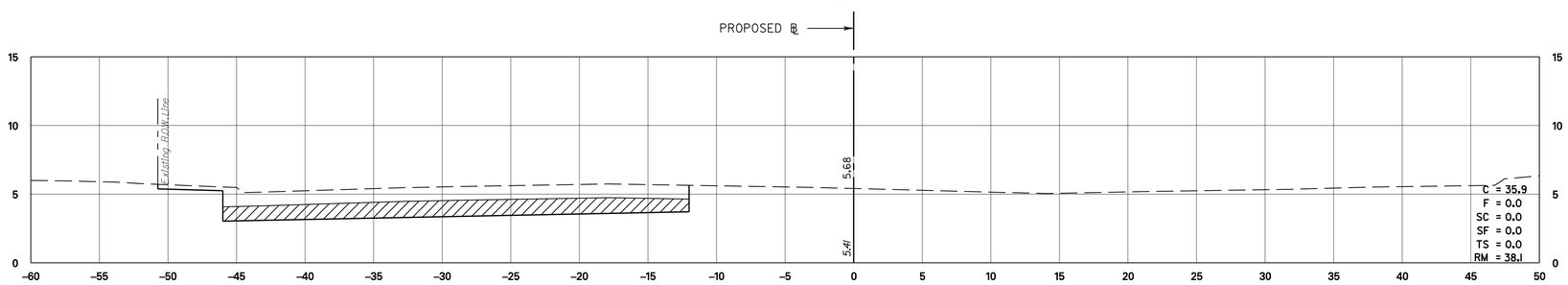

56+00

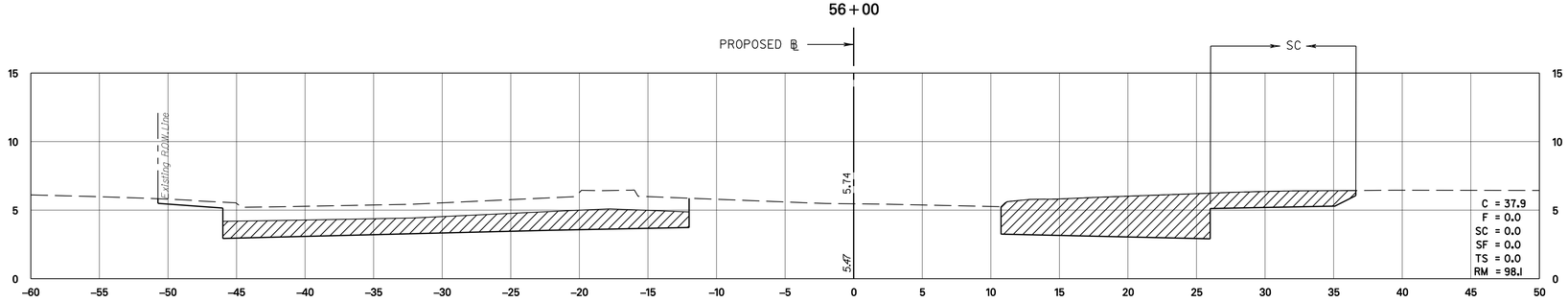

55+50

BERGEN TPK. B.L.
STATION 55+50 TO STATION 57+00

SCALE IN FEET
5′ 0 5′ 10′

X-14
X-17

NEW JERSEY DEPARTMENT OF TRANSPORTATION

CROSS SECTIONS

ROUTE U.S. 46 LITTLE FERRY CIRCLE

CONTRACT NO. 069950373

PARSONS BRINCKERHOFF, INC.
CERTIFICATION OF AUTHORIZATION NO. 24GA28029800

MICHAEL D. HELMLINGER
N.J. PROFESSIONAL ENGINEER NO. 24GE03812100

PARSONS BRINCKERHOFF CADD DATA

OPERATOR	HeNg	QUEUE $$$$QUEUE$$$$
PLOT DATE	06-MAR-2013 15:34	
PENTABLE	pentable=ehdot.tbl	
DESIGN FILE	T:\20063\xsl4.dgn	

STATE	FEDERAL PROJECT NO.
N.J.	

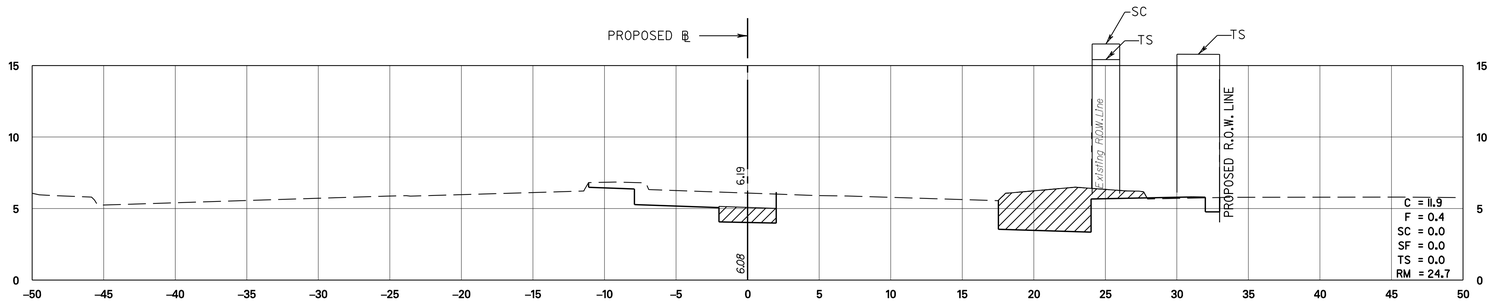

59+00

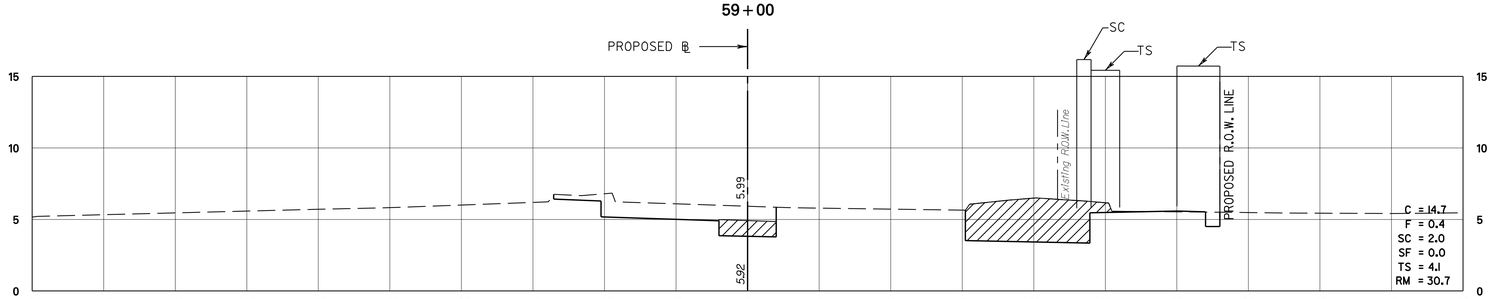

58+50

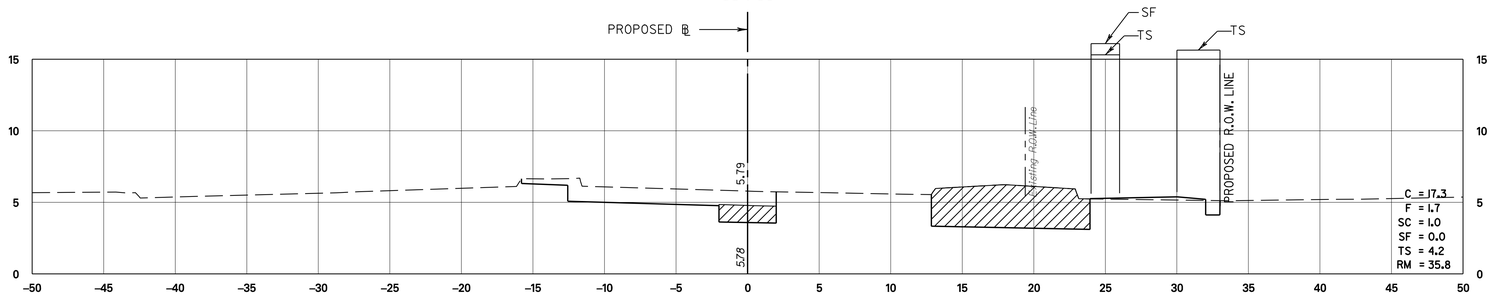

58+00

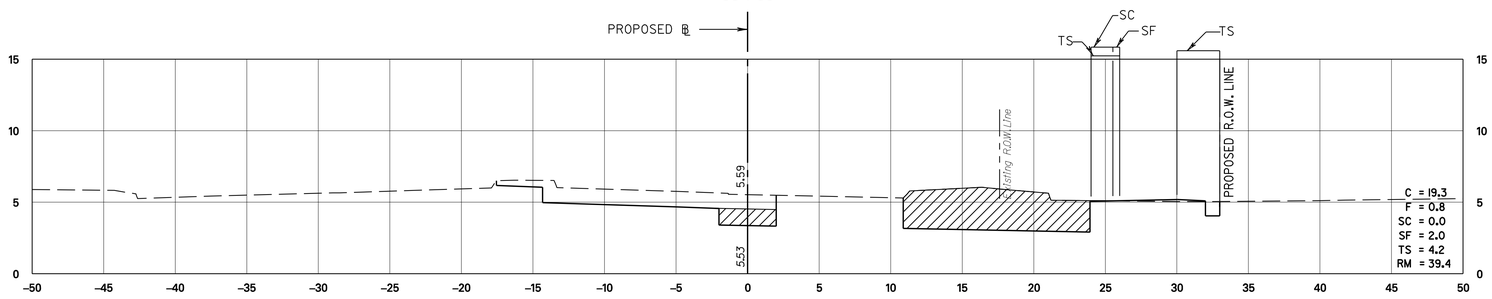

57+50

BERGEN TPK. B.L.
STATION 57+50 TO STATION 59+00

SCALE IN FEET
5′ 0 5′ 10′

X-15
X-17

NEW JERSEY DEPARTMENT OF TRANSPORTATION

CROSS SECTIONS

ROUTE U.S. 46 LITTLE FERRY CIRCLE

CONTRACT NO. 069950373

PARSONS BRINCKERHOFF, INC.
CERTIFICATION OF AUTHORIZATION NO. 24GA28029800

MICHAEL D. HELMLINGER
N.J. PROFESSIONAL ENGINEER NO. 24GE03812100

124

PARSONS BRINCKERHOFF CADD DATA

OPERATOR	HeNg	QUEUE	$$$$QUEUE$$$$
PLOT DATE	06-MAR-2013 15:34		
PENTABLE	pentable=ehdot.tbl		
DESIGN FILE	T:\20063\xsl5.dgn		

STATE	FEDERAL PROJECT NO.
N.J.	

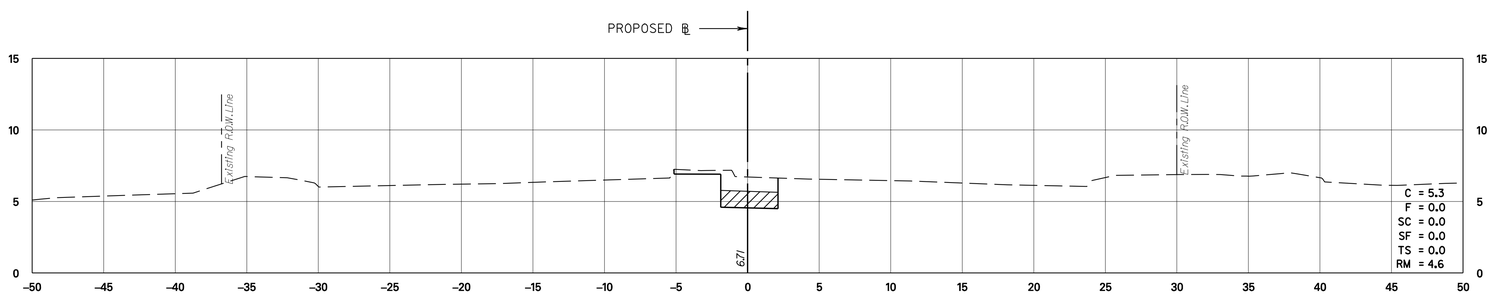

60+25

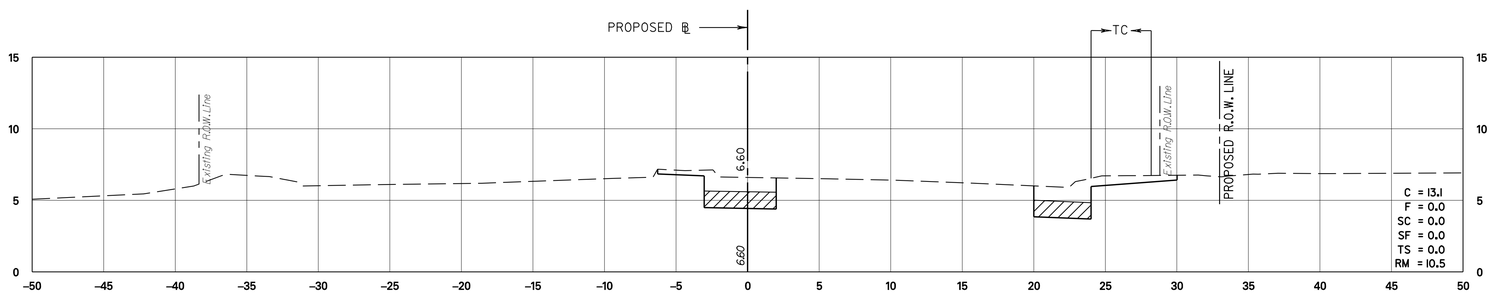

60+00

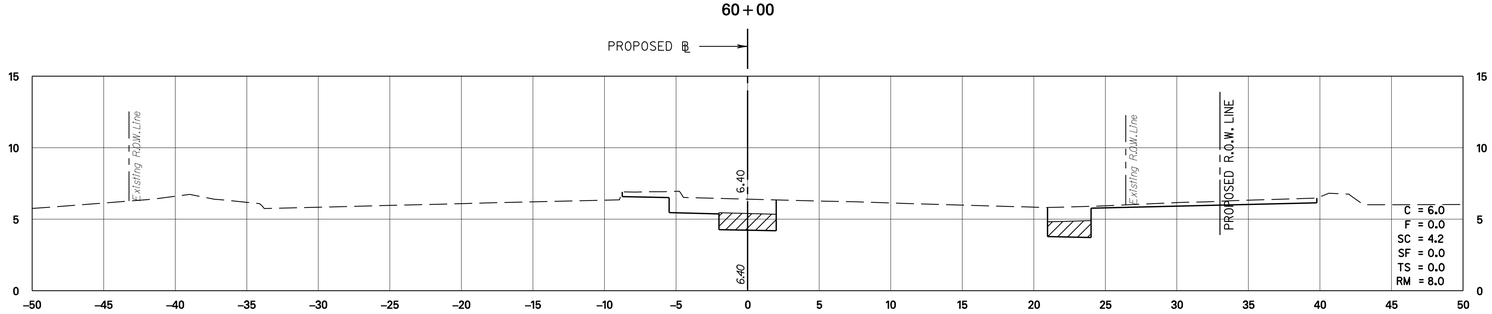

59+50

BERGEN TPK. B.L.
STATION 59+50 TO STATION 60+25

SCALE IN FEET
5′ 0 5′ 10′

X-16
X-17

NEW JERSEY DEPARTMENT OF TRANSPORTATION

CROSS SECTIONS

ROUTE U.S. 46 LITTLE FERRY CIRCLE

CONTRACT NO. 069950373

PARSONS BRINCKERHOFF, INC.
CERTIFICATION OF AUTHORIZATION NO. 24GA28029800

MICHAEL D. HELMLINGER
N.J. PROFESSIONAL ENGINEER NO. 24GE03812100

PARSONS BRINCKERHOFF CADD DATA

OPERATOR	HeNg	QUEUE	$$$$QUEUE$$$$
PLOT DATE	06-MAR-2013 15:34		
PENTABLE	pentable=ehdot.tbl		
DESIGN FILE	T:\20063\xsl6.dgn		

STATE	FEDERAL PROJECT NO.
N.J.	

EARTHWORK SUMMARY

Description	Contract Quantity
I **Excavation**	
(A) Excavated Materials	
(1) Excavation, Unclassified available for I-14 Embankement	
Excavation from Cross Sections (except for Regulated Material and/or Acid Producing Soil)	7,428 C.Y.
Excavation from Plan sheets (except for Regulated Material and/or Acid Producing Soil)	1,770 C.Y.
Excavation from Structures	170 C.Y.
Less Removal of Pavement (2,865 SY x 12" Thick)	-2,865 C.Y.
Stripping in Cuts (1,939 SY x 4" Thick)	-215 C.Y.
Total Excavation, Unclassified	6,288 C.Y.
Removal of Pavement (2,865 SY x 12" Thick)	2,865 C.Y.
Less Unsuitable Excavation Unclassified	-6,288 C.Y.
Unsuitable Removal of Pavement (2,865 SY x 12" Thick)	-2,865 C.Y.
Total	**0 C.Y.**
(2) Excavation, Regulated Material	
Excavation, Regulated from Cross Sections	1,427 C.Y.
Excavation, Regulated from Plan Sheets	1,052 C.Y.
Excavation, Regulated of pipes, inlets & other substructures	261 C.Y.
Total Excavation, Regulated Material	2,740 C.Y.
Less Unsuitable Excavation Regulated Material, Hazardous	0 C.Y.
Unsuitable Excavation Regulated Material	-2,740 C.Y.
Total	**0 C.Y.**
Disposal of Regulated Material (1,052 x 1.755 TON/CY)	4,809 TON
(3) Excavation, Acid Producing Soil available for I-14 Embankment	
Excavation, Acid Producing Soil from Cross Sections	0 C.Y.
Excavation, Acid Producing Soil from Plan Sheets	0 C.Y.
Excavation, Acid Producing Soil of pipes, inlets & other substructures	0 C.Y.
Total Excavation, Regulated Material	0 C.Y.
Less Unsuitable Excavation Acid Producing Soil	0 C.Y.
Total	**0 C.Y.**
Disposal of Acid Producing Soil (0.0 x 1.755 TON/CY)	0 TON
Total Excavated Materials Available for I-14 Embankment (Total of 1+2+3) ((0 + 0 + 0) x 0.90 shrinkage)	**0 C.Y.**
(B) I-14 Embankment Quantity Required	
Embankment from Cross Sections	488 C.Y.
Embankment from Plan Sheets	751 C.Y.
Less I-9 Soil Aggregate from Cross Sections	0 C.Y.
I-9 Soil Aggregate from Structures	0 C.Y.
I-10 Soil Aggregat from Structures	0 C.Y.
Stripping in Fill (285 SY x 4" Thick)	32 C.Y.
Total	**1,271 C.Y.**
Excavated Materials Excess (Suitable for I-14 Embankment)	**0 C.Y.**
Excavated Materials to be Borrowed (Suitable for I-14 Embankment)	**1,271 C.Y.**
II **Topsoiling**	
(A) Topsoil Available	
Stripping in Cut	215 C.Y.
Stipping in Fill	32 C.Y.
Total Stripping available for Topsoil	**247 C.Y.**
(B) Topsoil Required	
Topsoiling, 4" Thick from Cross Sections	1,910 S.Y.
Topsoiling, 4" Thick from Plan Sheets	3,161 S.Y.
Total Topsoiling 4" Thick required in SY	5,071 S.Y.
Total Topsoiling 4" Thick required in CY (5,071 SY x 4" Thick)	**563 C.Y.**
Excess Topsoil	**0 C.Y.**
Borrow Topsoil	**316 C.Y.**

SCALE IN FEET
5' 0 5' 10'

X-17
X-17

NEW JERSEY DEPARTMENT OF TRANSPORTATION

CROSS SECTIONS

ROUTE U.S. 46 LITTLE FERRY CIRCLE

CONTRACT NO. 069950373

PARSONS BRINCKERHOFF, INC.
CERTIFICATION OF AUTHORIZATION NO. 24GA28029800

MICHAEL D. HELMLINGER
N.J. PROFESSIONAL ENGINEER NO. 24GE03812100

PARSONS BRINCKERHOFF CADD DATA
OPERATOR HeNg QUEUE $$$$QUEUE$$$$
PLOT DATE 06-MAR-2013 15:34
PENTABLE pentable=ehdot.tbl
DESIGN FILE T:\20063\xsl7.dgn

CODE CRITERIA

ALL CODE REFERENCES ARE FROM THE INTERNATIONAL BUILDING CODE 2009 NEW JERSEY EDITION

DESCRIPTION	CODE REFERENCE	REQUIREMENT	PROVIDED
GENERAL			
USE GROUP SIMILAR TO:	312.1	PUMP STATION: NOT CLASSIFIED IN ANY SPECIFIC OCCUPANCY	(U) UTILITY AND MISCELLANEOUS
CONSTRUCTION TYPE:	TABLE 601	NOT SPECIFIED	TYPE III-A
NO. OF STORIES	TABLE 503	NOT SPECIFIED	2 STORIES
BUILDING AREA	TABLE 503	NOT SPECIFIED	884 SF (ABOVE GROUND) 1248.11 SF (UNDERGROUND)
SPECIAL REQUIREMENTS	CHAPTER 4 - N/A		
SPRINKLER	903.2.11	SPRINKLER NOT REQ.	SPRINKLER NOT PROVIDED
FIRE ALARM SYSTEM	907.2	FIRE ALARM NOT REQ.	FIRE ALARM PROVIDED
FIRE RESISTANCE RATING FOR TYPE IIIA BUILDING			
BUILDING ELEMENTS			
1. STRUCTURAL FRAME	TABLE 601	1 HOUR	3 HOUR
2. BEARING WALLS			
EXTERNAL	TABLE 601	2 HOURS	3 HOURS
INTERNAL	TABLE 601	1 HOUR	N/A
3. NON BEARING WALLS	TABLE 601	0 HOUR	N/A
4. FLOOR CONSTRUCTION	TABLE 601	1 HOUR	>1 HOUR
5. ROOF CONSTRUCTION	TABLE 601	1 HOUR	1 HOUR

UNMANNED PUMPING STATION IN CONJUNCTION WITH ROUTE 46 ROADWAY IMPROVEMENTS

a. USE GROUP CLASSIFICATION: U
b. LOT GROUND COVERAGE IN S.F.: 1750.33 SF (1610 SF EXCLUDING MECHANICAL BAR SCREEN CHAMBER)
c. TOTAL FLOOR AREA IN S.F.: 2,127 S.F. (GROSS)
d. TOTAL BUILDING/STRUCTURE VOLUME IN C.F.: 43,896 C.F.
e. TOTAL PLUMBING FIXTURES: 0
f. TOTAL ELECTRICAL FIXTURES, OUTLETS, AND MAJOR APPLIANCES: 43
g. DESCRIPTION OF HEATING SYSTEM: TWO (2) 23,500 BTUH (10 KW) WALL MOUNTED 480V/3 PHASE HEATERS WITH 2-STAGE THERMOSTATS
h. SOURCE OF WATER SUPPLY: MUNICIPAL WATER SYSTEM
i. MODE OF SANITARY WASTE DISPOSAL: THE PROPOSED UNMANNED PUMP STATION WILL ONLY BE VISITED ON A MONTHLY BASIS. FOR THAT REASON SANITARY SEWER IS NOT REQUIRED.
j. SPECIAL FACILITY: THE STRUCTURE WILL CONTAIN A PUMP STATION TO SERVICE STORM WATER RESULTING FROM ROUTE 46.

CC-1 CODE CRITERIA

DTL-1 / DTL-44

NEW JERSEY DEPARTMENT OF TRANSPORTATION

CONSTRUCTION DETAILS

ROUTE U.S. 46 LITTLE FERRY CIRCLE

CONTRACT NO. 069950373

STORMWATER PUMP STATION

DEWBERRY ENGINEERS INC. COA#24GA28047600
200 BROADACRES DRIVE, BLOOMFIELD NJ 07003

ERIC J. BOSCHEN
N.J. PROFESSIONAL ENGINEER NO. 24GE03853200

PARSONS BRINCKERHOFF, INC.
CERTIFICATION OF AUTHORIZATION NO. 24GA28029800

MICHAEL D. HELMLINGER
N.J. PROFESSIONAL ENGINEER NO. 24GE03812100

127

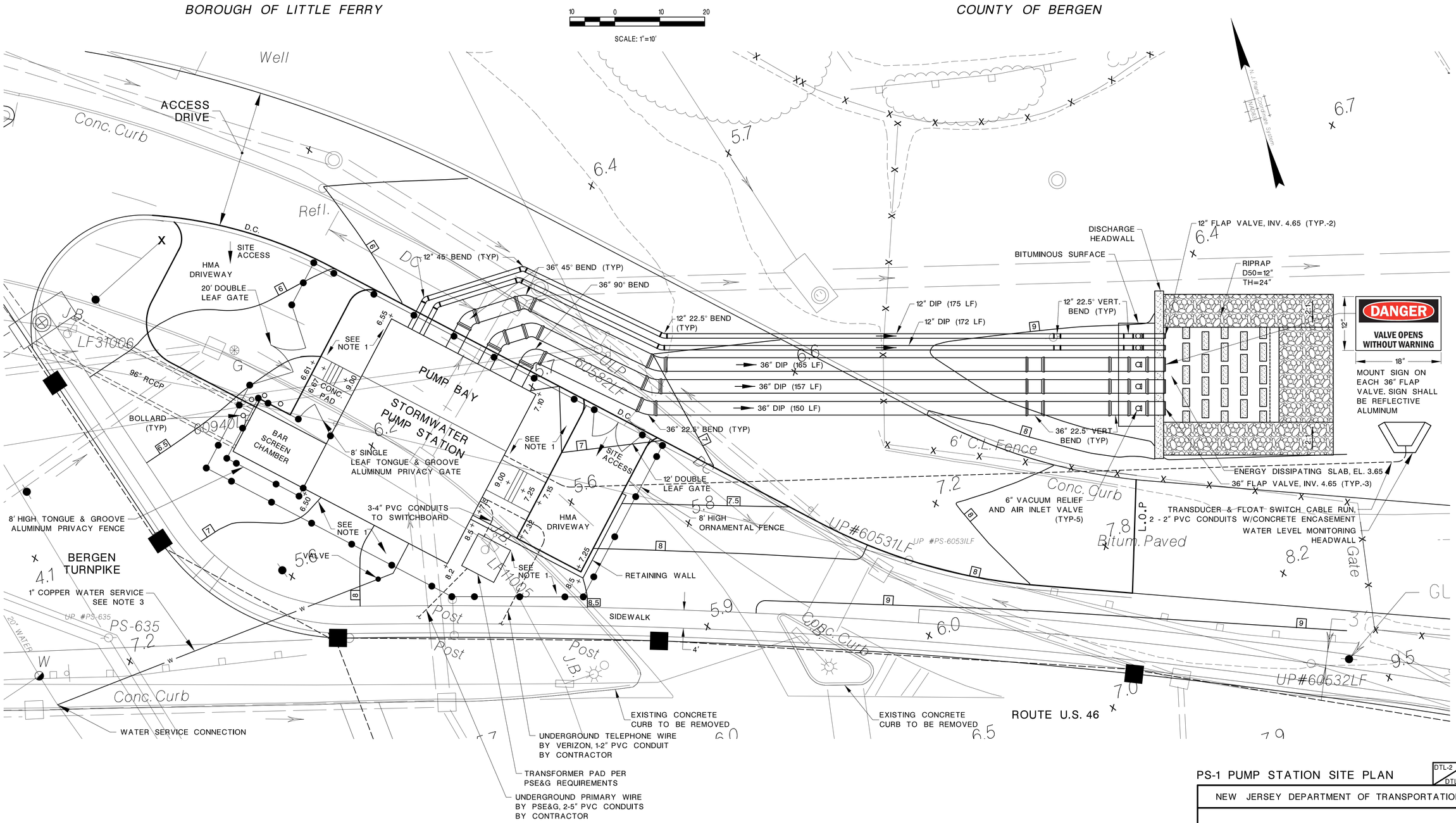

NOTE:

1. PROVIDE TOPSOILING, 4" THICK, FERTILIZING AND SEEDING TYPE A-3 WITHIN FENCE.
2. REFER TO LANDSCAPING PLANS FOR PLANTINGS.
3. PROVIDE POTABLE WATER SERVICE TO PUMPING STATION.

PS-1 PUMP STATION SITE PLAN

DTL-2 / DTL-44

NEW JERSEY DEPARTMENT OF TRANSPORTATION

CONSTRUCTION DETAILS

ROUTE U.S. 46 LITTLE FERRY CIRCLE

CONTRACT NO. 069950373

STORMWATER PUMP STATION	
DEWBERRY ENGINEERS INC. COA#24GA28047600	PARSONS BRINCKERHOFF, INC.
200 BROADACRES DRIVE, BLOOMFIELD NJ 07003	CERTIFICATION OF AUTHORIZATION NO. 24GA28029800
ERIC J. BOSCHEN	MICHAEL D. HELMLINGER
N.J. PROFESSIONAL ENGINEER NO. 24GE03853200	N.J. PROFESSIONAL ENGINEER NO. 24GE03812100

128

$$$USERNAME$$$ $$$DATE$$$ $$$$TIME$$$$ $$$$$$$PLTDRVS$$$$$$$ $$$$$$$MODEL$$$$$$$ $$$$$$WORKSPACE$$$$$$ $$$$$$$$$PROJECT$$$$$$$$$ $FILE$

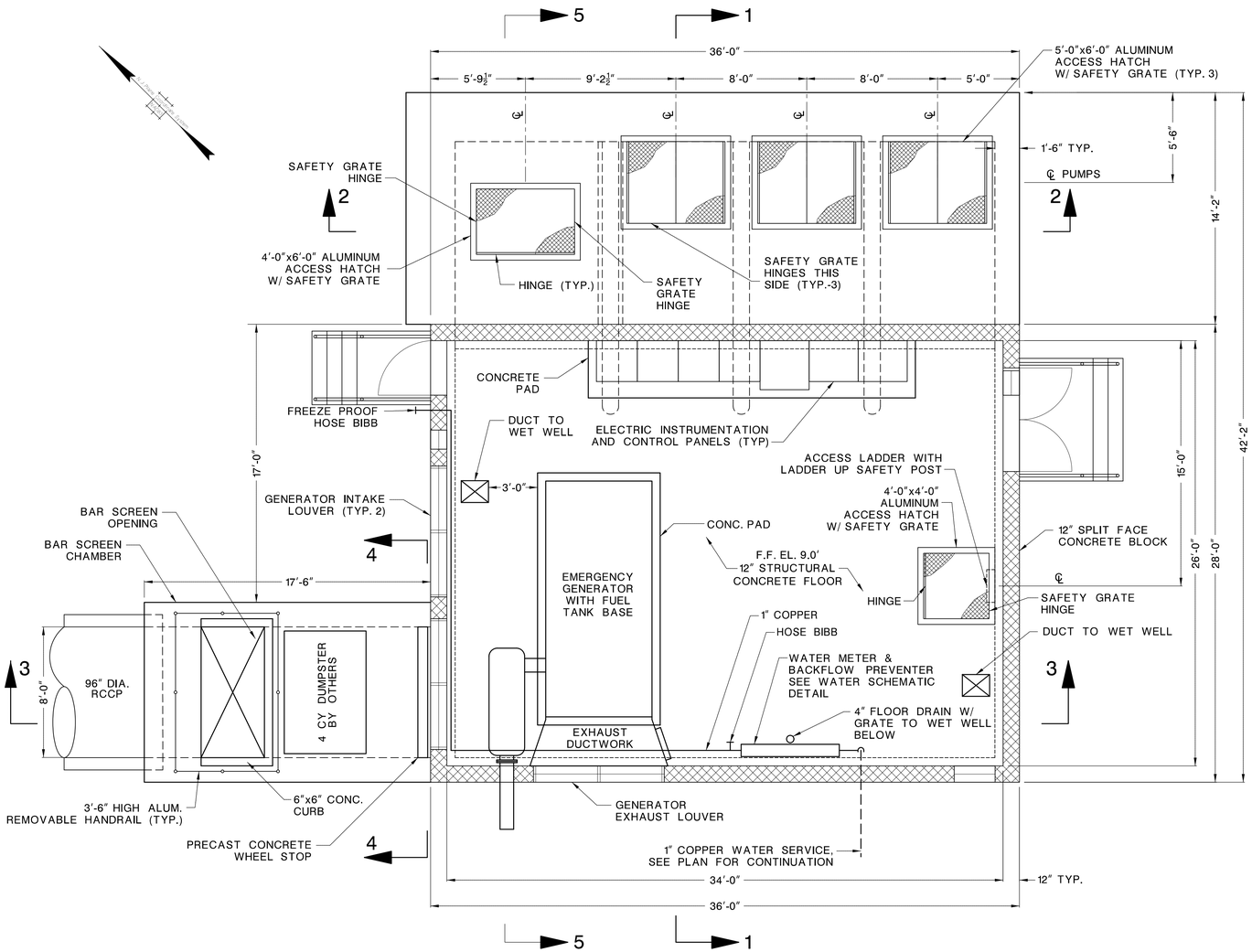

TOP PLAN AT ELEVATION 9.0

SCALE: ¼"=1'-0"

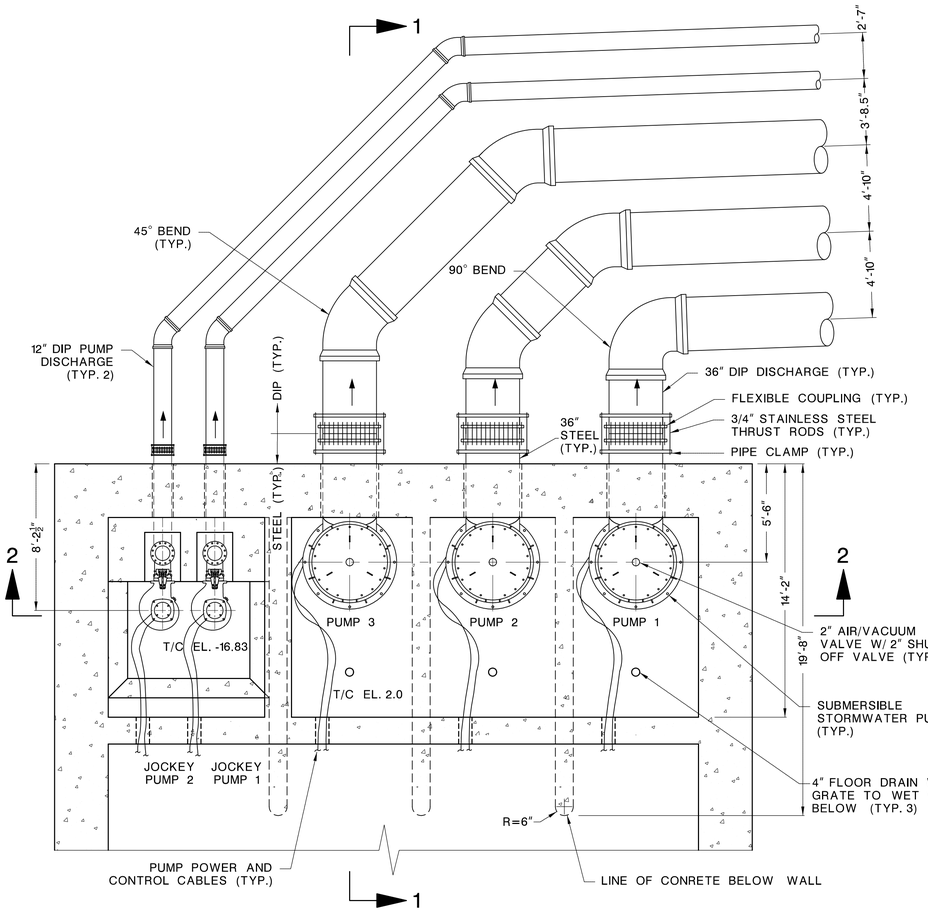

PLAN BENEATH PUMP BAY TOP SLAB

SCALE: ¼"=1'-0"

PD-1 PROCESS DESIGN - TOP PLANS

DTL-3 / DTL-44

NEW JERSEY DEPARTMENT OF TRANSPORTATION

CONSTRUCTION DETAILS

ROUTE U.S. 46 LITTLE FERRY CIRCLE

CONTRACT NO. 069950373

STORMWATER PUMP STATION	
DEWBERRY ENGINEERS INC. COA#24GA28047600	PARSONS BRINCKERHOFF, INC.
200 BROADACRES DRIVE, BLOOMFIELD NJ 07003	CERTIFICATION OF AUTHORIZATION NO. 24GA28029800
ERIC J. BOSCHEN	MICHAEL D. HELMLINGER
N.J. PROFESSIONAL ENGINEER NO. 24GE03853200	N.J. PROFESSIONAL ENGINEER NO. 24GE03812100

129

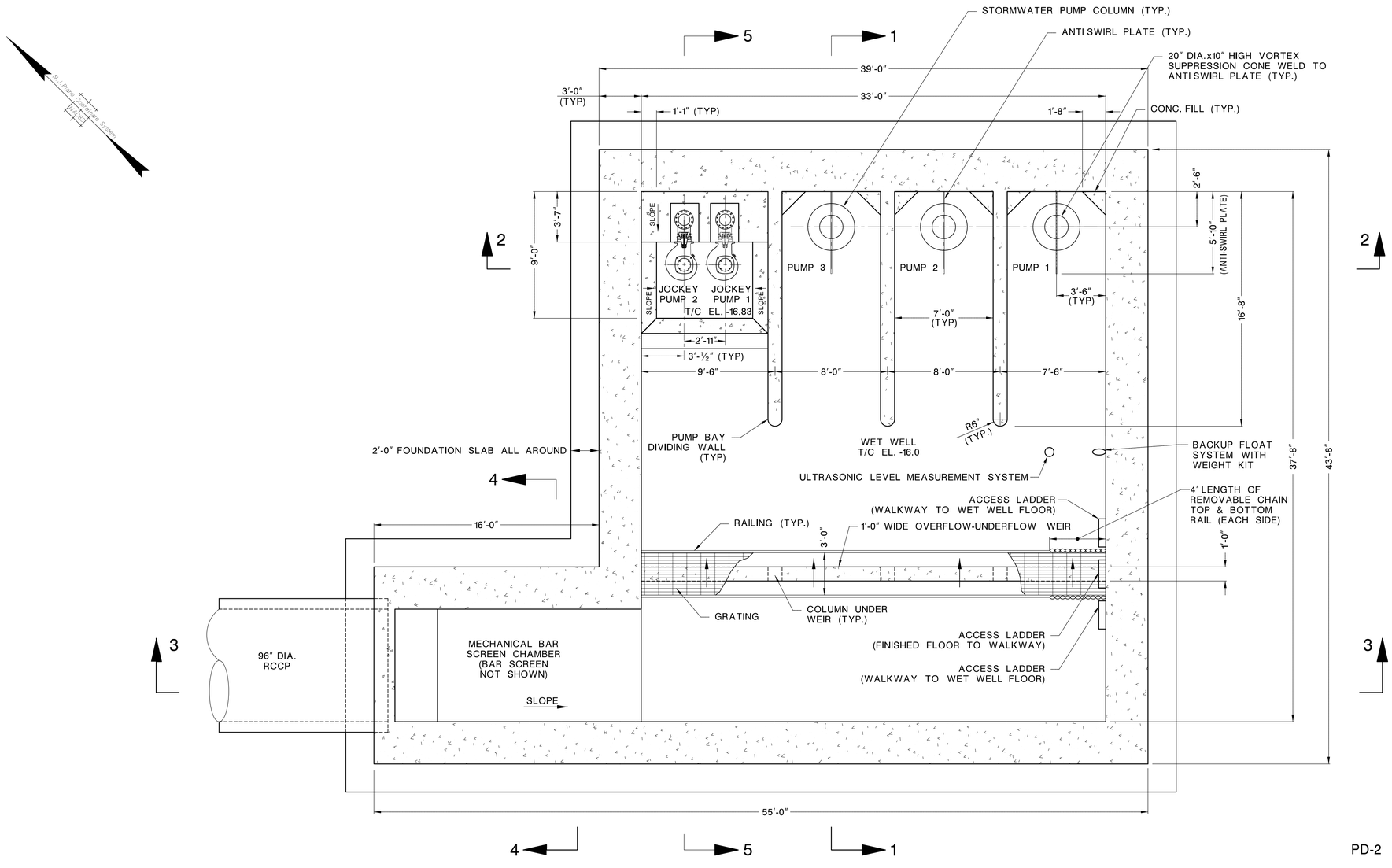

WET WELL LOWER PLAN

SCALE: ¼"=1'-0"

PD-2 PROCESS DESIGN - WET WELL LOWER PLAN

DTL-4 / DTL-44

NEW JERSEY DEPARTMENT OF TRANSPORTATION

CONSTRUCTION DETAILS

ROUTE U.S. 46 LITTLE FERRY CIRCLE

CONTRACT NO. 069950373

STORMWATER PUMP STATION	
DEWBERRY ENGINEERS INC. COA#24GA28047600	PARSONS BRINCKERHOFF, INC.
200 BROADACRES DRIVE, BLOOMFIELD NJ 07003	CERTIFICATION OF AUTHORIZATION NO. 24GA28029800
ERIC J. BOSCHEN	MICHAEL D. HELMLINGER
N.J. PROFESSIONAL ENGINEER NO. 24GE03853200	N.J. PROFESSIONAL ENGINEER NO. 24GE03812100

130

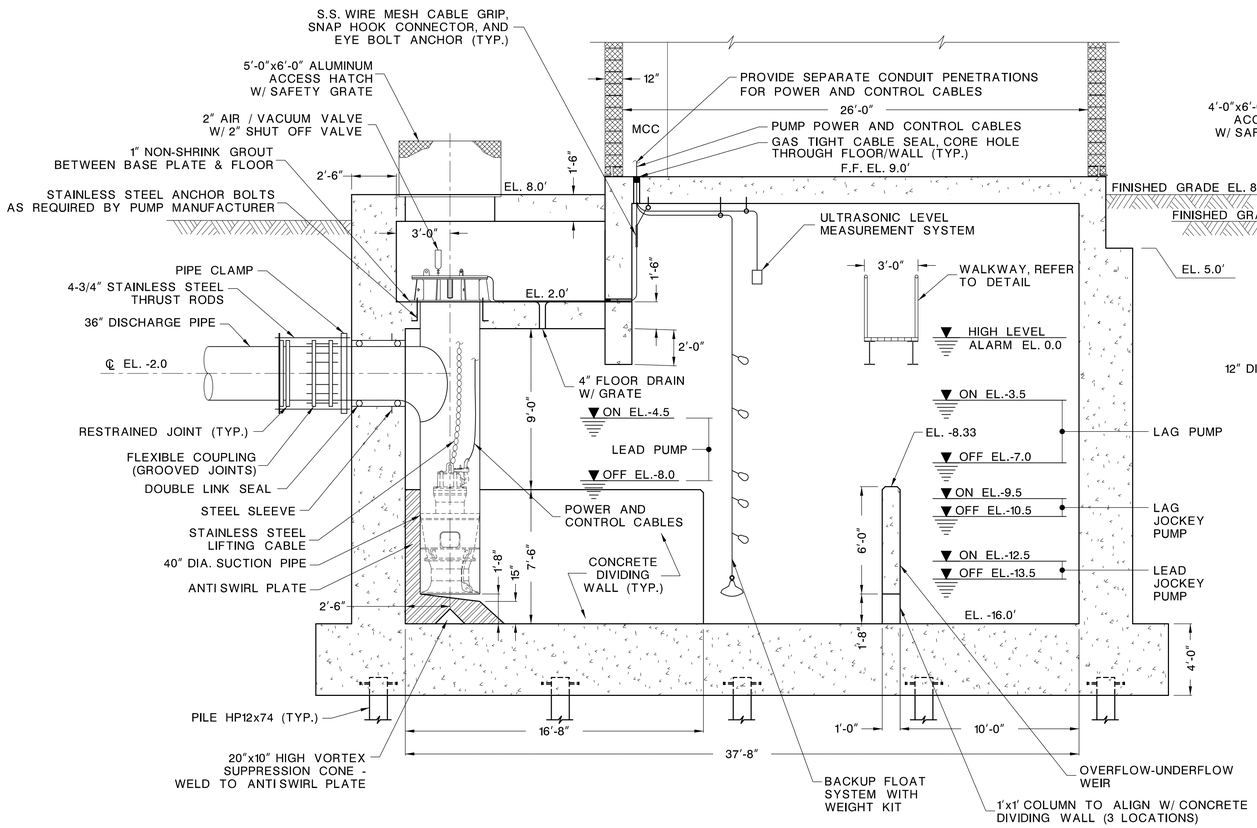

SECTION 1-1

SCALE: ¼"=1'-0"

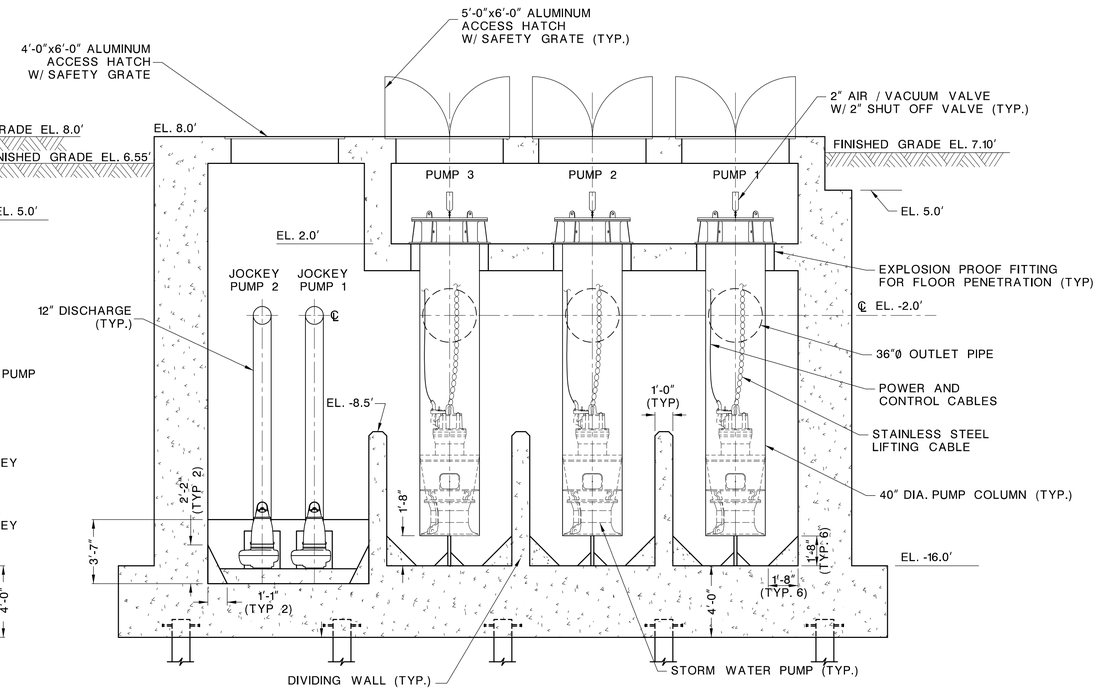

SECTION 2-2

SCALE: ¼"=1'-0"

PD-3 PROCESS DESIGN - SECTIONS - 1

DTL-5 / DTL-44

NEW JERSEY DEPARTMENT OF TRANSPORTATION

CONSTRUCTION DETAILS

ROUTE U.S. 46 LITTLE FERRY CIRCLE

CONTRACT NO. 069950373

STORMWATER PUMP STATION	
DEWBERRY ENGINEERS INC. COA#24GA28047600	PARSONS BRINCKERHOFF, INC.
200 BROADACRES DRIVE, BLOOMFIELD NJ 07003	CERTIFICATION OF AUTHORIZATION NO. 24GA28029800
ERIC J. BOSCHEN	MICHAEL D. HELMLINGER
N.J. PROFESSIONAL ENGINEER NO. 24GE03853200	N.J. PROFESSIONAL ENGINEER NO. 24GE03812100

131

NOTES:

1. SLAB OPENING REQUIRED AND ATTACHMENT DETAILS FOR MECHANICAL BAR SCREEN TO BE COORDINATED WITH MANUFACTURER.

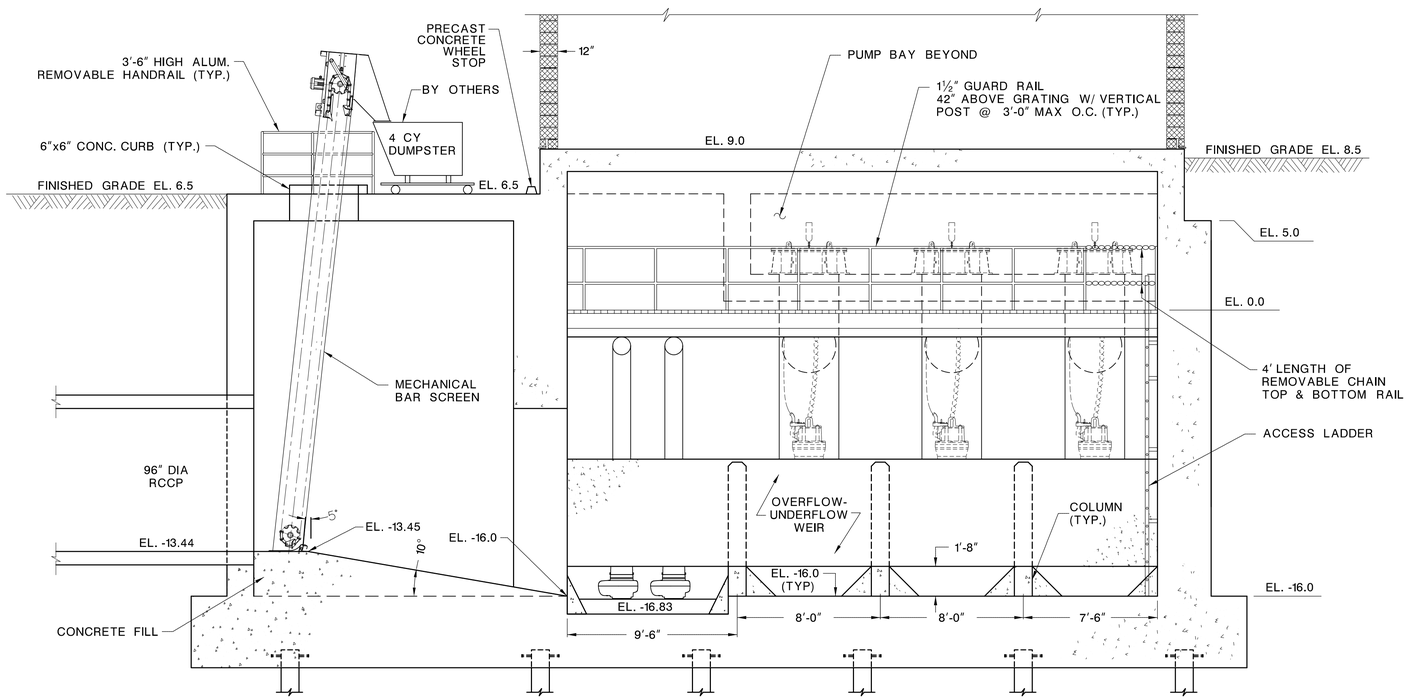

SECTION 3-3

SCALE: ¼"=1'-0"

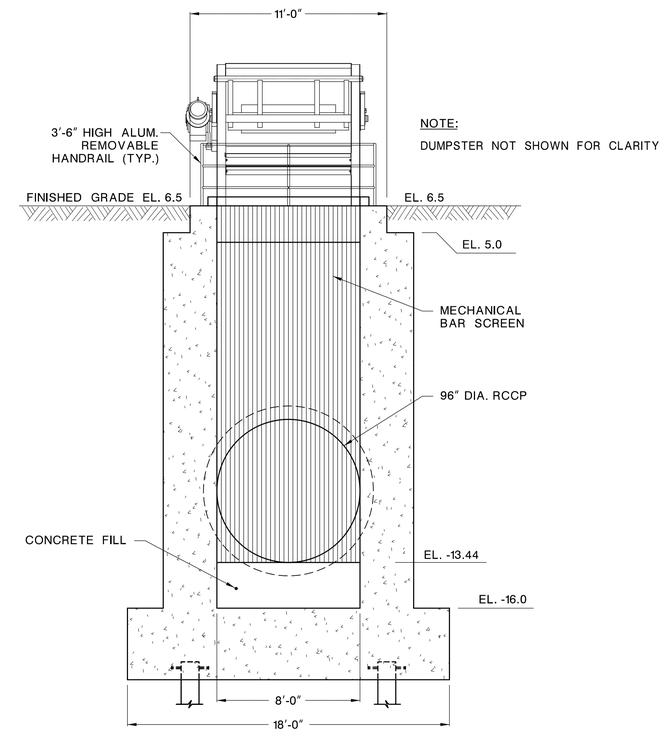

NOTE:

DUMPSTER NOT SHOWN FOR CLARITY

SECTION 4-4

SCALE: ¼"=1'-0"

PD-4 PROCESS DESIGN - SECTIONS - 2

DTL-6 / DTL-44

NEW JERSEY DEPARTMENT OF TRANSPORTATION

CONSTRUCTION DETAILS

ROUTE U.S. 46 LITTLE FERRY CIRCLE

CONTRACT NO. 069950373

STORMWATER PUMP STATION	
DEWBERRY ENGINEERS INC. COA#24GA28047600	PARSONS BRINCKERHOFF, INC.
200 BROADACRES DRIVE, BLOOMFIELD NJ 07003	CERTIFICATION OF AUTHORIZATION NO. 24GA28029800
ERIC J. BOSCHEN	MICHAEL D. HELMLINGER
N.J. PROFESSIONAL ENGINEER NO. 24GE03853200	N.J. PROFESSIONAL ENGINEER NO. 24GE03812100

132

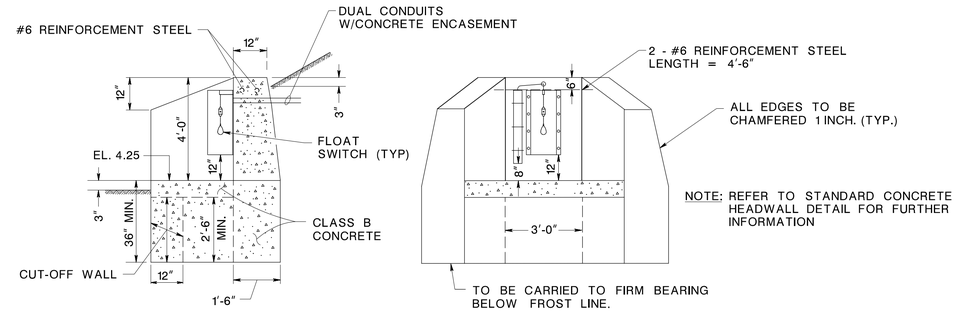

SECTION **ELEVATION**

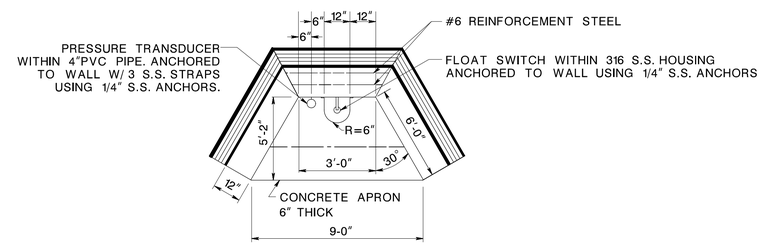

PLAN

WATER LEVEL MONITORING HEADWALL

N.T.S.

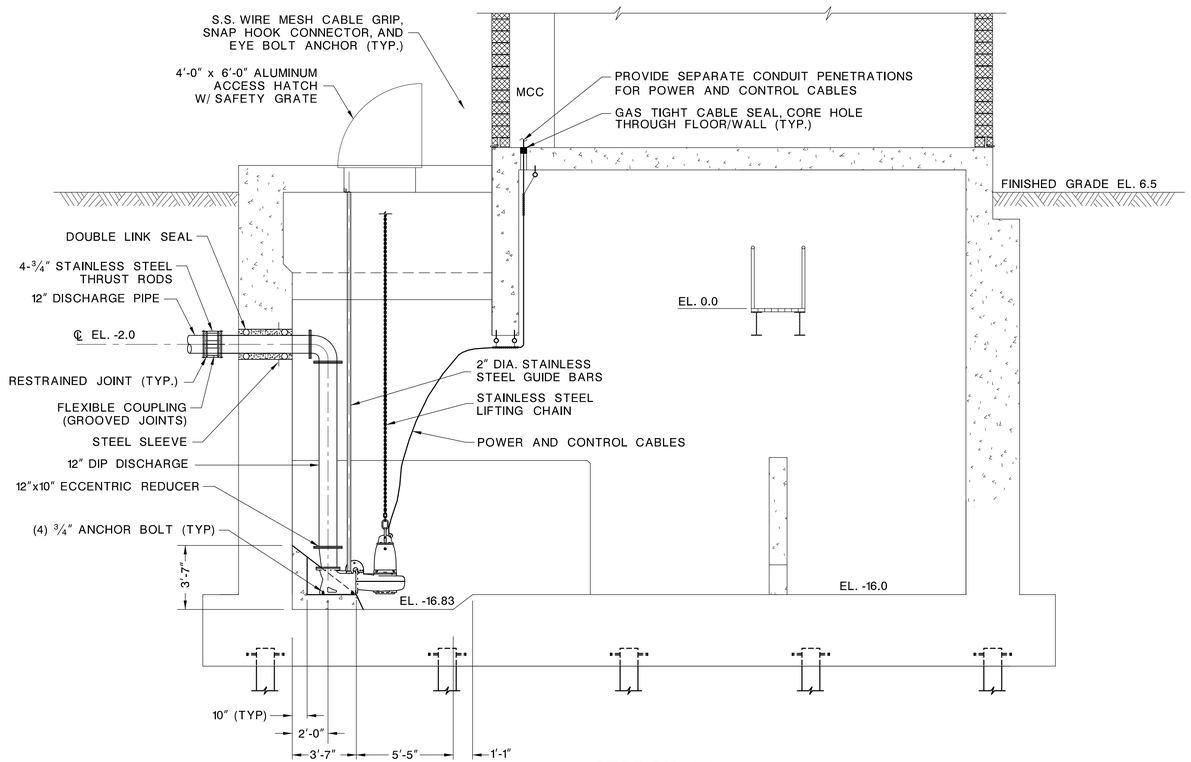

SECTION 5-5

SCALE: 1/4"=1'-0"

PD-5 PROCESS DESIGN - DETAILS

DTL-7 / DTL-44

NEW JERSEY DEPARTMENT OF TRANSPORTATION

CONSTRUCTION DETAILS

ROUTE U.S. 46 LITTLE FERRY CIRCLE

CONTRACT NO. 069950373

STORMWATER PUMP STATION	
DEWBERRY ENGINEERS INC. COA#24GA28047600	PARSONS BRINCKERHOFF, INC.
200 BROADACRES DRIVE, BLOOMFIELD NJ 07003	CERTIFICATION OF AUTHORIZATION NO. 24GA28029800
ERIC J. BOSCHEN	MICHAEL D. HELMLINGER
N.J. PROFESSIONAL ENGINEER NO. 24GE03853200	N.J. PROFESSIONAL ENGINEER NO. 24GE03812100

133

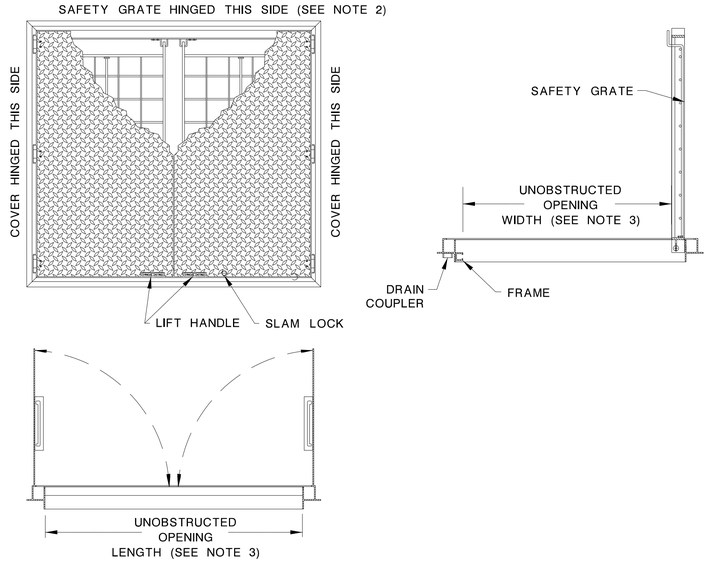

1. PROVIDE MANUFACTURER'S CALCULATIONS AND DRAWINGS SIGNED AND SEALED BY A PROFESSIONAL ENGINEER IN THE STATE OF NEW JERSEY FOR SUBMISSION TO THE NEW JERSEY DEPARTMENT OF COMMUNITY AFFAIRS.
2. SEE DRAWING PD-1 FOR LOCATION OF SAFETY GRATE HINGE.
3. SEE DRAWING PD-1 FOR UNOBSTRUCTED HATCH OPENING SIZE.

ALUMINUM ACCESS HATCH DETAIL

N.T.S.

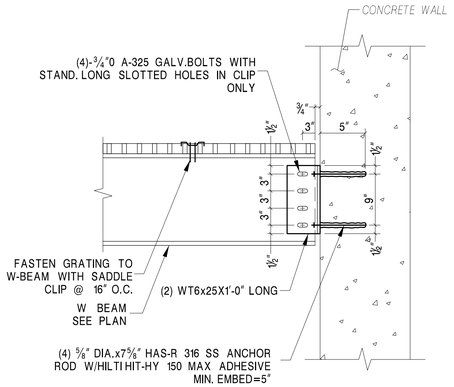

WET WELL WALKWAY BEAM TYPICAL ATTACHMENT DETAIL

N.T.S.

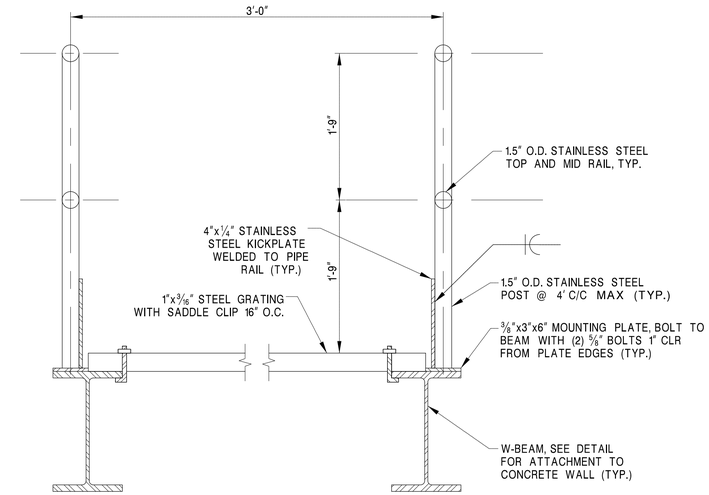

WET WELL WALKWAY DETAIL

N.T.S.

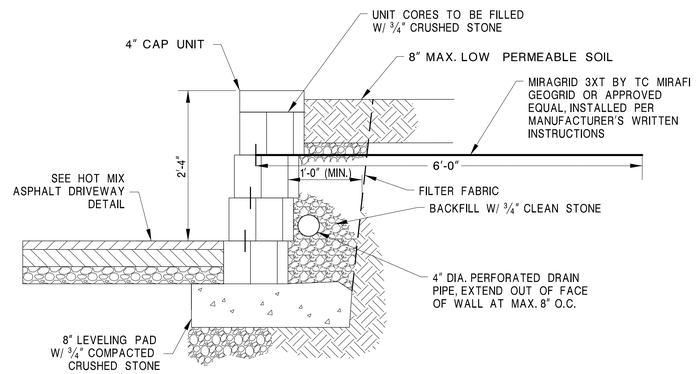

NOTES:

1. PROVIDE KEYSTONE STANDARD UNIT "CENTURY WALL" RETAINING WALL OR EQUAL.
2. INSTALL RETAINING WALL PER MANUFACTURER'S GUIDELINES AND SPECIFICATIONS.
3. ALL BACKFILL MATERIAL SHALL BE COMPACTED IN 6" LIFTS TO 95% MAX. DENSITY.
4. BACKFILL FOR FIRST 1'-0" DIRECTLY BEHIND WALL SHALL BE 3/4" CRUSHED STONE.

TYPICAL RETAINING WALL SECTION

N.T.S.

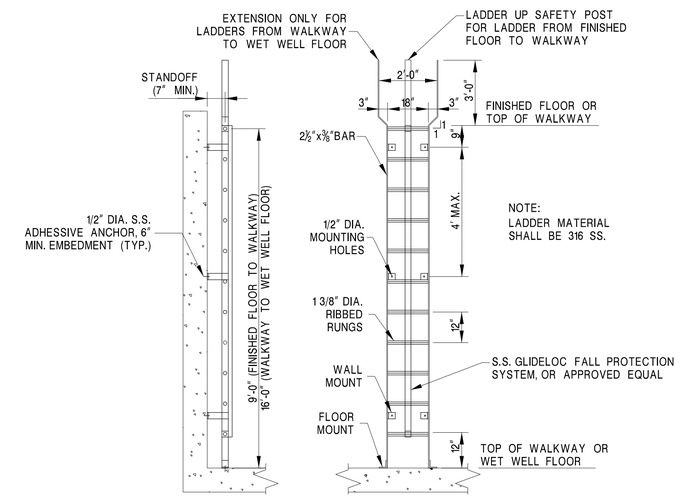

LADDER DETAIL

N.T.S.

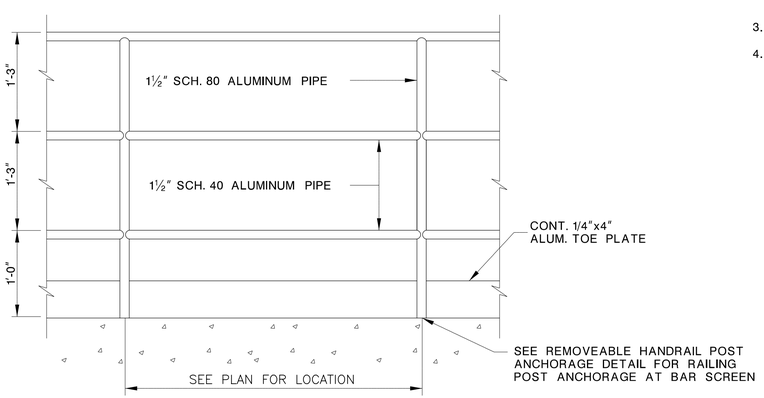

ALUMINUM HANDRAIL AT BAR SCREEN

N.T.S.

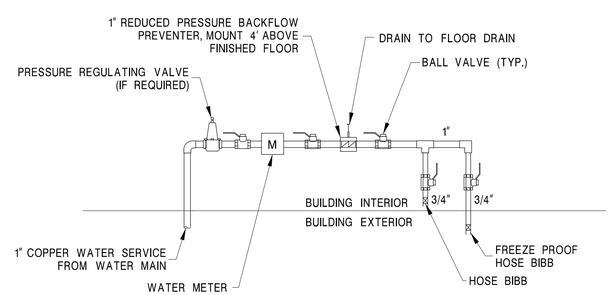

WATER SCHEMATIC

N.T.S.

PSD-1 PUMP STATION DETAILS - 1

DTL-8 / DTL-44

NEW JERSEY DEPARTMENT OF TRANSPORTATION

CONSTRUCTION DETAILS

ROUTE U.S. 46 LITTLE FERRY CIRCLE

CONTRACT NO. 069950373

STORMWATER PUMP STATION	
DEWBERRY ENGINEERS INC. COA#24GA28047600	PARSONS BRINCKERHOFF, INC.
200 BROADACRES DRIVE, BLOOMFIELD NJ 07003	CERTIFICATION OF AUTHORIZATION NO. 24GA28029800
ERIC J. BOSCHEN	MICHAEL D. HELMLINGER
N.J. PROFESSIONAL ENGINEER NO. 24GE03853200	N.J. PROFESSIONAL ENGINEER NO. 24GE03812100

134

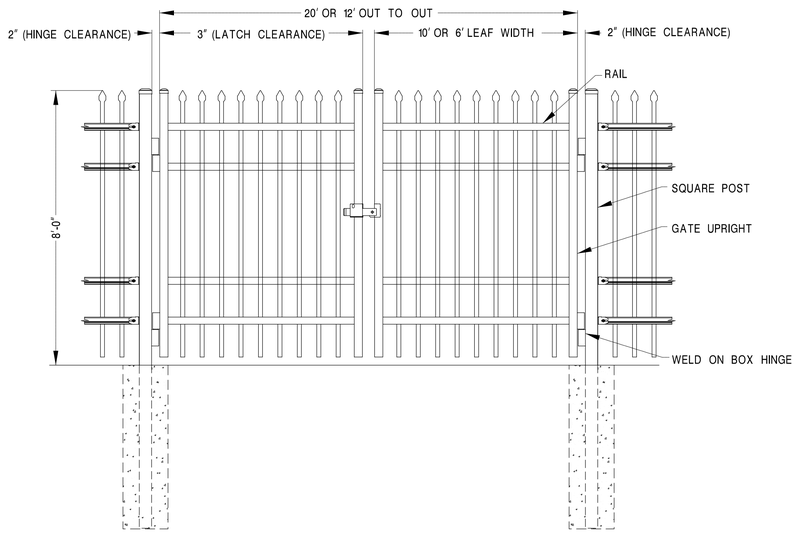

TYPICAL GATE DETAIL

N.T.S.

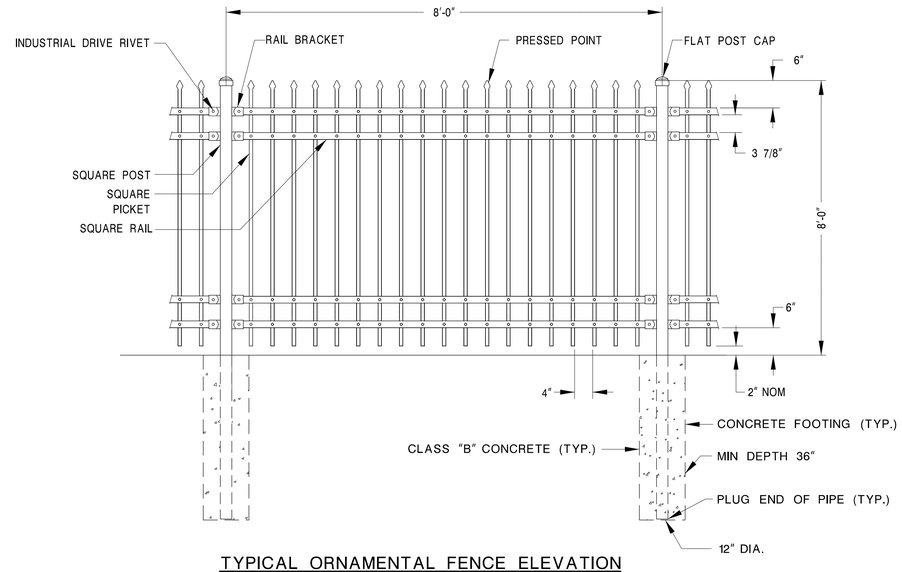

TYPICAL ORNAMENTAL FENCE ELEVATION

N.T.S.

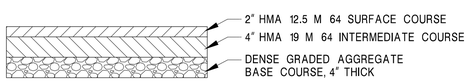

HOT MIX ASPHALT DRIVEWAY, 6" THICK

N.T.S.

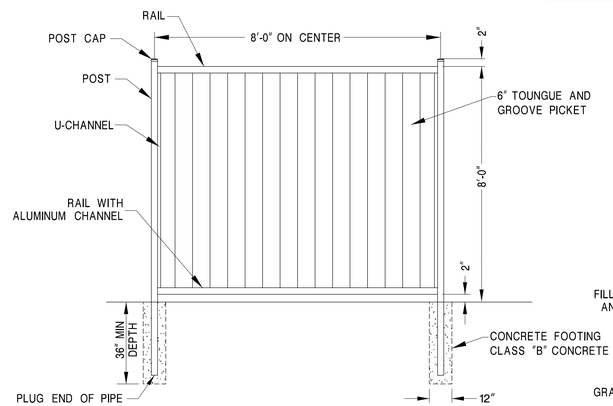

8' HIGH TONGUE & GROOVE ALUMINUM PRIVACY FENCE

N.T.S.

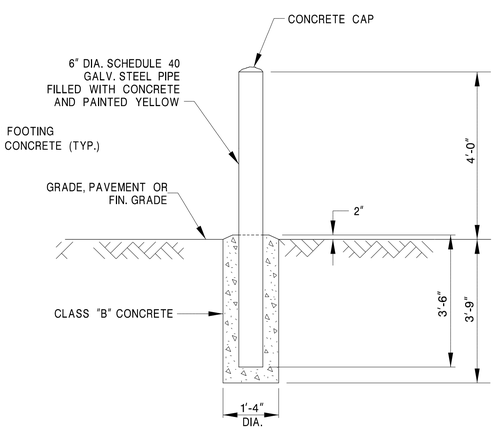

BOLLARD DETAIL

N.T.S.

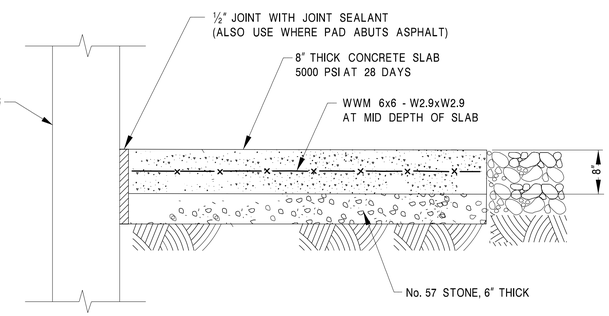

NOTE: SEE PUMP STATION PLAN FOR PAD DIMENSIONS

CONCRETE PAD DETAIL

N.T.S.

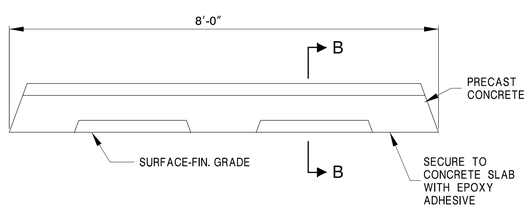

PRECAST CONCRETE WHEEL STOP

N.T.S.

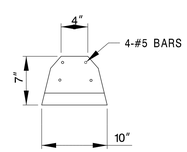

SECTION B-B

PSD-2 PUMP STATION DETAILS - 2

DTL-9 / DTL-44

NEW JERSEY DEPARTMENT OF TRANSPORTATION

CONSTRUCTION DETAILS

ROUTE U.S. 46 LITTLE FERRY CIRCLE

CONTRACT NO. 069950373

STORMWATER PUMP STATION	
DEWBERRY ENGINEERS INC. COA#24GA28047600	PARSONS BRINCKERHOFF, INC.
200 BROADACRES DRIVE, BLOOMFIELD NJ 07003	CERTIFICATION OF AUTHORIZATION NO. 24GA28029800
ERIC J. BOSCHEN	MICHAEL D. HELMLINGER
N.J. PROFESSIONAL ENGINEER NO. 24GE03853200	N.J. PROFESSIONAL ENGINEER NO. 24GE03812100

135

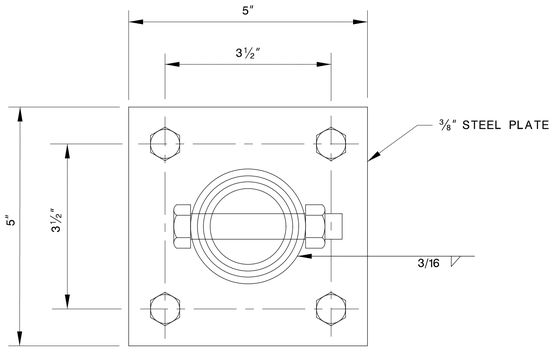

PLAN

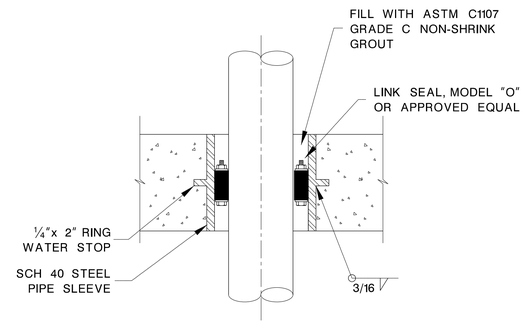

WATER/ELECTRICALSERVICE PIPE
PENETRATION THROUGH FOUNDATION WALL
N.T.S.

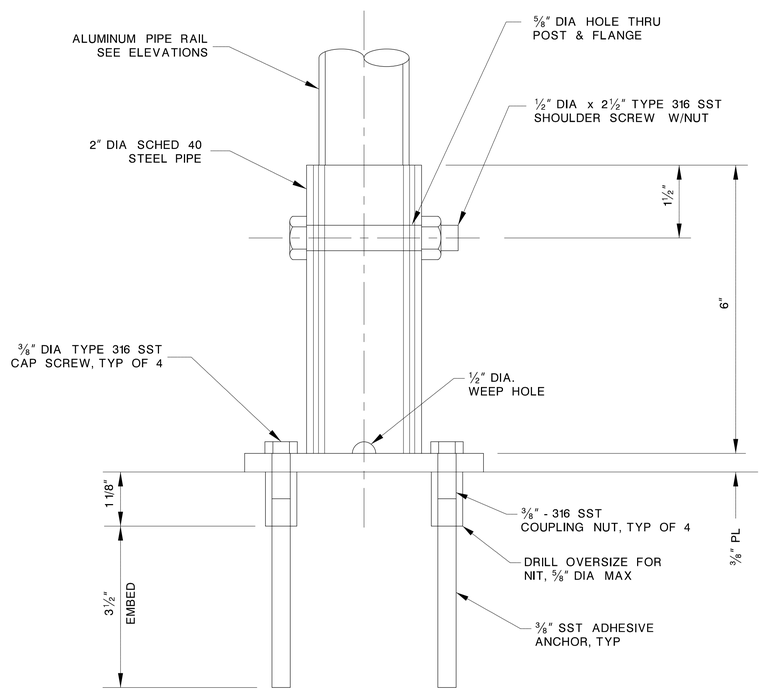

ELEVATION

REMOVABLE HANDRAIL POST ANCHORAGE
N.T.S.

PSD-3 PUMP STATION DETAILS - 3

DTL-10 / DTL-44

NEW JERSEY DEPARTMENT OF TRANSPORTATION

CONSTRUCTION DETAILS

ROUTE U.S. 46 LITTLE FERRY CIRCLE

CONTRACT NO. 069950373

STORMWATER PUMP STATION	
DEWBERRY ENGINEERS INC. COA#24GA28047600	PARSONS BRINCKERHOFF, INC.
200 BROADACRES DRIVE, BLOOMFIELD NJ 07003	CERTIFICATION OF AUTHORIZATION NO. 24GA28029800
ERIC J. BOSCHEN	MICHAEL D. HELMLINGER
N.J. PROFESSIONAL ENGINEER NO. 24GE03853200	N.J. PROFESSIONAL ENGINEER NO. 24GE03812100

136

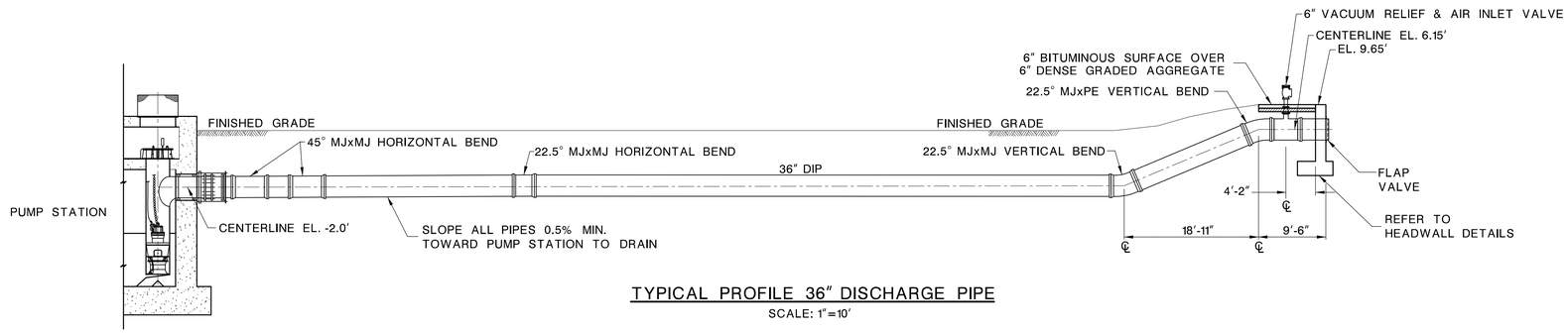

TYPICAL PROFILE 36" DISCHARGE PIPE

SCALE: 1"=10'

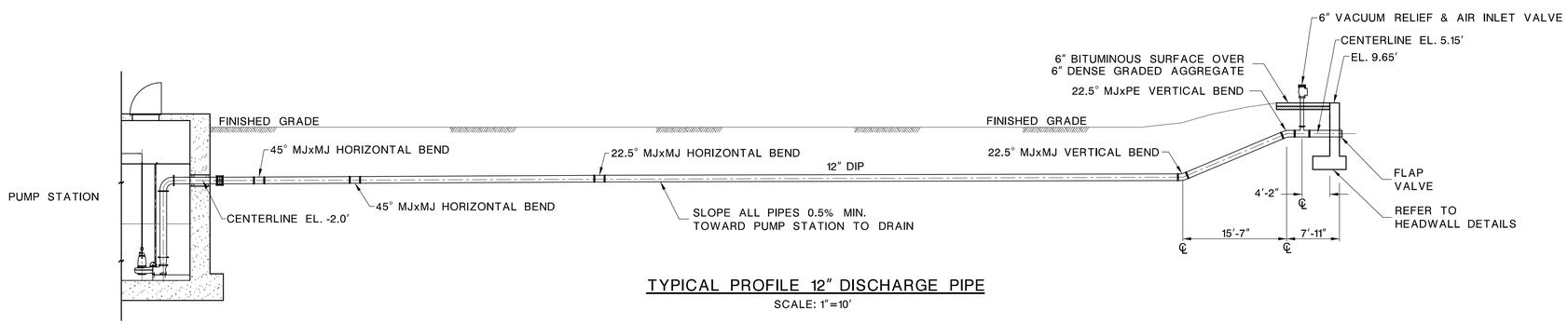

TYPICAL PROFILE 12" DISCHARGE PIPE

SCALE: 1"=10'

NOTE

1. ALL UNDERGROUND PIPE JOINTS AND FITTINGS SHALL BE RESTRAINED.

PSD-4 PUMP STATION DETAILS - 4

DTL-11 / DTL-44

NEW JERSEY DEPARTMENT OF TRANSPORTATION

CONSTRUCTION DETAILS

ROUTE U.S. 46 LITTLE FERRY CIRCLE

CONTRACT NO. 069950373

STORMWATER PUMP STATION	
DEWBERRY ENGINEERS INC. COA#24GA28047600	PARSONS BRINCKERHOFF, INC.
200 BROADACRES DRIVE, BLOOMFIELD NJ 07003	CERTIFICATION OF AUTHORIZATION NO. 24GA28029800
ERIC J. BOSCHEN	MICHAEL D. HELMLINGER
N.J. PROFESSIONAL ENGINEER NO. 24GE03853200	N.J. PROFESSIONAL ENGINEER NO. 24GE03812100

radiwinarso 3/6/2013 4:41:57 PM pdf.pltcfg $$$$$$$MODEL$$$$$$$ 30-Scale 50006425-Little-Ferry-PS Q:\50006425\CAD\Civil\FD Revised 02.12.13\PSD-4.dgn

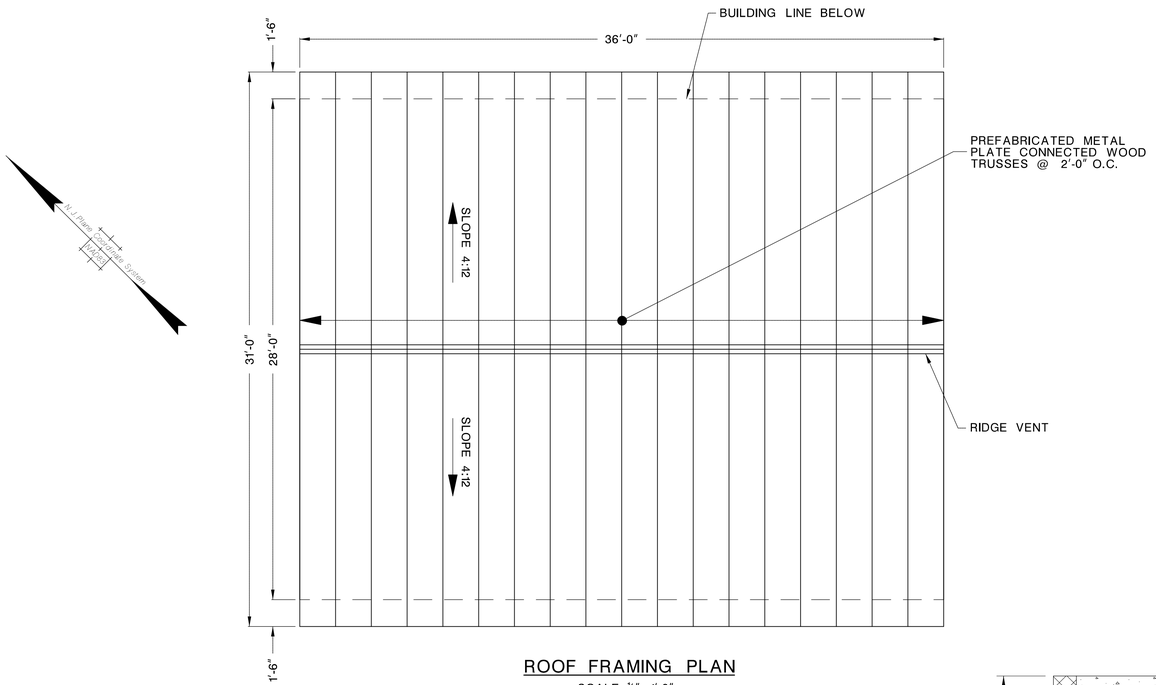

ROOF FRAMING PLAN

SCALE: ¼"=1'-0"

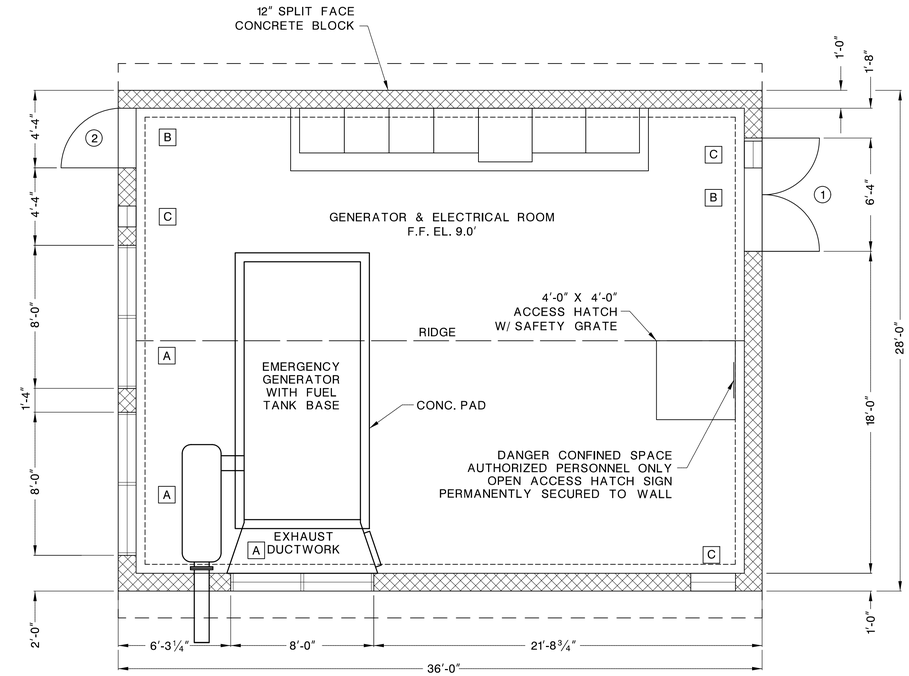

FLOOR PLAN

SCALE: ¼"=1'-0"

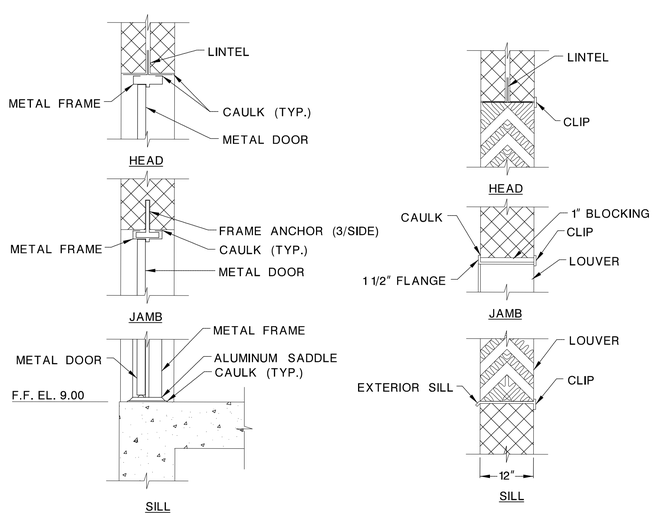

DOOR DETAILS

N.T.S.

LOUVER DETAILS

N.T.S.

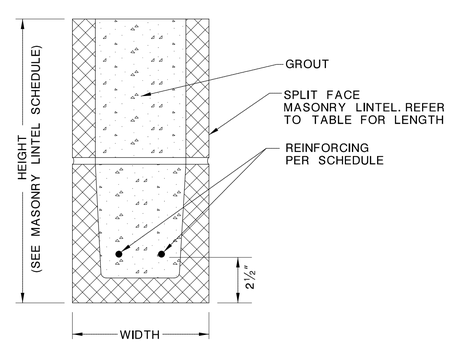

MASONRY LINTEL

N.T.S.

NOTE: SIGNS SHALL BE REFLECTIVE ALUMINUM

SIGN DETAILS

N.T.S.

DOOR SCHEDULE

NUMB.	LOCATION	SIZE	TYPE	MATERIAL	HRWD. SET	REMARKS
1	ENTRY	2-3'-0"x8'-0"x1 3/4"	FLUSH	METAL	1	
2	CONTROL ROOM	3'-0"x8'-0"x1 3/4"	FLUSH	METAL	1	

LINTEL SCHEDULE

ITEM	MAX. MASONRY OPENING	LINTEL LENGTH AND SIZE	
A	8'-0"	9'-4"	12"x24" w/ (2)#5
B	6'-4"	7'-8"	12"x16" w/ (2)#5
C	2'-6"	3'-10"	12"x16" w/ (2)#5

NOTES:
1. PROVIDE LINTELS FOR ALL MASONRY OPENING SUCH AS DUCTS, GRILLS, HVAC, MECHANICAL, PLUMBING, ELECTRICAL, AND DOORS.
2. COORDINATE ALL MASONRY OPENING WITH APPROVED SHOP DRAWINGS.
3. LINTEL LENGTH BASED ON 8" BEARING WIDTH ON EACH SIDE OF THE OPENING.

A-1 ARCHITECTURAL - GENERATOR BUILDING FLOOR PLAN, ROOF PLAN, AND DETAILS

DTL-12 / DTL-44

NEW JERSEY DEPARTMENT OF TRANSPORTATION

CONSTRUCTION DETAILS

ROUTE U.S. 46 LITTLE FERRY CIRCLE

CONTRACT NO. 069950373

STORMWATER PUMP STATION	
DEWBERRY ENGINEERS INC. COA#24GA28047600	PARSONS BRINCKERHOFF, INC.
200 BROADACRES DRIVE, BLOOMFIELD NJ 07003	CERTIFICATION OF AUTHORIZATION NO. 24GA28029800
ERIC J. BOSCHEN	MICHAEL D. HELMLINGER
N.J. PROFESSIONAL ENGINEER NO. 24GE03853200	N.J. PROFESSIONAL ENGINEER NO. 24GE03812100

138

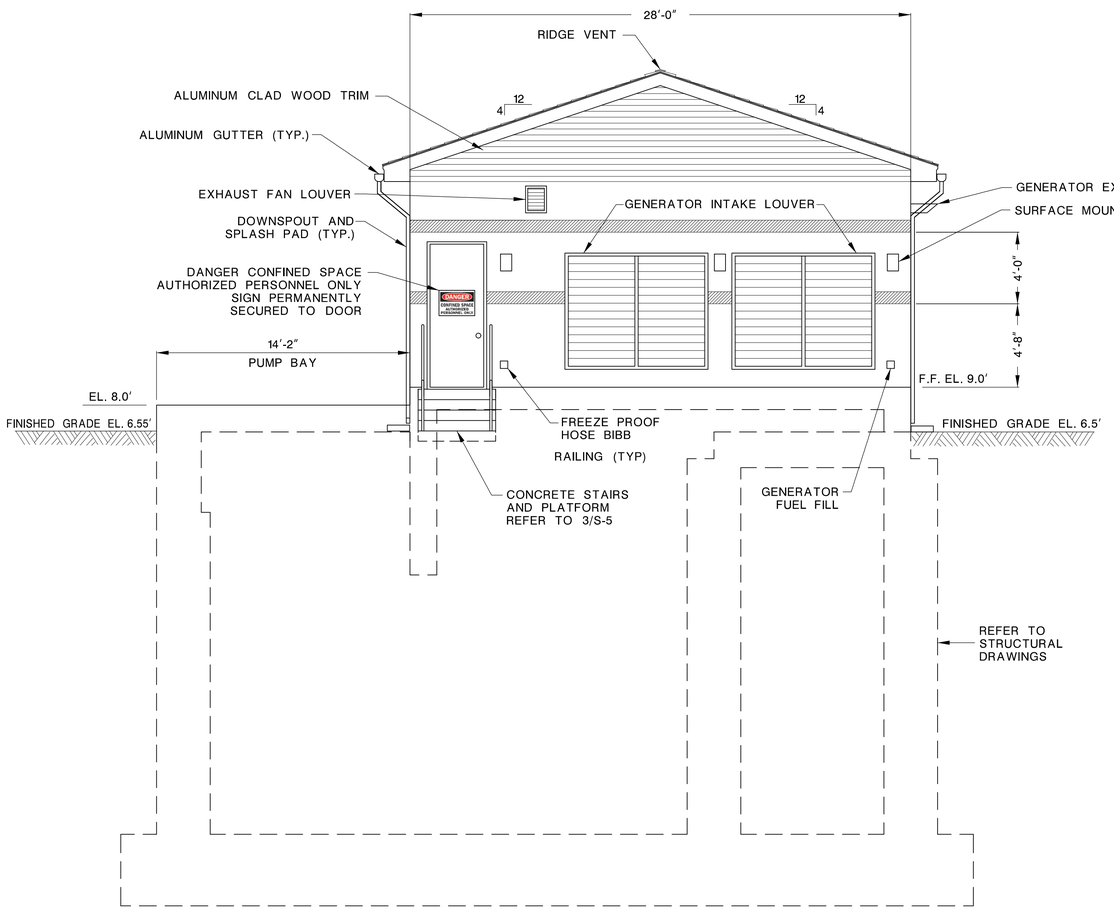

WEST ELEVATION

SCALE: ¼"=1'-0"

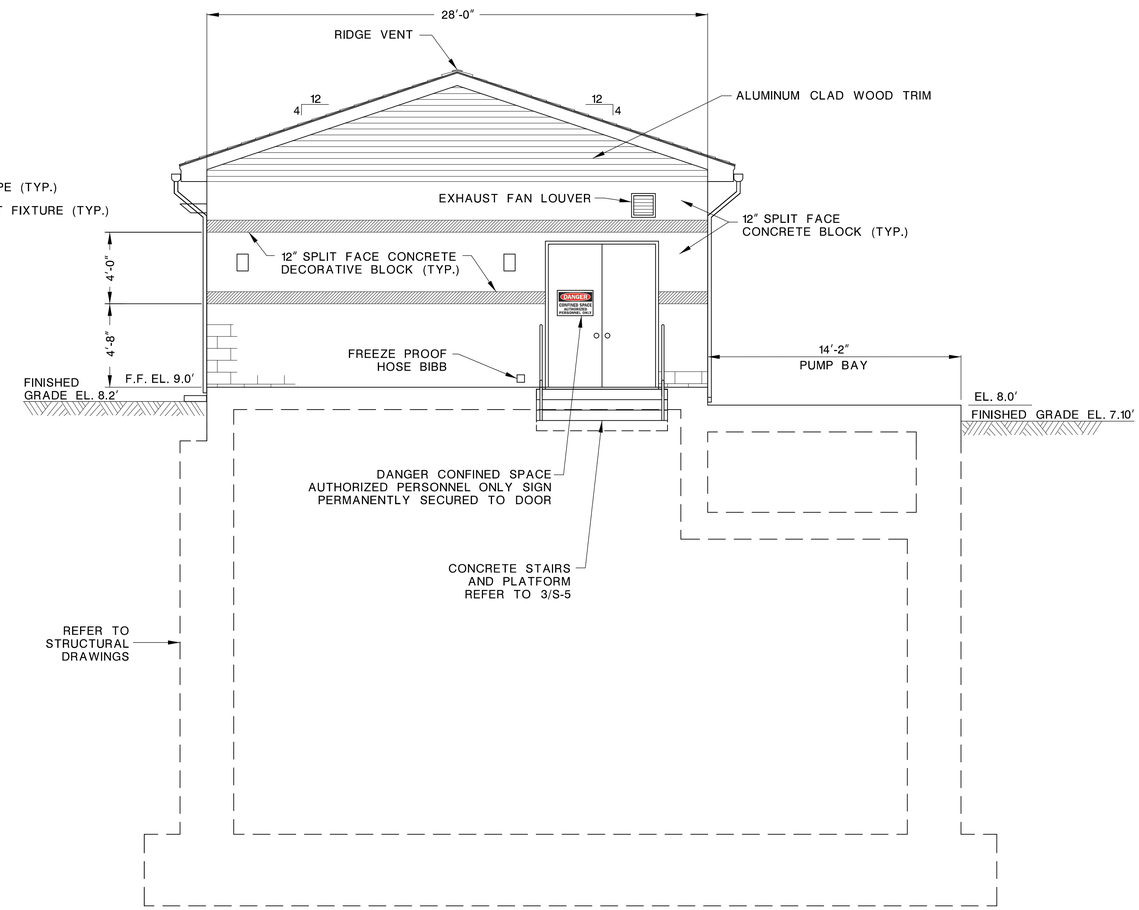

EAST ELEVATION

SCALE: ¼"=1'-0"

A-2 ARCHITECTURAL - EAST AND WEST ELEVATIONS

DTL-13 / DTL-44

NEW JERSEY DEPARTMENT OF TRANSPORTATION

CONSTRUCTION DETAILS

ROUTE U.S. 46 LITTLE FERRY CIRCLE

CONTRACT NO. 069950373

STORMWATER PUMP STATION	
DEWBERRY ENGINEERS INC. COA#24GA28047600	PARSONS BRINCKERHOFF, INC.
200 BROADACRES DRIVE, BLOOMFIELD NJ 07003	CERTIFICATION OF AUTHORIZATION NO. 24GA28029800
ERIC J. BOSCHEN	MICHAEL D. HELMLINGER
N.J. PROFESSIONAL ENGINEER NO. 24GE03853200	N.J. PROFESSIONAL ENGINEER NO. 24GE03812100

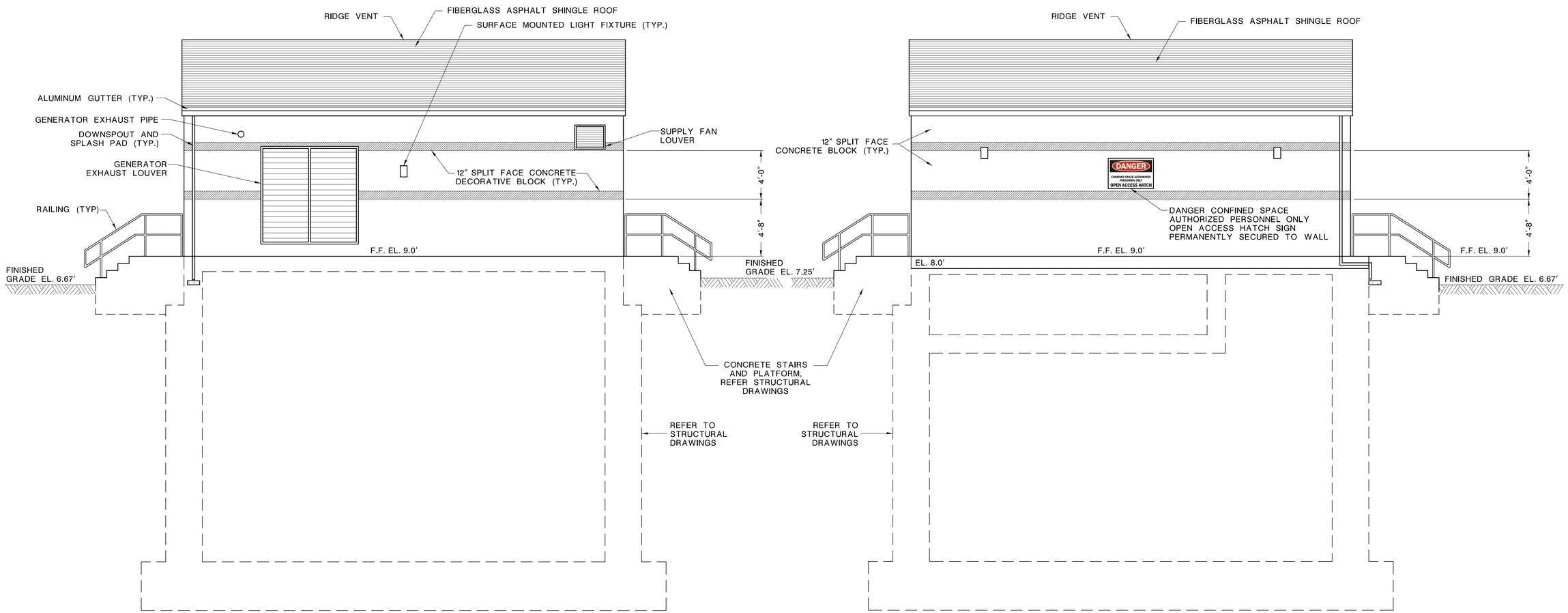

SOUTH ELEVATION

SCALE: ¼"=1'-0"

NORTH ELEVATION

SCALE: ¼"=1'-0"

A-3 ARCHITECTURAL - NORTH AND SOUTH ELEVATIONS

DTL-14 / DTL-44

NEW JERSEY DEPARTMENT OF TRANSPORTATION

CONSTRUCTION DETAILS

ROUTE U.S. 46 LITTLE FERRY CIRCLE

CONTRACT NO. 069950373

STORMWATER PUMP STATION	
DEWBERRY ENGINEERS INC. COA#24GA28047600	PARSONS BRINCKERHOFF, INC.
200 BROADACRES DRIVE, BLOOMFIELD NJ 07003	CERTIFICATION OF AUTHORIZATION NO. 24GA28029800
ERIC J. BOSCHEN	MICHAEL D. HELMLINGER
N.J. PROFESSIONAL ENGINEER NO. 24GE03853200	N.J. PROFESSIONAL ENGINEER NO. 24GE03812100

140

1. CAULKING SHALL BE EQUAL TO G.E. ULTRARUF SCS2300 WEATHER PROOFING SEALANT, COLOR TO BE SELECTED BY THE ENGINEER. INSTALL IN ACCORDANCE WITH MANUFACTURERS INSTRUCTIONS.
2. ALUMINUM CLADDING SHALL BE EQUAL TO ALCOA TRIM SHEET WITH ALUMALURE 2000 FINISH, COLOR TO BE SELECTED BY THE ENGINEER.
3. SEE BUILDING FLOOR PLAN, ARCHITECTURAL AND MECHANICAL DRAWINGS FOR LOCATION OF WALL OPENINGS.
4. SEE STRUCTURAL DRAWINGS FOR FOUNDATION AND FLOOR REINFORCING.
5. ROOF SHEATHING SHALL BE 5/8" THICK EXTERIOR GRADE PLYWOOD.
6. ROOF FELT SHALL BE 15# FELT.
7. ROOF SHINGLES SHALL BE TIMBERLINE ULTRA OR EQUAL.
8. ROOF TRUSS DESIGN SHALL MEET ALL APPLICABLE BUILDING CODES. SHOP DRAWINGS AND CALCULATIONS SHALL BE SUBMITTED IN ACCORDANCE WITH PROJECT CONTRACT DOCUMENTS, SIGNED AND SEALED BY A LICENSED PROFESSIONAL ENGINEER IN THE STATE OF NEW JERSEY.
9. SEE SHEET S-1 FOR PLATE CONNECTED WOOD TRUSS LOAD CRITERIA.

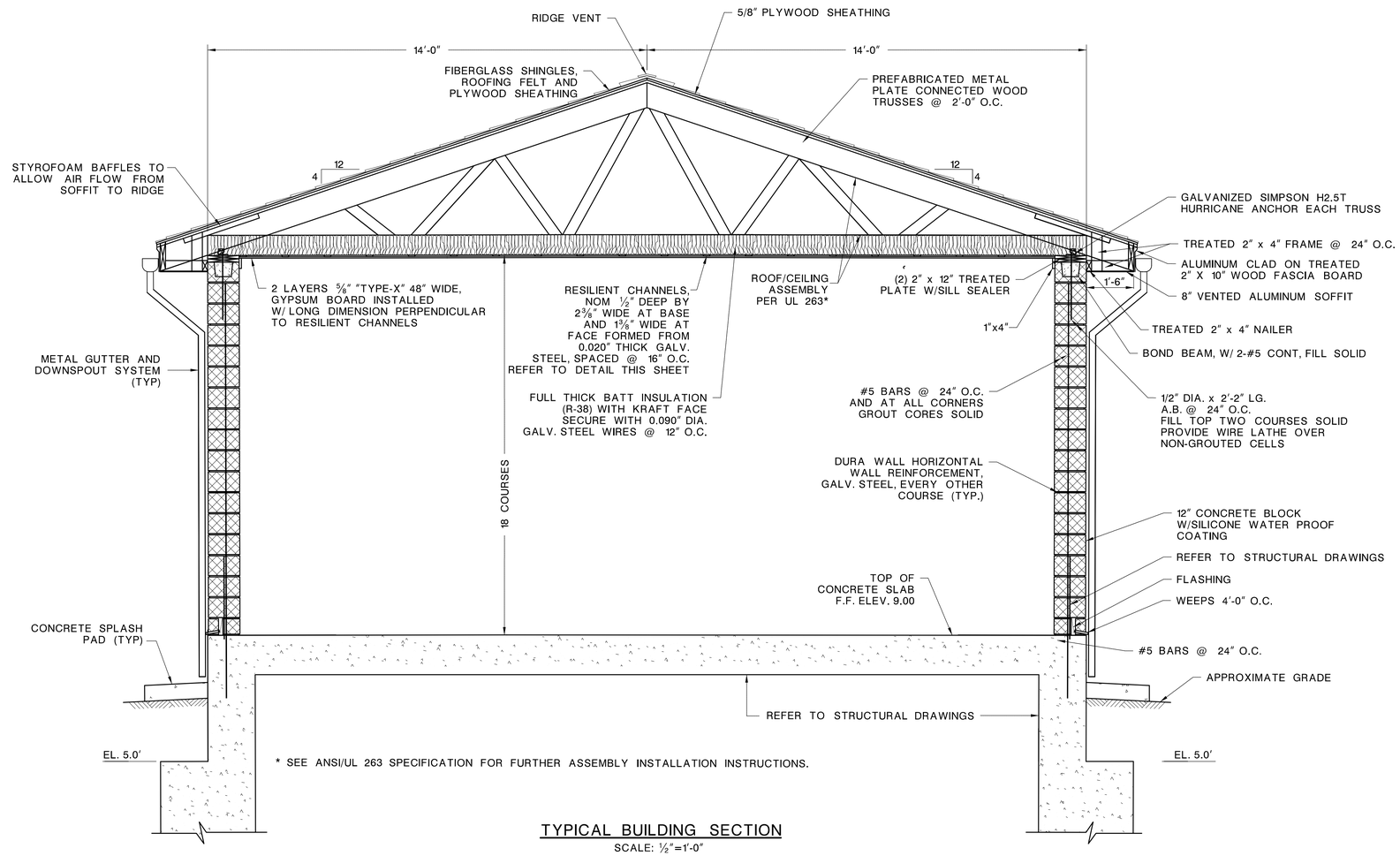

TYPICAL BUILDING SECTION

SCALE: 1/2"=1'-0"

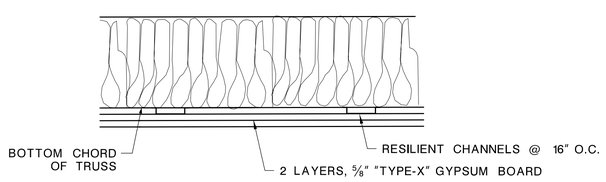

RESILIENT CHANNEL DETAIL

SCALE: NONE

A-4 ARCHITECTURAL - TYPICAL BUILDING SECTION DETAIL

DTL-15 / DTL-44

NEW JERSEY DEPARTMENT OF TRANSPORTATION

CONSTRUCTION DETAILS

ROUTE U.S. 46 LITTLE FERRY CIRCLE

CONTRACT NO. 069950373

STORMWATER PUMP STATION	
DEWBERRY ENGINEERS INC. COA#24GA28047600	PARSONS BRINCKERHOFF, INC.
200 BROADACRES DRIVE, BLOOMFIELD NJ 07003	CERTIFICATION OF AUTHORIZATION NO. 24GA28029800
ERIC J. BOSCHEN	MICHAEL D. HELMLINGER
N.J. PROFESSIONAL ENGINEER NO. 24GE03853200	N.J. PROFESSIONAL ENGINEER NO. 24GE03812100

141

GENERAL NOTES:

1. ALL WORK SHALL BE PERFORMED IN ACCORDANCE WITH THE LATEST EDITION NATIONAL ELECTRICAL CODE, AND ALL GOVERNING LOCAL CODES, LAWS AND REGULATIONS AND THE REQUIREMENTS OF THE "HIGH VOLTAGE PROXIMITY ACT".
2. THE CONTRACTOR SHALL VISIT THE SITE AND BECOME FAMILIAR WITH ALL EXISTING CONDITIONS THAT MAY AFFECT HIS WORK AND SHALL NOT BE ENTITLED TO ANY ADDITIONAL COMPENSATION FOR HIS FAILURE TO DO SO.
3. PERFORM ALL WORK IN A WORKMAN LIKE MANNER AND PROVIDE A COMPLETE OPERATIONAL SYSTEM.
4. MINIMUM SIZE OF RACEWAY FOR POWER AND LIGHTING CIRCUITS SHALL BE 3/4" RGS CONDUIT, UON. PROVIDE FLEXIBLE SEALTITE CONDUITS FOR FINAL CONNECTIONS TO MOTORS.
5. MINIMUM WIRE SIZE FOR POWER AND LIGHTING CIRCUITS SHALL BE #12 AWG, TYPE THWN/THHN, UON.
6. UNLESS OTHERWISE NOTED, PULL AND JUNCTION BOXES WHERE INDICATED ON DRAWINGS, SHALL BE CONSIDERED SHOWN AT THEIR APPROXIMATE LOCATION. THE CONTRACTOR SHALL LOCATE THEM AS FIELD CONDITIONS DICTATE. ADDITIONAL PULL AND JUNCTION BOXES NOT SHOWN ON DRAWINGS SHALL BE PROVIDED WHERE REQUIRED BY APPLICABLE CODE PROVISIONS OR FIELD CONDITIONS, AND SHALL BE INCLUDED IN THE CONTRACTORS LUMP SUM BID, WITH NO ADDITIONAL COST TO THE STATE.
7. EXPOSED NON-CURRENT CARRYING METAL PARTS OF ELECTRICAL EQUIPMENT & RACEWAYS SHALL BE GROUNDED. THE CONTRACTOR SHALL ENSURE CONTINUITY OF THE GROUNDING CIRCUIT THROUGH THIS GROUNDING CONDUCTOR FROM THE SUPPLYING PANELBOARD GROUNDING BUS TO THE LOAD GROUND TERMINAL. THE ELECTRICAL SYSTEM SHALL BE GROUNDED IN ACCORDANCE WITH ARTICLE 250 OF THE NATIONAL ELECTRICAL CODE.
8. ARCHITECTURAL FEATURES AS WELL AS MECHANICAL EQUIPMENT SHOWN ON ELECTRICAL DRAWINGS ARE FOR BACKGROUND INFORMATION ONLY. REFER TO ARCHITECTURAL AND STRUCTURAL DRAWINGS FOR ACTUAL BUILDING CONSTRUCTION AND TO MECHANICAL DRAWINGS FOR ACCURATE MECHANICAL EQUIPMENT LOCATIONS.
9. ALL WORK SHOWN ON THE DRAWINGS IS NEW, AND SHALL BE CONSIDERED WORK TO BE PERFORMED UNDER THIS CONTRACT.
10. ALL CONDUIT RUNS IN THIS CONTRACT ARE DIAGRAMMATIC. LOCATION OF EQUIPMENT AND RUNS MAY VARY DUE TO PHYSICAL CONDITIONS. THE WORK SHALL INCLUDE ALL REQUIRED OUTLET & JUNCTION BOXES TO COMPLETE THE CONDUIT INSTALLATION. CONTRACTOR SHALL INSTALL EQUIPMENT AND CONDUITS IN A MANNER TO MINIMIZE ANY INTERFERENCE WITH OTHER CONTRACTS OR TRADES.
11. COORDINATE ALL WORK IN THE FIELD WITH OTHER TRADES.
12. PERFORM ALL CHASING AND PATCHING OF FLOOR/WALLS/ COLUMNS ETC., AS REQUIRED FOR INSTALLATION AND WIRING OF EQUIPMENT.
13. INSTALL ALL CONDUIT AND WIRING, JUNCTION AND PULL BOXES SURFACE MOUNTED ON WALL OR CEILING. SWITCHES SHALL BE SURFACE MOUNTED ON WALL.
14. ALL EQUIPMENT, DEVICES, AND INSTALLATION WITHIN THE WET WELL AND BAR SCREEN CHAMBER SHALL CONFORM TO CLASS 1, DIVISION 1, GROUP D, HAZARDOUS LOCATION REQUIREMENTS.
15. ALL NEW ELECTRICAL GEAR SHALL BE PROVIDED WITH 90° RATED TERMINALS.

SEISMIC REQUIREMENTS NOTES:

1. PROVIDE SEISMIC BRACING AND ANCHORING OF ALL EQUIPMENT AND SYSTEMS PROVIDED AS PART OF THIS CONTRACT IN ACCORDANCE WITH THE 2011 NEC AND IBC 2009 CODES NJ EDITION. THE DESIGN AND APPLICATION OF SEISMIC RESTRAINTS OF ELECTRICAL EQUIPMENT, COMPONENTS AND SYSTEMS SHALL MEET THE CODE CRITERIA LISTED. THE CONTRACTOR SHALL ENGAGE AN INDEPENDENT PROFESSIONAL ENGINEER CURRENTLY LICENSED IN THE STATE OF NEW JERSEY TO DESIGN AND PREPARE SUBMITTALS, SUPERVISE INSTALLATION AND CERTIFY THAT THE INSTALLATION MEETS THE SEISMIC CRITERIA LISTED HEREIN. SIGNED AND SEALED INSTALLATION DETAILS SHALL BE SUBMITTED.
2. THE DESIGN AND APPLICATION OF SEISMIC RESTRAINTS OF ELECTRICAL COMPONENTS AND SYSTEMS IN BUILDINGS SHALL BE IN ACCORDANCE WITH THE CRITERIA LISTED IN THE 2011 NEC AND IBC 2009 CODES NJ EDITION.

LIGHTING FIXTURE SCHEDULE

SYMBOL	MANUFACTURER	CATALOG NO.	VOLTS	LAMP NO.	LAMP TYPE	MOUNTING	MT. HT.	REMARKS
F1	COOPER LIGHTING METALUX	VT2-2-32-DR-120-EB81/ WL-VT2-Chain/Set-U	120 V	2	T8 32W	SURFACE	CEILING	INDOOR 1'X4' INDUSTRIAL HIGH OUTPUT VAPORITE; 2 LAMPS, FLUORESCENT LIGHT FIXTURE
F2	RAB LIGHTING	WPTF28MS	120 V	1	CFL 28W	WALL MOUNTED	9' ABOVE GRADE	OUTDOOR, COMPACT FLUORESCENT LIGHT FIXTURE WITH BUILT IN MINI SENSOR FOR MOTION DETECTION
F3 EX	LDPI, H.I.D. XP2 SERIES	XP-2-S-M-70-P-120-G-B2-T-UNIPAK/E-WITH VMB2, 3/4" WALL BOX	120 V	1	70W HPS	WALL MOUNTED	12" BELOW CEILING	EXPLOSION PROOF, CLASS 1, DIV. 1, HAZARDOUS & MARINE LOCATIONS. PROVIDE VMB2, 3/4" WALL MOUNT OUTLET BOX
	LIGHTALARMS U8XL COMBO SERIES	U8XL-N-W-R-W/2L-LH6	120 V	2	QUARTZ	WALL MOUNTED	ABOVE DOOR	HEAVY DUTY METAL LED EXIT SIGN AND TWO HEAD EMERGENCY LIGHT WITH NICKEL-CADMIUM BATTERY WITH 90 MINUTE CAPACITY AND AUTOMATIC RECHARGER, AND UNIVERSAL MOUNTING. BATTERY SHALL HAVE CAPACITY TO OPERATE TWO HEAD EXTERIOR EMERGENCY LIGHTS
	COOPER LTG.	6T12DWMHBK	6 V	2	HALOGEN	WALL MOUNTED	ABOVE DOOR	HEAVY DUTY TWO HEAD EXTERIOR EMERGENCY LIGHT POWERED FROM BATTERY UNIT ON INSIDE OF DOOR
	LITHONIA OR COOPER LTG.	ELT16-N-H-MT-VM XR-15-MH-V	120 V	2	HALOGEN	WALL MOUNTED	8' AFF	DIE-FORMED STEEL EMERGENCY LIGHTING UNIT WITH 90 MINUTE MINIMUM ILLUMINATION, 2 GLASS SEALED-BEAM LAMPS IN METAL HOUSING, AND CORROSION RESISTANT INSTRUMENT TAN ENAMEL
EX	EMERGI-LITE HZM SERIES	12HZM56-2-UE-H1	120 V	2	12W	WALL MOUNTED	12" BELOW CEILING	EMERGI-LITE, HZM SERIES FOR HAZARDOUS LOCATION, 12 VOLT EMERGENCY LIGHTING UNIT WITH TWO LAMPS, 90 MINUTES BATTERY BACKUP AND 120 VOLT HEATER

LEGEND:

$	SINGLE POLE SWITCH EX-INDICATES EXPLOSION PROOF MOUNTED AT 42" AFF
$3	3-WAY SWITCH MOUNTED AT 42" AFF
$T	THERMAL SWITCH -MANUAL
F1	INDICATES FIXTURE TYPE AS INDICATED IN LIGHTING SCHEDULE
	FLUORESCENT FIXTURE
	WALL MOUNTED LIGHTING FIXTURE
EX	EXPLOSION PROOF LIGHTING FIXTURE
	EMERGENCY LIGHTING UNIT
	EXIT SIGN AND TWO HEAD EMERGENCY LIGHT
	GENERATOR
	DUPLEX RECEPTACLE MOUNTED AT 18" AFF
	PANEL HOMERUN (2#12 AWG UON)
	SAFETY DISCONNECT SWITCH
	COMBINATION STARTER AND DISCONNECT SWITCH WITH MOTOR CIRCUIT PROTECTOR
	TRANSFORMER
	MOTOR
	UTILITY POLE
	JUNCTION BOX
	NORMALLY CLOSED CONTACT
	NORMALLY OPEN CONTACT
T	THERMOSTAT - (PROVIDED BY MC, INSTALLED BY EC)
MLD	MOTORIZED LOUVER DAMPER - (INSTALLED BY MC, WIRED BY EC)
DC	SECURITY DOOR CONTACT
K	SECURITY KEYPAD
G	GROUND WIRE
	GROUND ROD
V	VOLTMETER, 0-600V RANGE
A	AMMETER, 0-800A RANGE
M	UTILITY METER
VS	VOLTMETER SWITCH
AS	AMMETER SWITCH
	COMBINATION DISCONNECT SWITCH AND STARTER
ESS	ELECTRONIC SOFT STARTER
OL	MOTOR OVERLOAD PROTECTOR
	CIRCUIT BREAKER
GFP	GROUND FAULT PROTECTOR

NOTE: SEE DRAWING E-5 FOR FIRE ALARM LEGENDS.

ABBREVIATIONS:

AF	CIRCUIT BREAKER AMPERE FRAME SIZE
AFF	ABOVE FINISHED FLOOR
AIC	INTERRUPTING CAPACITY
AT	CIRCUIT BREAKER AMPERE TRIP RATING
AWG	AMERICAN WIRE GAUGE
C	CONDUIT
CB	CIRCUIT BREAKER
CLG	CEILING
DACT	DIGITAL ALARM COMMUNICATOR TRANSMITTER
EC	ELECTRICAL CONTRACTOR
EF	EXHAUST FAN
FACP	FIRE ALARM CONTROL PANEL
G, GND	GROUND
GFI, GFCI	GROUND FAULT CIRCUIT INTERRUPTER
HP	HORSEPOWER
LP	LIGHTING & POWER PANEL
MC	MECHANICAL CONTRACTOR
MCB	MAIN CIRCUIT BREAKER
MCC	MAIN CIRCUIT BREAKER
MIN	MINIMUM
MLO	MAIN LUGS ONLY
N	NEUTRAL (GROUNDED CIRCUIT CONDUCTOR)
NEC	NATIONAL ELECTRIC CODE
0	PHASE
P	POLE(S)
PP	POWER PANEL
RGS	GALVANIZED STEEL CONDUIT
SF	SUPPLY FAN
SPD	SURGE PROTECTIVE DEVICE
TVSS	TRANSIENT VOLTAGE SURGE SUPPRESSION
TYP	TYPICAL
UON	UNLESS OTHERWISE NOTED
V	VOLTS
VA	VOLT-AMPERE
VAC	VOLTS ALTERNATING CURRENT
W	WATT

E-1 ELECTRICAL - NOTES, LEGENDS AND ABBREVIATIONS

DTL-16 / DTL-44

NEW JERSEY DEPARTMENT OF TRANSPORTATION

CONSTRUCTION DETAILS

ROUTE U.S. 46 LITTLE FERRY CIRCLE

CONTRACT NO. 069950373

STORMWATER PUMP STATION

DEWBERRY ENGINEERS INC. COA#24GA28047600
200 BROADACRES DRIVE, BLOOMFIELD NJ 07003

SHAHIDUL H. JOARDER
N.J. PROFESSIONAL ENGINEER NO. 24GE04861900

PARSONS BRINCKERHOFF, INC.
CERTIFICATION OF AUTHORIZATION NO. 24GA28029800

MICHAEL D. HELMLINGER
N.J. PROFESSIONAL ENGINEER NO. 24GE03812100

142

ELECTRICAL 3ø PANEL SCHEDULE

DESIGNATION: LP
RATING: 120/208V, 3ø, 4W
BUS RATING: 100 AMPS

LOCATION: GENERATOR ROOM
☐ *MAIN LUGS ONLY*
☒ *MAIN CIRCUIT BREAKER:* 100 AMPS

AIC: 22,000 AMP

SERVICE	KVA øA	KVA øB	KVA øC	BKR. AMP.	CKT. No.	CKT. No.	BKR. AMP.	KVA øA	KVA øB	KVA øC	SERVICE
GENERATOR BATTERY CHARGER	0.50			20	1	2	20	0.80			INTERIOR LIGHTING
EF-2		0.70		20	3	4	20		0.30		EXTERIOR LIGHTING
RECEPTACLES			0.80	20	5	6	20			0.90	LOWER LEVEL LIGHTING
EF-1	0.29			20	7	8	20	0.10			GAS DETECTION PANEL
		0.29			9	10	20		0.20		MLD
			0.29	3	11	12	20				SPARE
SF-1	0.29			20	13	14	30	1.5			GENERATOR BLOCK HEATER
		0.29			15	16	2		1.5		
			0.29	3	17	18	20			--	SPARE
FACP/DACT	0.6			20	19	20	20	--			
SECURITY SYSTEM		0.6		20	21	22	20		--		
SPACE			--	--	23	24	20			--	
	--			--	25	26	20	--			
		--		--	27	28	20		--		
			--	--	29	30	20			--	

LOAD– *øA:* 4.08 KVA
øB: 3.88 KVA
øC: 2.28 KVA

TOTAL: 10.24 KVA

MOUNTING: SURFACE *POLES:* 30
MIN. SHORT CIRCUIT RATING: 22,000 *AIC*

ELECTRICAL 3ø PANEL SCHEDULE

DESIGNATION: PP
RATING: 277/480V, 3ø, 4W
BUS RATING: 100 AMPS

LOCATION: GENERATOR ROOM
☒ *MAIN LUGS ONLY*
☐ *MAIN CIRCUIT BREAKER:*

AIC: 35,000 AMP

SERVICE	KVA øA	KVA øB	KVA øC	BKR. AMP.	CKT. No.	CKT. No.	BKR. AMP.	KVA øA	KVA øB	KVA øC	SERVICE
UH-1	3.33			20	1	2	20	--			SPARE
		3.33			3	4			--		
			3.33	3	5	6				--	
UH-2	3.33			20	7	8		--			
		3.33			9	10			--		
			3.33	3	11	12				--	
SPARE	--			20	13	14		--			
		--			15	16			--		
			--		17	18				--	
	--				19	20	--	--			SPACE
		--			21	22	--		--		
SPACE			--	--	23	24	--			--	
	--			--	25	26	--	--			
		--		--	27	28	--		--		
			--	--	29	30	--			--	

LOAD– *øA:* 6.66 KVA
øB: 6.66 KVA
øC: 6.66 KVA

TOTAL: 19.98 KVA

MOUNTING: SURFACE *POLES:* 30
MIN. SHORT CIRCUIT RATING: 35,000 *AIC*

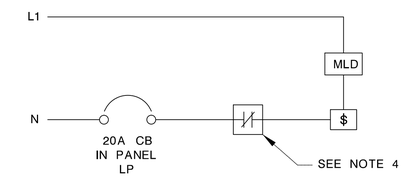

MOTORIZED LOUVER DAMPER
WIRING DIAGRAM
N.T.S.

ELECTRICAL NOTES:

1. REFER TO DRAWING E-1 FOR NOTES, LEGENDS AND ABBREVIATIONS.
2. ALL CIRCUIT BREAKERS IN MCC SHALL BE RATED FOR 65,000 AIC.
3. OUT OF THREE MAIN PUMPS, ONLY TWO WILL RUN SIMULTANEOUSLY.
4. PROVIDE A NORMALLY CLOSED 20 AMP DRY CONTACT FOR MOTORIZED LOUVER DAMPER CONTROL IN ATS. THE DRY CONTACT SHALL BE NORMALLY CLOSED DURING NORMAL POWER OPERATION AND OPEN DURING EMERGENCY GENERATOR POWER OPERATION.
5. PROVIDE PERMANENT MEANS FOR LOCKING OUT THE PUMP CONTROLLERS AT OPEN POSITION AND MEANS FOR TAGGING, DURING PUMP MAINTENANCE, SO THAT THE PUMPS CANNOT BE TURNED "ON" ACCIDENTALLY OR UNEXPECTEDLY, WITHOUT AUTHORIZATION FROM MAINTENANCE PERSONNEL.

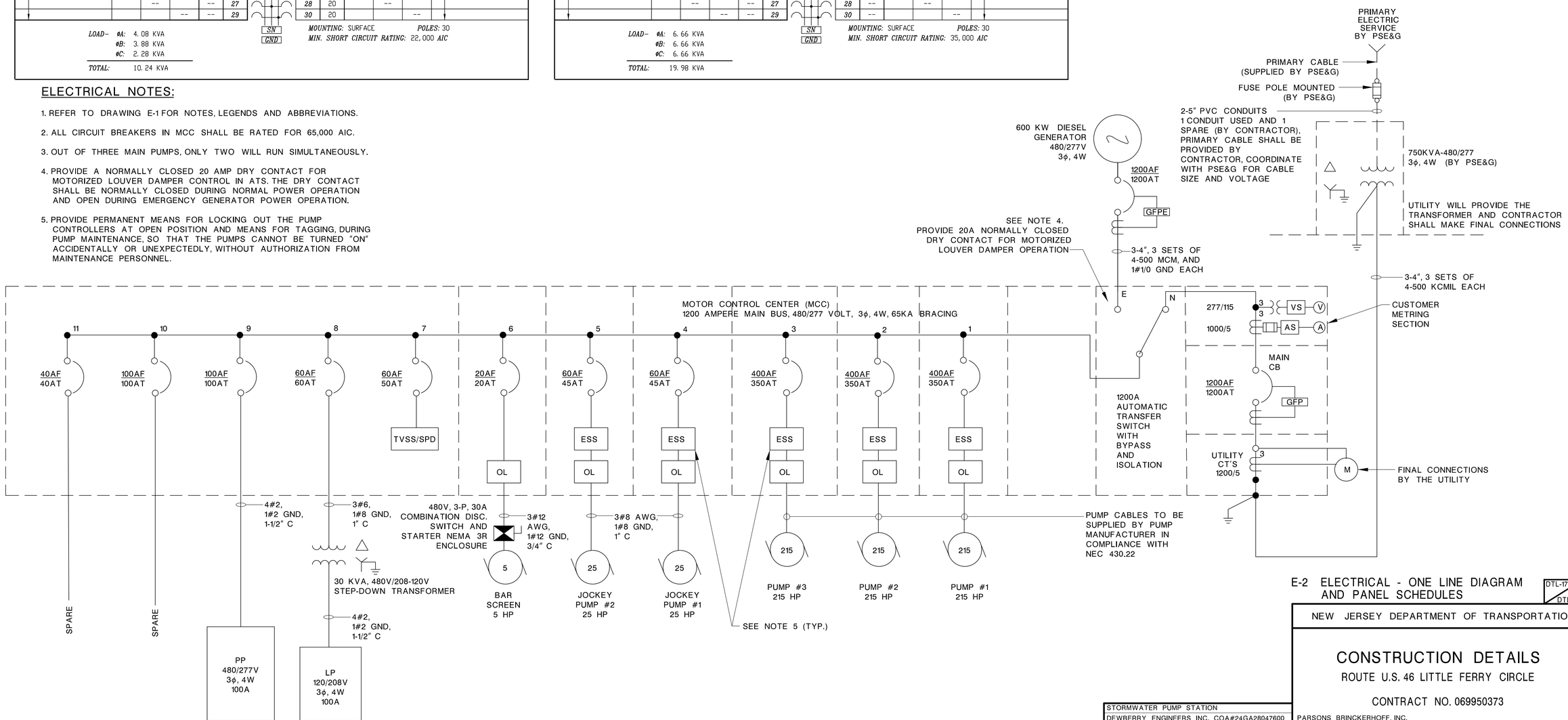

E-2 ELECTRICAL - ONE LINE DIAGRAM AND PANEL SCHEDULES

DTL-17 / DTL-44

NEW JERSEY DEPARTMENT OF TRANSPORTATION

CONSTRUCTION DETAILS

ROUTE U.S. 46 LITTLE FERRY CIRCLE

CONTRACT NO. 069950373

STORMWATER PUMP STATION	
DEWBERRY ENGINEERS INC. COA#24GA28047600	PARSONS BRINCKERHOFF, INC.
200 BROADACRES DRIVE, BLOOMFIELD NJ 07003	CERTIFICATION OF AUTHORIZATION NO. 24GA28029800
SHAHIDUL H. JOARDER	MICHAEL D. HELMLINGER
N.J. PROFESSIONAL ENGINEER NO. 24GE04861900	N.J. PROFESSIONAL ENGINEER NO. 24GE03812100

radiwinarso 3/6/2013 4:42:12 PM pdf.pltcfg $$$$$$$MODEL$$$$$$$ 30-Scale 50006425-Little-Ferry-PS Q:\50006425\CAD\Civil\FD Revised 02.12.13\E-2.dgn

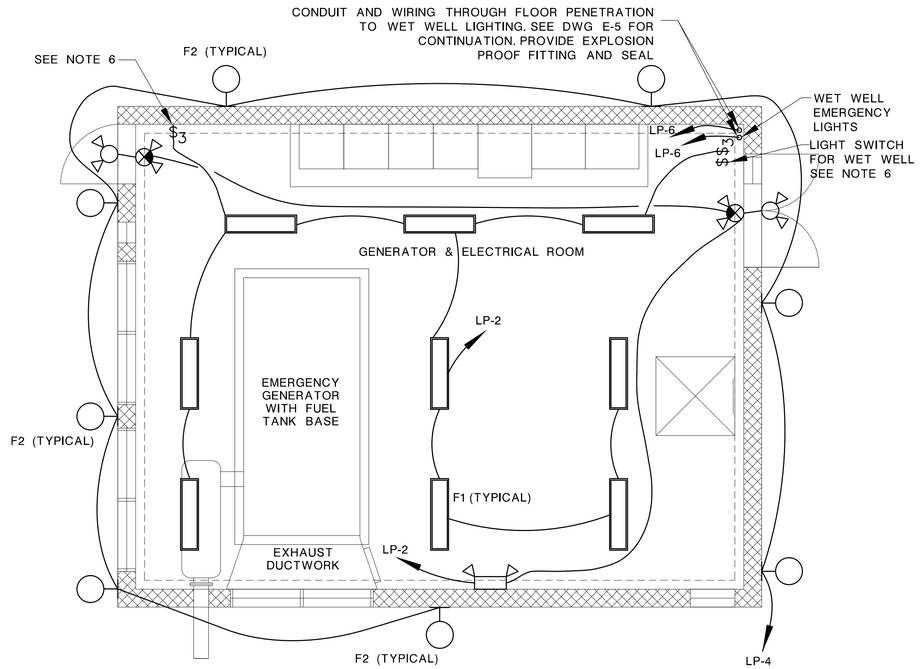

ELECTRIC LIGHTING PLAN

SCALE: ¼"=1'-0"

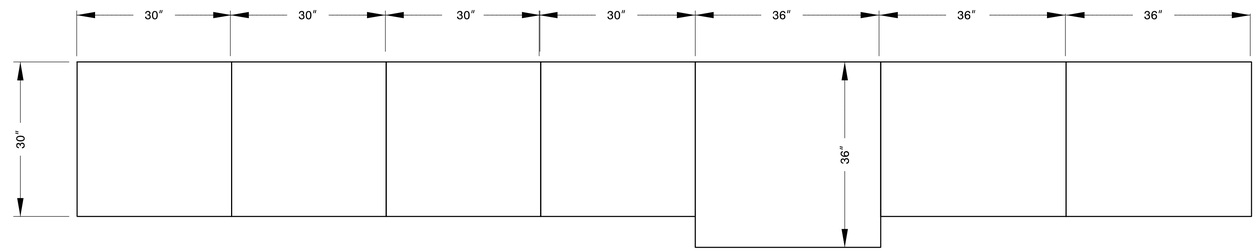

ELECTRIC SWITCHBOARD AND MCC PLAN

N.T.S.

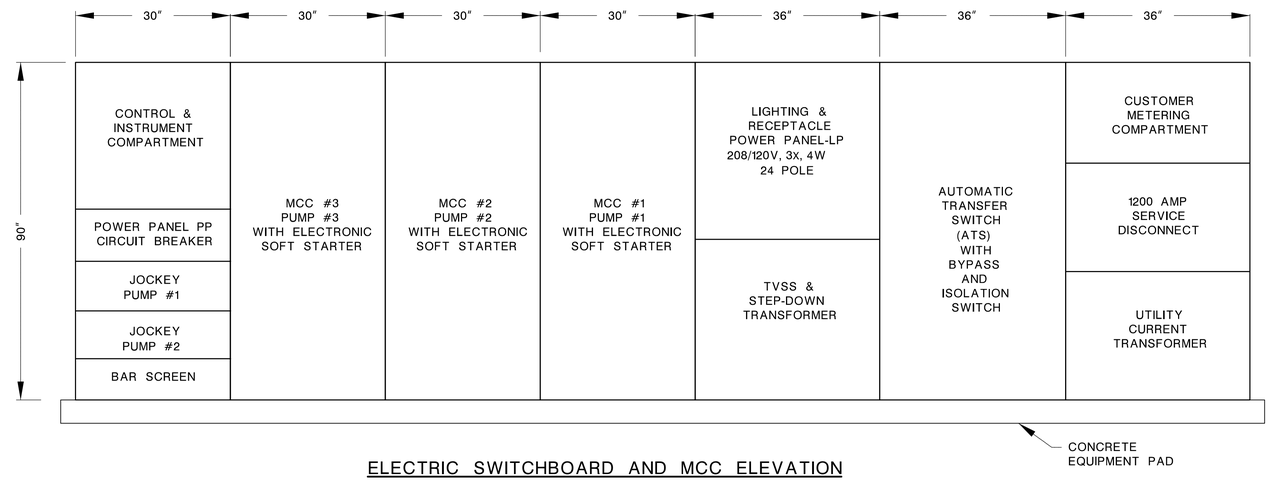

ELECTRIC SWITCHBOARD AND MCC ELEVATION

N.T.S.

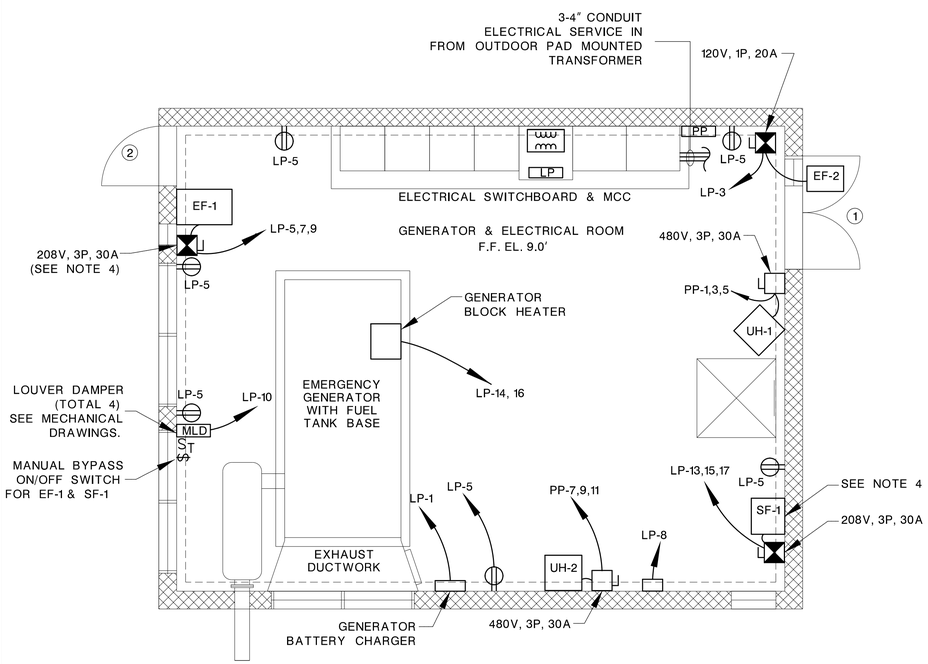

ELECTRIC POWER PLAN

SCALE: ¼"=1'-0"

ELECTRICAL NOTES:

1. REFER TO DRAWING E-1 FOR NOTES, LEGENDS AND ABBREVIATIONS.
2. INSTALL WALL SWITCHES AT 42" AFF, (TYPICAL).
3. THE CONTROLLERS FOR ALL THE PUMPS SHALL BE AFFIXED WITH A PERMANENT WAY TO LOCK OPEN THE CONTROLLERS FOR PUMP MAINTENANCE.
4. PROVIDE INTERLOCK WIRING BETWEEN SF-1 AND EF-1. WHEN EF-1 IS ON SF-1 SHALL ALSO BE ON. CONNECT TO THERMOSTAT IN WET WELL. SEE DWG. M-3, FOR THERMOSTAT LOCATION.
5. SEE MECHANICAL DWG. M-2, FOR THERMOSTAT LOCATIONS, FOR FAN & UH CONTROLS.
6. WIRE EMERGENCY BATTERY PACKS AHEAD OF ROOM SWITCH.

E-3 ELECTRICAL - FLOOR PLAN AND PANEL PLAN AND ELEVATION

DTL-18 / DTL-44

NEW JERSEY DEPARTMENT OF TRANSPORTATION

CONSTRUCTION DETAILS

ROUTE U.S. 46 LITTLE FERRY CIRCLE

CONTRACT NO. 069950373

STORMWATER PUMP STATION	
DEWBERRY ENGINEERS INC. COA#24GA28047600	PARSONS BRINCKERHOFF, INC.
200 BROADACRES DRIVE, BLOOMFIELD NJ 07003	CERTIFICATION OF AUTHORIZATION NO. 24GA28029800
SHAHIDUL H. JOARDER	MICHAEL D. HELMLINGER
N.J. PROFESSIONAL ENGINEER NO. 24GE04861900	N.J. PROFESSIONAL ENGINEER NO. 24GE03812100

144

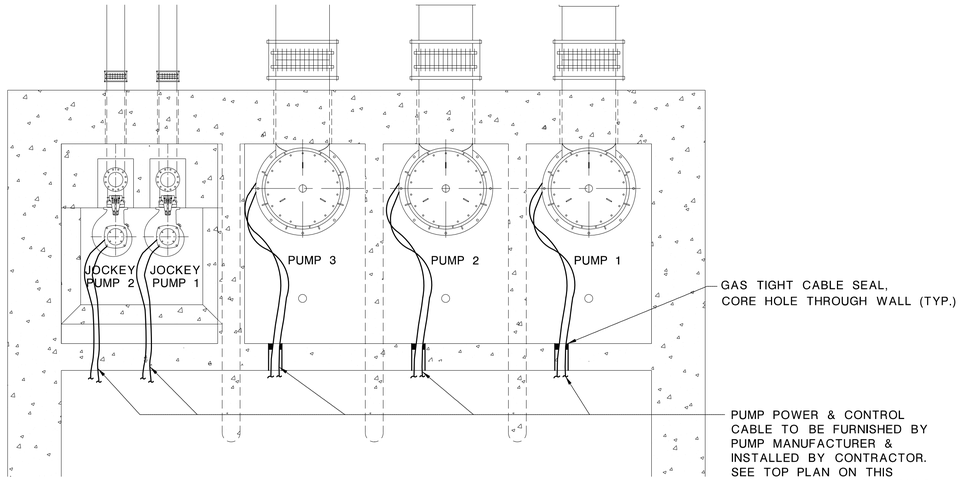

PLAN BENEATH PUMP BAY TOP SLAB

SCALE: ¼"=1'-0"

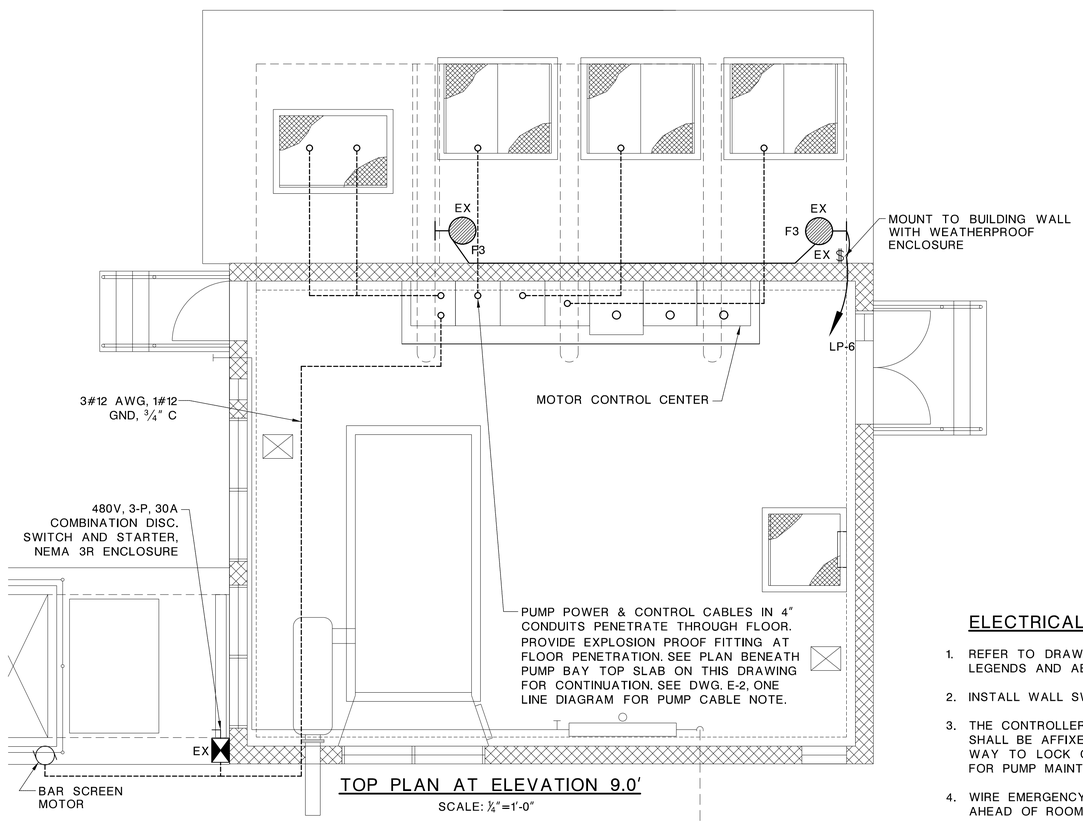

TOP PLAN AT ELEVATION 9.0'

SCALE: ¼"=1'-0"

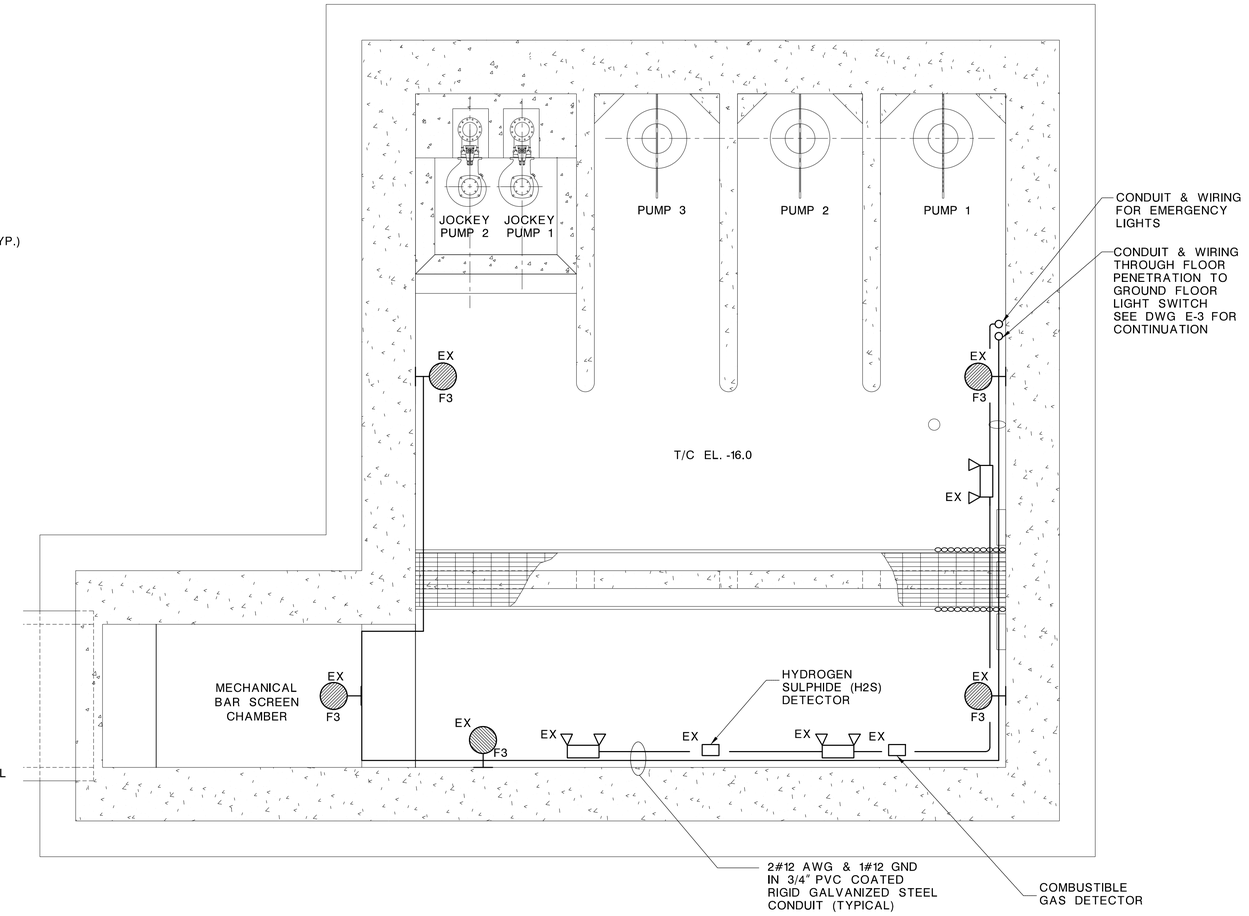

WET WELL LOWER PLAN

SCALE: ¼"=1'-0"

ELECTRICAL NOTES:

1. REFER TO DRAWING E-1 FOR NOTES, LEGENDS AND ABBREVIATIONS.
2. INSTALL WALL SWITCHES AT 48" AFF.
3. THE CONTROLLERS FOR ALL THE PUMPS SHALL BE AFFIXED WITH A PERMANENT WAY TO LOCK OPEN THE CONTROLLERS FOR PUMP MAINTENANCE.
4. WIRE EMERGENCY BATTERY PACK AHEAD OF ROOM SWITCH.

E-4 ELECTRICAL - LOWER LEVEL PLANS

DTL-19 / DTL-44

NEW JERSEY DEPARTMENT OF TRANSPORTATION

CONSTRUCTION DETAILS

ROUTE U.S. 46 LITTLE FERRY CIRCLE

CONTRACT NO. 069950373

STORMWATER PUMP STATION	
DEWBERRY ENGINEERS INC. COA#24GA28047600	PARSONS BRINCKERHOFF, INC.
200 BROADACRES DRIVE, BLOOMFIELD NJ 07003	CERTIFICATION OF AUTHORIZATION NO. 24GA28029800
SHAHIDUL H. JOARDER	MICHAEL D. HELMLINGER
N.J. PROFESSIONAL ENGINEER NO. 24GE04861900	N.J. PROFESSIONAL ENGINEER NO. 24GE03812100

145

GENERAL NOTES:

1. REFER TO DRAWING E-1 FOR ABBREVIATIONS, SYMBOLS LIST, AND GENERAL NOTES.

FIRE ALARM SYSTEM - SEQUENCE OF OPERATIONS:

1. UPON ALARM ACTIVATION OF AN INITIATING DEVICE, I.E. AREA SMOKE DETECTOR, HEAT DETECTOR, PULL STATION, ETC., A GENERAL ALARM SHALL BE INITIATED THROUGHOUT THE BUILDING. ALL HORNS THROUGHOUT THE BUILDING SHALL BE SOUNDED AND ALL STROBES SHALL FLASH. THE ALARM SHALL BE REPORTED TO THE BUILDING FACP.
2. UPON ALARM ACTIVATION OF AN INITIATING DEVICE, I.E. AREA SMOKE DETECTOR, HEAT DETECTOR, PULL STATION, ETC., SHALL AUTOMATICALLY SHUTDOWN ALL DESIGNATED SUPPLY, RETURN & EXHAUST FANS.
3. ACTIVATION OF ANY ALARM INITIATING DEVICE ANYWHERE WITHIN THE BUILDING, SHALL ACTIVATE DISPLAY ON THE FIRE ALARM CONTROL PANEL, AND SEND ALARM NOTIFICATION SIGNAL TO THE CENTRAL STATION.

FIRE ALARM SYSTEM DESCRIPTION:

1. FIRE ALARM SYSTEMS SHALL BE GENERAL ALARM TEMPORAL (CODE 3), ADDRESSABLE, MULTIPLEX INTERIOR FIRE ALARM SYSTEM, WHICH SHALL PROVIDE DISTINCTIVE THREE-PULSE TEMPORAL PATTERN FA EVACUATION SIGNAL IN ACCORDANCE WITH NFPA 72 AND ANSI S3.41.
2. EACH ALARM FROM AN INDIVIDUAL MANUAL STATION, SMOKE AND HEAT DETECTOR SHALL BE INDIVIDUALLY ANNUNCIATED AT THE CONTROL PANEL.
3. FIRE ALARM SYSTEMS SHALL HAVE ELECTRICALLY SUPERVISED WIRING. FIRE ALARM CONTROL PANEL, ALL DEVICES, COMPONENTS, EQUIPMENT AND ASSEMBLIES SHALL BE UL LISTED. THE CONTRACTOR SHALL SUBMIT SHOP DRAWINGS OF ALL DEVICES AND COMPONENTS, BEFORE INSTALLATION.
4. ALL STROBES SHALL BE SELF SYNCHRONIZED AND SHALL NOT REQUIRE EXTERNAL "SYNCH CONTROL" MODULE.

INSTALLATION NOTES:

1. MOUNTING HEIGHT OF MANUAL PULL STATIONS SHALL BE 48" A.F.F. TO THE PULL LEVER, IN ACCORDANCE WITH NFPA 72.
2. INSTALL STROBE AND HORNS AT 6'-8" AFF TO THE BOTTOM OF LENS (NFPA-72).
3. INSTALLATION OF ALL WIRING, CABLE AND EQUIPMENT SHALL COMPLY WITH THE NATIONAL ELECTRICAL CODE NFPA 70 AND NATIONAL FIRE ALARM CODE NFPA 72.
4. FIRE ALARM CONTROL PANEL ENCLOSURES SHALL BE PERMANENTLY GROUNDED TO THE PANEL GROUND LUGS AND CHASIS. ALL FIRE ALARM SYSTEMS SHALL TEST FREE OF GROUNDS.
5. ALL CONTROL PANELS, AND ALARM SILENCE SWITCHES SHALL BE PROPERLY LABELED.
6. THE RATING OF THE STROBE UNITS SHALL BE 110 CANDELA AND SHALL COMPLY WITH THE AMERICANS WITH DISABILITIES ACT (ADA) AND UL 1971.
7. SMOKE/HEAT DETECTORS SHALL BE INSTALLED AT THE HIGHEST POINT OF THE CEILING IN ACCORDANCE WITH NFPA 72.
8. FIRE ALARM CONTROL PANEL SHALL HAVE BATTERY BACKUP, WITH BATTERY CHARGER AS PER NFPA-72 REQUIREMENTS.
9. FIRE ALARM FUSE CUTOUT PANEL SHALL BE COLORED RED AND LOCKED.
10. PROVIDE DACT PANEL FOR CENTRAL STATION CONNECTION.
11. PROVIDE TWO DEDICATED TELEPHONE LINE CONNECTIONS TO DACT PANEL.
12.

WIRING NOTES:

1. ALL WIRING SHALL BE COLOR CODED THROUGHOUT, TO COMPLY WITH THE NATIONAL FIRE ALARM CODE NFPA-72, NATIONAL ELECTRICAL CODE NFPA 70 AND LOCAL FIRE CODE AND STANDARDS AND IN COMPLIANCE WITH LOCAL AUTHORITIES HAVING JURISDICTION.
2. NUMBER OF CONDUCTORS AND SIZE OF CONDUCTORS SHALL BE AS PER MANUFACTURER'S REQUIREMENT AND AS PER CODE.
3. ALL RISERS WIRING SHALL BE IN 1" RGS CONDUIT AND ALL HORIZONTAL RUN IN EACH FLOOR SHALL BE IN 3/4" RGS CONDUIT. ALL WIRES SHALL BE TYPE THHN, 90 DEG. CELSIUS RATED, OR TYPE FPLP, 150 DEG. CELSIUS RATED, AS PER CODE.
4. CIRCUITS FROM THE FIRE ALARM CONTROL PANEL TO THE SYSTEM PERIPHERAL EQUIPMENT SHALL BE A MINIMUM OF AS FOLLOWS:
   a. EACH ADDRESSABLE ALARM INITIATING OR SUPERVISORY CIRCUIT: TWO (2) NO. 16 AWG TWISTED SHIELDED CONDUCTORS.
   b. EACH ALARM NOTIFICATION CIRCUIT FOR HORN UNITS: ONE PAIR (2) NO. 14 AWG. CONDUCTORS.
   c. EACH ALARM NOTIFICATION CIRCUIT FOR STROBE UNITS: ONE PAIR (2) NO. 14 AWG. CONDUCTORS.
   d. EACH CONTROL CIRCUIT: TWO (2) NO. 14 AWG. CONDUCTORS.
5. WIRING FOR POWER CIRCUITS SHALL BE A MINIMUM OF TWO (2) NO. 12 AWG AND 1 NO. 12 AWG GROUND WIRE, TYPE THHN-90 DEG. C RATED IN RACEWAY.
6. PROVIDE TWO DEDICATED TELEPHONE LINES FOR CENTRAL STATION CONNECTION OF DIGITAL ALARM COMMUNICATOR TRANSMITTER (DACT) VIA TELEPHONE LINES.

SHOP DRAWINGS SUBMITTAL NOTES:

A. AS PER IBC 907.1.1, SUBMIT SHOP DRAWINGS THAT INCLUDE BUT ARE NOT LIMITED TO, ALL OF THE FOLLOWING:

1. A FLOOR PLAN DRAWN TO SCALE WHICH INDICATES THE USE OF ALL ROOMS.
2. LOCATIONS OF ALARM-INITIATING AND NOTIFICATION APPLIANCES, INCLUDING CANDELLA RATINGS FOR VISIBLE ALARM NOTIFICATION APPLIANCES.
3. ALARM CONTROL AND TROUBLE SIGNALING EQUIPMENT.
4. ANNUNCIATION.
5. POWER CONNECTION.
6. BATTERY CALCULATIONS.
7. CONDUCTOR TYPE AND SIZES.
8. VOLTAGE DROP CALCULATIONS.
9. MANUFACTURERS DAT SHEETS, MODEL NUMBERS AND LISTING INFORNATION FOR EQUIPMENT, DEVICES AND MATERIALS.
10. DETAILS OF CEILING HEIGHTS AND CONSTRUCTION.
11. THE INTERFACE OF FIRE SAFETY CONTROL FUNCTIONS.
12. LOCATION OF FIRE ALARM CONTROL UNIT, TRANSPONDERS AND NOTIFICATION POWER SUPPLIES.
13. CLASSIFICATION OF THE SUPERVISING STATION.
14. FIRE DEPARTMENT RESPONSE POINT(S) AND ANNUNCIATOR LOCATION(S).
15. COMPLETE SEQUENCE OF OPERATIONS DETAILING ALL INPUTS AND OUTPUTS.

B. AS PER NFPA 72 - 5.12.6, PROVIDE ON SHOP DRAWING A MANUAL FIRE ALARM BOX LOCATED WITHIN 5 FEET OF EXIT DOORWAY AT EACH EXIT.

C. AS PER NJAC 5:23-2.15 (F) VII, THE SHOP DRAWING SUBMISSION MUST BE SIGNED AND SEALED BY A LICENSED NEW JERSEY PROFESSIONAL ENGINEER.

FIRE ALARM SYSTEM LEGEND:

F	FIRE ALARM PULL STATION.
F	FIRE ALARM HORN/STROBE.
R	FAN SHUTDOWN RELAY
H	FIRE ALARM CEILING HEAT DETECTOR.
FACP	FIRE ALARM SYSTEM CONTROL PANEL.
DACT	DIGITAL ALARM COMMUNICATOR TRANSMITTER

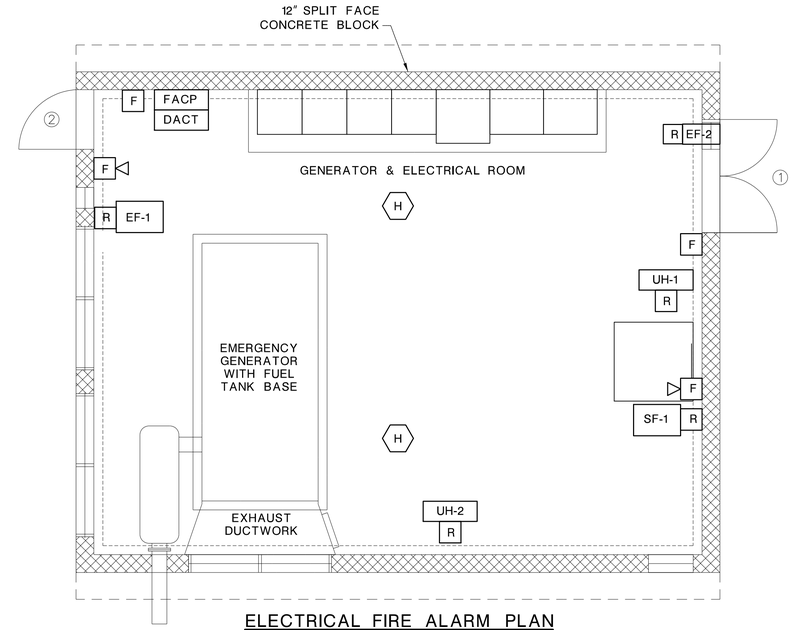

ELECTRICAL FIRE ALARM PLAN

SCALE: ½"=1'-0"

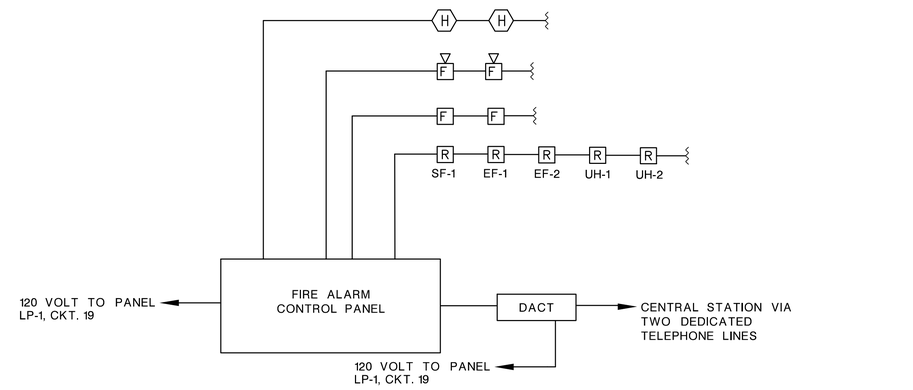

ELECTRICAL FIRE ALARM SYSTEM RISER DIAGRAM

NOT TO SCALE

E-5 ELECTRICAL - FIRE ALARM PLAN, NOTES AND RISER

DTL-20 / DTL-44

NEW JERSEY DEPARTMENT OF TRANSPORTATION

CONSTRUCTION DETAILS

ROUTE U.S. 46 LITTLE FERRY CIRCLE

CONTRACT NO. 069950373

STORMWATER PUMP STATION	
DEWBERRY ENGINEERS INC. COA#24GA28047600	PARSONS BRINCKERHOFF, INC.
200 BROADACRES DRIVE, BLOOMFIELD NJ 07003	CERTIFICATION OF AUTHORIZATION NO. 24GA28029800
SHAHIDUL H. JOARDER	MICHAEL D. HELMLINGER
N.J. PROFESSIONAL ENGINEER NO. 24GE04861900	N.J. PROFESSIONAL ENGINEER NO. 24GE03812100

radiwinarso 3/6/2013 4:42:19 PM pdf.pltcfg $$$$$$$MODEL$$$$$$$ 30–Scale 50006425–Little–Ferry–PS Q:\50006425\CAD\Civil\FD Revised 02.12.13\E–5.dgn

GENERAL NOTES:

1. REFER TO DRAWING E-1 FOR ABBREVIATIONS, SYMBOLS LIST, AND GENERAL NOTES.

SECURITY SYSTEM LEGEND:

DC	SECURITY DOOR CONTACT
MD	SECURITY MOTION DETECTOR
A	AMBER SECURITY HORN AND STROBE LIGHT
SSCP	SECURITY SYSTEM CONTROL PANEL.

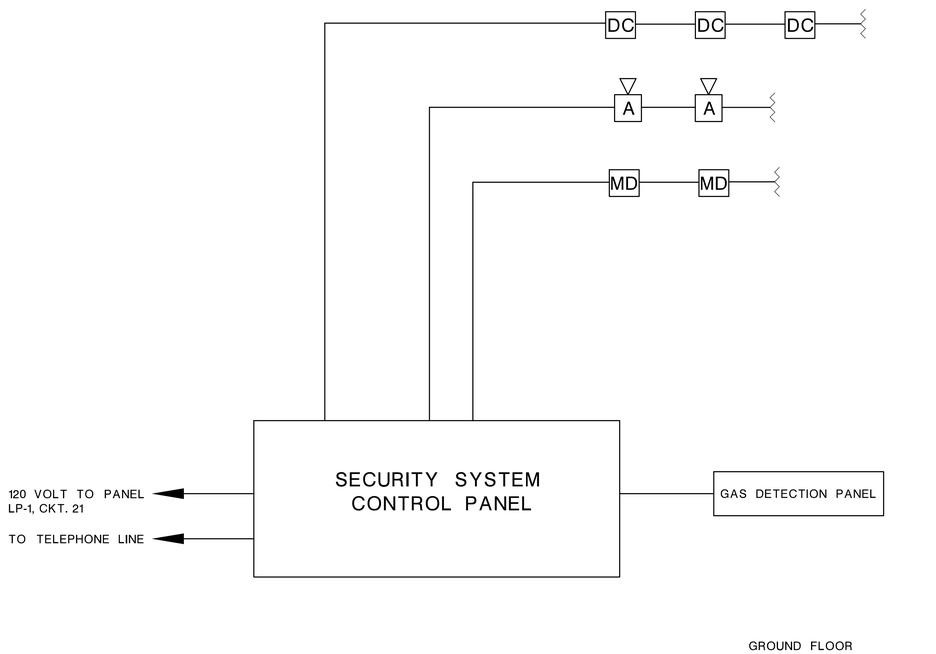

SECURITY RISER DIAGRAM
NOT TO SCALE

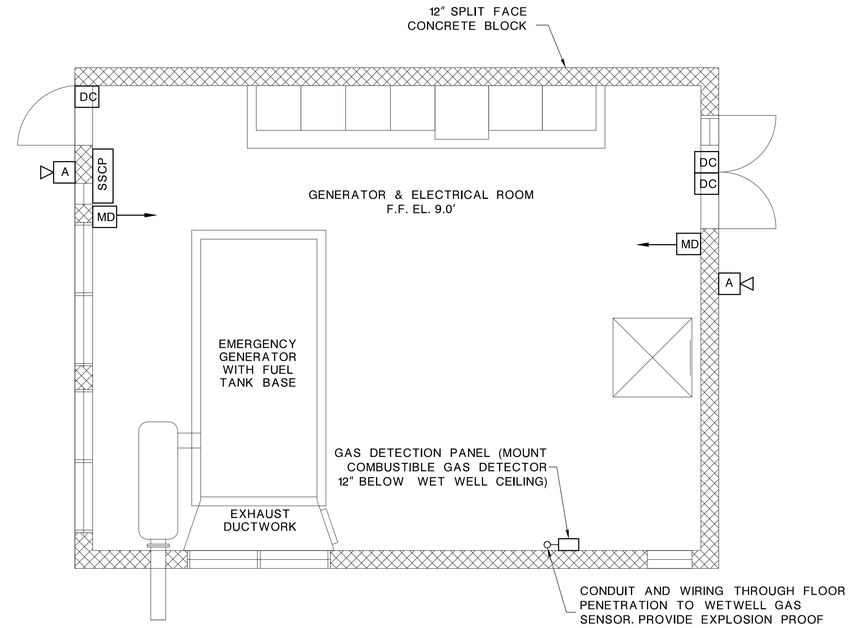

SECURITY SYSTEM PLAN
SCALE: ¼"=1'-0"

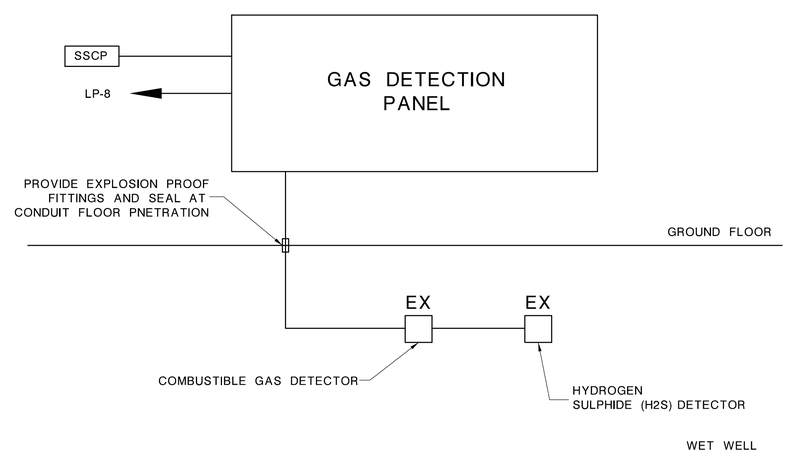

GAS DETECTION RISER DIAGRAM
NOT TO SCALE

E-6 ELECTRICAL - SECURITY AND INTRUSION DETECTION PLAN

DTL-21 / DTL-44

NEW JERSEY DEPARTMENT OF TRANSPORTATION

CONSTRUCTION DETAILS

ROUTE U.S. 46 LITTLE FERRY CIRCLE

CONTRACT NO. 069950373

STORMWATER PUMP STATION	
DEWBERRY ENGINEERS INC. COA#24GA28047600	PARSONS BRINCKERHOFF, INC.
200 BROADACRES DRIVE, BLOOMFIELD NJ 07003	CERTIFICATION OF AUTHORIZATION NO. 24GA28029800
SHAHIDUL H. JOARDER	MICHAEL D. HELMLINGER
N.J. PROFESSIONAL ENGINEER NO. 24GE04861900	N.J. PROFESSIONAL ENGINEER NO. 24GE03812100

radiwinarso 3/6/2013 4:42:22 PM pdf.pltcfg $$$$$$$$MODEL$$$$$$$ 30-Scale 50006425-Little-Ferry-PS Q:\50006425\CAD\Civil\FD Revised 02.12.13\E-6.dgn

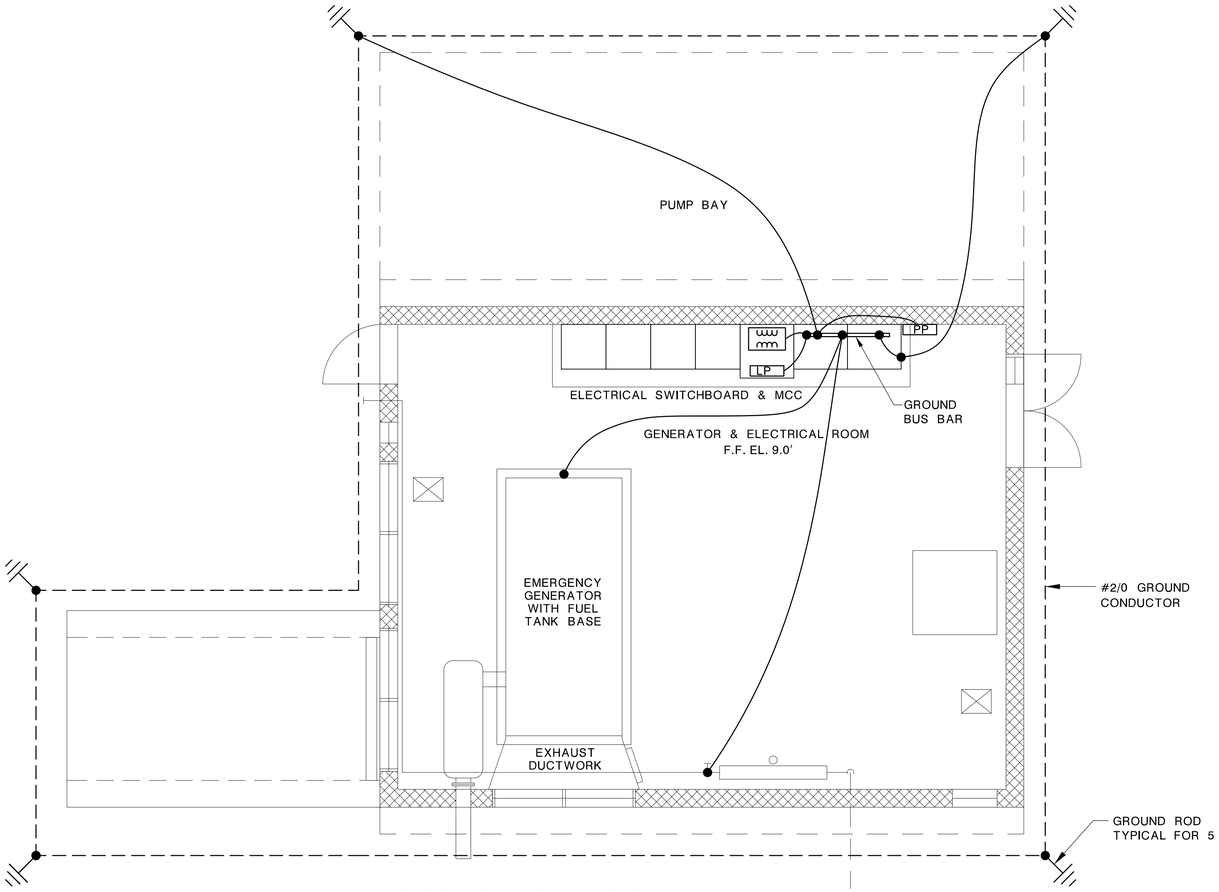

ELECTRIC GROUNDING PLAN

SCALE: ¼"=1'-0"

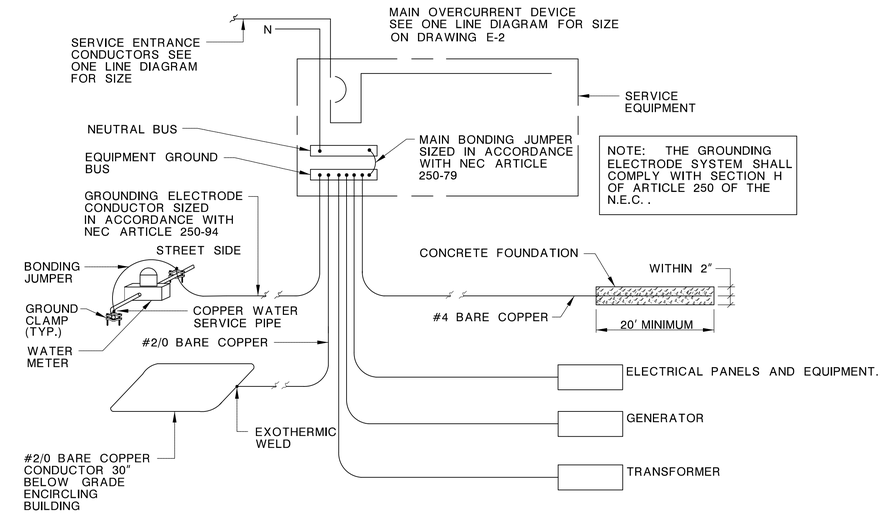

SERVICE GROUNDING DETAIL

N.T.S.

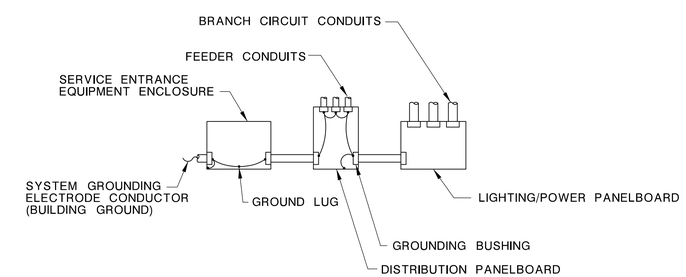

RACEWAY AND EQUIPMENT GROUNDING SYSTEM

N.T.S.

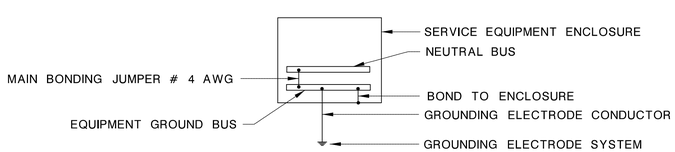

GROUND BUS AND NEUTRAL BUS BONDING DETAIL

N.T.S.

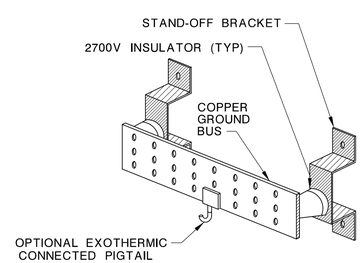

GROUND BAR DETAIL

N.T.S.

E-7 ELECTRICAL - GROUNDING PLAN AND DETAILS

DTL-22 / DTL-44

NEW JERSEY DEPARTMENT OF TRANSPORTATION

CONSTRUCTION DETAILS

ROUTE U.S. 46 LITTLE FERRY CIRCLE

CONTRACT NO. 069950373

STORMWATER PUMP STATION	
DEWBERRY ENGINEERS INC. COA#24GA28047600	PARSONS BRINCKERHOFF, INC.
200 BROADACRES DRIVE, BLOOMFIELD NJ 07003	CERTIFICATION OF AUTHORIZATION NO. 24GA28029800
SHAHIDUL H. JOARDER	MICHAEL D. HELMLINGER
N.J. PROFESSIONAL ENGINEER NO. 24GE04861900	N.J. PROFESSIONAL ENGINEER NO. 24GE03812100

radiwinarso 3/6/2013 4:42:24 PM pdf.pltcfg $$$$$$$MODEL$$$$$$$ 30-Scale 50006425-Little-Ferry-PS Q:\50006425\CAD\Civil\FD Revised 02.12.13\E-7.dgn

GENERAL NOTES:

1. THE CONTRACTOR SHALL VISIT THE PREMISES TO DETERMINE EXISTING CONDITIONS AND COMPARE SAME WITH CONTRACT DRAWINGS AND SPECIFICATIONS. THE CONTRACTOR IS TO SATISFY HIMSELF OF ALL CONDITIONS PRIOR TO THE SUBMISSION OF A BID PROPOSAL. NO ALLOWANCE WILL BE MADE FOR FAILURE TO COMPLY WITH THESE REQUIREMENTS AND A BID PROPOSAL SHALL BE CONSTRUED AS EVIDENCE HE HAS DONE SO.

2. ALL HVAC WORK SHALL BE COORDINATED WITH ALL TRADES INVOLVED. OFFSETS IN PIPING AND DUCTS (INCLUDING DIVIDED DUCTS) AND TRANSITIONS AROUND OBSTRUCTIONS SHALL BE PROVIDED AT NO ADDITIONAL COST TO THE OWNER.

3. VERIFY ALL EQUIPMENT CONNECTIONS WITH MANUFACTURER'S CERTIFIED DRAWINGS. VERIFY AND PROVIDE DUCT TRANSITIONS TO FURNISHED EQUIPMENT. FIELD VERIFY AND COORDINATE ALL DIMENSIONS BEFORE FABRICATION.

4. COORDINATE DUCTWORK WITH APPROVED SUBMISSION OF SUPPLY, RETURN & EXHAUST AIR TERMINAL UNIT SIZES AND ASSOCIATED INLET AND OUTLET CONNECTIONS.

5. PROVIDE ACCESS PANELS UPSTREAM OF ALL ELBOWS WITH TURNING VANES AND VOLUME DAMPERS.

6. PROVIDE ACCESS PANELS IN DUCTWORK FOR OPERATION, ADJUSTMENT & MAINTENANCE OF ALL FANS, VALVES AND MECHANICAL EQUIPMENT.

7. ACCESS DOORS INTO DUCTWORK SHALL NOT BE SMALLER THAN 8"X8" UNLESS DUCT SIZES DO NOT PERMIT. INDICATE SIZE AND LOCATIONS OF ALL ACCESS DOORS.

8. FOR AREAS WITH INACCESSIBLE CEILINGS, VOLUME DAMPERS SHALL HAVE METAL FLEXIBLE CABLE OPERATORS FOR REMOTE OPERATION OF VOLUME DAMPER THROUGH FACE OF AIR OUTLETS.

9. PROVIDE VOLUME DAMPERS IN ALL SUPPLY, RETURN AND EXHAUST BRANCH DUCTWORK.

10. ALL AIR OUTLETS (DIFFUSERS, GRILLES, REGISTERS, LINEAR DIFFUSERS, ETC.) SHALL BE COORDINATED WITH THE ARCHITECTURAL CEILING PLAN (LIGHTS, SPRINKLER HEADS, CEILING GRID) AND WITH REVIEWED AND APPROVED AIR OUTLET SUBMITTAL.

11. ENGINEER TO REVIEW AND APPROVE FACE SIZE AND EXACT LOCATION OF ALL AIR OUTLETS (DIFFUSERS, GRILLES, REGISTERS, ETC.) AND COORDINATE WITH EQUIPMENT MANUFACTURER REQUIREMENTS.

12. PROVIDE FLEXIBLE DUCT CONNECTIONS ON ALL DUCTS CONNECTING TO FANS OR AIR HANDLING UNITS.

13. SHEETMETAL SHOP DRAWINGS CAN BE RELEASED FOR FABRICATION ONLY AFTER SHEETMETAL SHOP STANDARDS HAVE BEEN REVIEWED AND APPROVED.

14. SHEETMETAL SHOP DRAWINGS MUST BE COORDINATED WITH ALL TRADES (MECHANICAL, ELECTRICAL, PLUMBING, FIRE PROTECTION, ETC.) BEFORE FABRICATION.

15. CONTRACTOR TO COORDINATE DUCT LOCATIONS WITH STRUCTURAL AND ARCHITECTURAL DRAWINGS.

16. PROVIDE BRANCH CONNECTION TAPS AS INDICATED IN DETAIL ON DETAIL DRAWINGS. ANY OTHER TAP BRANCH CONNECTIONS ARE NOT ACCEPTABLE.

17. ALL DUCT SIZES SHOWN ARE CLEAR INSIDE DIMENSIONS.

18. ALL EQUIPMENT, PIPING, DUCTWORK, ETC. SHALL BE SUPPORTED AS DETAILED AND SPECIFIED. ADDITIONAL SUPPORT SHALL BE PROVIDED AS REQUIRED TO PROVIDE VIBRATION-FREE INSTALLATION.

19. ALL FIRE AND FIRE/SMOKE DAMPERS MUST BE INSTALLED IN STRICT ACCORDANCE WITH THE LATEST UL REQUIREMENTS, PER THE CONDITIONS OF THEIR LISTING AND THE MANUFACTURER'S INSTALLATION REQUIREMENTS.

20. ALL CONTROL WIRE AND CONDUIT SHALL COMPLY WITH NEC AND ELECTRICAL PROJECT SPECIFICATIONS.

21. PROVIDE, AS REQUIRED BY CODE (LOCAL OR NATIONAL), ANY ADDITIONAL FIRE DAMPERS, SMOKE DAMPERS, ACCESS PANELS, OR SPECIAL SUPPORTS NOT SHOWN ON PLANS AT NO ADDITIONAL COST TO OWNER.

22. THE CONTRACTOR IS TO BALANCE ALL DUCT SYSTEMS AND PROVIDE ALL NECESSARY BELTS, PULLEYS, SHEAVES, ETC. TO ACHIEVE THE DESIGN AIR QUANTITIES. NEWLY DESIGNED AREAS SHALL BE BALANCED TO THE INDICATED AIR QUANTITIES ON THE DRAWINGS. ALL EXISTING AREAS SHALL BE REBALANCED TO THE ORIGINAL DESIGN REQUIREMENTS. ALL BALANCED AIR QUANTITIES ARE TO BE WITHIN 5% OF DESIGN AIR QUANTITIES.

23. ALL SQUARE ELBOWS ON DUCTWORK ARE TO HAVE DOUBLE THICKNESS TURNING VANES.

24. CONTRACTOR IS TO PROVIDE MANUAL DAMPERS IN EACH SPLIT OR TAP CONNECTION TO TRUNK DUCTS FOR BALANCING PURPOSES, EACH PROVIDED WITH OPERATOR AND LOCKING DEVICE. INSTALL DIVERTING VANES AT BRANCHES CONNECTED INTO THE MAIN WITHOUT A NECK.

25. THE CONTRACTOR SHALL COORDINATE OPENINGS IN THE EXTERIOR WALLS OR ROOFS FOR THE INSTALLATION OF OUTSIDE AIR LOUVERS OR GOOSENECKS.

26. FIRE STOPPING SHALL BE INSTALLED AT ALL PENETRATIONS OF FIRE RATED CONSTRUCTION.

27. AFTER FINAL TESTS AND ADJUSTMENTS, FULLY INSTRUCT OWNER'S OPERATING PERSONNEL IN ALL DETAILS OF OPERATION FOR EQUIPMENT INSTALLED. A SIGNED RECEIPT WHICH SHALL BE OBTAINED FROM THE OPERATOR SHALL BE CONSTRUED AS EVIDENCE THAT INSTRUCTIONS WERE SATISFACTORY.

28. FURNISH TWO (2) COPIES OF WRITTEN DESCRIPTIONS OF ALL SYSTEMS COVERING ALL MANUAL OPERATING PROCEDURE, AUTOMATIC CONTROL DESCRIPTIONS AND AUTOMATIC CONTROL TEMPERATURE AND PRESSURE SETTINGS. WRITTEN DESCRIPTIONS SHALL INCLUDE LUBRICATION SCHEDULES, PARTS LISTS, PERFORMANCE SERVICES FOR EQUIPMENT, FILTER SIZE/QUANTITY SCHEDULE, ETC. WHEN MANUFACTURER'S STANDARD INSTRUCTIONS ARE UTILIZED, THEY SHALL BE CLEARLY MARKED TO INDICATE APPLICABILITY.

CODES, PERMITS AND INSPECTIONS:

1. ALL WORK SHALL MEET OR EXCEED LATEST REQUIREMENT OF THE LATEST EDITION OF THE LOCAL BUILDING CODE AND OTHER AUTHORITIES EXERCISING JURISDICTION OF THE WORK OF THIS PROJECT.

2. ANY PORTION OF WORK WHICH IS NOT SUBJECT TO THE APPROVAL OF AN AUTHORITY HAVING JURISDICTION SHALL BE PROVIDED IN ACCORDANCE WITH NATIONAL FIRE PROTECTION ASSOCIATION (NFPA) REQUIREMENTS.

3. SECURE PERMITS AND INSPECTION CERTIFICATES AND TRANSMIT SAME TO THE OWNER AT THE COMPLETION OF THE WORK.

4. CONTRACTOR SHALL BE RESPONSIBLE FOR FILING ALL DOCUMENTS WITH ALL REQUIRED AGENCIES.

HVAC GENERAL NOTES:

1. CONTRACTOR SHALL CHECK AND VERIFY ALL DIMENSIONS AT THE SITE BEFORE FABRICATING OR ORDERING ANY INSTALLATION MATERIALS.

2. THE WORK SHOWN IS INTENDED TO INCLUDE COMPLETE AND PROPER HEATING AND VENTILATING, ALL AS SHOWN ON PLANS AND AS SPECIFIED. ALL LABOR, EQUIPMENT, MATERIALS, AND ACCESSORIES FOR A COMPLETE AND PROPER INSTALLATION, AND AS MAY BE REQUIRED FOR A PROPER SYSTEM, SHALL BE FURNISHED UNDER THIS CONTRACT.

3. CONTRACTOR SHALL BE RESPONSIBLE FOR PROPER INSTALLATION OF ALL MATERIALS AND EQUIPMENT REQUIRED FOR A COMPLETE INSTALLATION WITHIN THE INTENT AND MEANING OF THE CONTRACT DOCUMENTS.

4. CONTRACTOR MUST COMPLY WITH ALL LAWS, ORDINANCES, AND REGULATIONS OF ALL AUTHORITIES HAVING JURISDICTION, EITHER MUNICIPAL, COUNTY, STATE, FEDERAL, OR PUBLIC UTILITY.

5. ALL MATERIALS MUST BE INSTALLED BY SKILLED MECHANICS IN ACCORDANCE WITH BEST PRACTICES OF THE INDUSTRY.

6. THE DRAWINGS ARE DIAGRAMMATIC AND INDICATIVE OF THE WORK TO BE PERFORMED. HOWEVER, IT IS NOT INTENDED THAT THEY SHOW EVERY FITTING OR APPURTENANCES REQUIRED FOR A COMPLETE INSTALLATION.

7. THE DRAWINGS MUST BE FOLLOWED AS CLOSELY AS CIRCUMSTANCES WILL PERMIT. SHOULD IT BE FOUND THAT ANY SYSTEM OR EQUIPMENT CANNOT BE INSTALLED AS SHOWN ON THE DRAWINGS, THE PROFESSIONAL SHALL BE CONSULTED BEFORE INSTALLING OR MAKING CHANGES TO THE DESIGN.

8. CONTRACTOR SHALL CAREFULLY INVESTIGATE THE WORK SITE CONDITIONS THAT WOULD AFFECT THE WORK TO BE PERFORMED AND SHALL ARRANGE SUCH WORK ACCORDINGLY FURNISHING: REQUIRED DUCTWORK OFFSETS, FITTINGS, AND ACCESSORIES TO MEET SUCH CONDITIONS.

9. CONTRACTOR SHALL PATCH, REPAIR, AND PAINT TO MATCH ADJACENT SURFACES, ALL SURFACES DAMAGED OR OTHERWISE MARKED DUE TO INSTALLATION OF NEW, HVAC EQUIPMENT, DUCTWORK AND RELATED APPURTENANCES.

10. HVAC SYSTEMS SHALL BE BALANCED AS PER VALUES INDICATED ON PLANS AND SCHEDULES AND AS PER SPECIFICATIONS.

HVAC SYMBOLS LIST

T	THERMOSTAT
	VERTICAL SUPPLY DUCT
	VERTICAL RETURN OR EXHAUST DUCT

FAN SCHEDULE

MARK	CFM	S.P.(IN.W.G.)	HP	ELECT.	SIZE	REMARKS
SF-1	2160	0.5	1/2	208V/3ϕ	16.5"ϕ	CAST ALUMINUM, BELT DRIVEN
EF-1	2160	0.5	1/2	208V/3ϕ	16.5"ϕ	CAST ALUMINUM, BELT DRIVEN
EF-2	1250	0.25	1/4	120V/1ϕ	12.5"ϕ	CAST ALUMINUM, DIRECT DRIVEN

ELECTRIC UNIT HEATER SCHEDULE

MARK	INPUT BTUH	FAN HP	SERVICE	FAN CFM	ELEC HEATER	REMARKS
UH-1	23,500	1/4	ELECTRIC	2500	10 KW	WALL MOUNTED; 480V/3ϕ, W/ INTERGRAL 2 STAGE THERMOSTAT
UH-2	23,500	1/4	ELECTRIC	2500	10 KW	WALL MOUNTED; 480V/3ϕ, W/ INTERGRAL 2 STAGE THERMOSTAT

COMBINATION LOUVER/DAMPER SCHEDULE

MARK	DIMENSION			MIN. EFECTIVE AREA (SQ. FT.)	INSTALL HEIGHT	AIR FLOW DIRECTION	MANUFACTURER & MODEL NO.	REMARKS
	WIDTH	HEIGHT	DEPTH					
L-1	48	78	6	13.43	1'-0" AFF	INTAKE	BASIS: GREENHECK DAMPER MODEL: EAC-601 ACTUATOR MODEL: MS4120F1204	FIXED DRAINABLE BLADE EXTRUDED ALUMINUM LOUVER/DAMPER W/INSECT SCREEN AND 120V ACTUATOR. NORMALLY CLOSED BY POWERED DAMPER ACTUATOR AND FAIL OPEN DURING POWER FAILURE
L-2	48	78	6	13.43	1'-0" AFF	INTAKE		
L-3	48	78	6	13.43	1'-0" AFF	INTAKE		
L-4	48	78	6	13.43	1'-0" AFF	INTAKE		
L-5	48	96	6	15.84	1'-0" AFF	DISCHARGE	GCE-402	FIXED DRAINABLE BLADE EXTRUDED ALUMINUM LOUVER W/INSECT SCREEN, AND GRAVITY BACKDRAFT DAMPER
L-6	48	96	6	15.84	1'-0" AFF	DISCHARGE	GCE-402	FIXED DRAINABLE BLADE EXTRUDED ALUMINUM LOUVER W/INSECT SCREEN, AND GRAVITY BACKDRAFT DAMPER
L-7	30	24	4	2.07	8'-9" AFF	INTAKE	GCI-402	FIXED DRAINABLE BLADE EXTRUDED ALUMINUM LOUVER W/INSECT SCREEN, AND GRAVITY BACKDRAFT DAMPER
L-8	14	18	4	0.60	9'-9" AFF	DISCHARGE	GCE-402	FIXED DRAINABLE BLADE EXTRUDED ALUMINUM LOUVER W/INSECT SCREEN, AND GRAVITY BACKDRAFT DAMPER
L-9	14	14	4	0.44	9'-6" AFF	DISCHARGE	GCE-402	FIXED DRAINABLE BLADE EXTRUDED ALUMINUM LOUVER W/INSECT SCREEN, AND GRAVITY BACKDRAFT DAMPER

M-1 MECHANICAL - NOTES AND SYMBOLS

DTL-23 / DTL-44

NEW JERSEY DEPARTMENT OF TRANSPORTATION

CONSTRUCTION DETAILS

ROUTE U.S. 46 LITTLE FERRY CIRCLE

CONTRACT NO. 069950373

STORMWATER PUMP STATION
DEWBERRY ENGINEERS INC. COA#24GA28047600
200 BROADACRES DRIVE, BLOOMFIELD NJ 07003

SHAHIDUL H. JOARDER
N.J. PROFESSIONAL ENGINEER NO. 24GE04861900

PARSONS BRINCKERHOFF, INC.
CERTIFICATION OF AUTHORIZATION NO. 24GA28029800

MICHAEL D. HELMLINGER
N.J. PROFESSIONAL ENGINEER NO. 24GE03812100

149

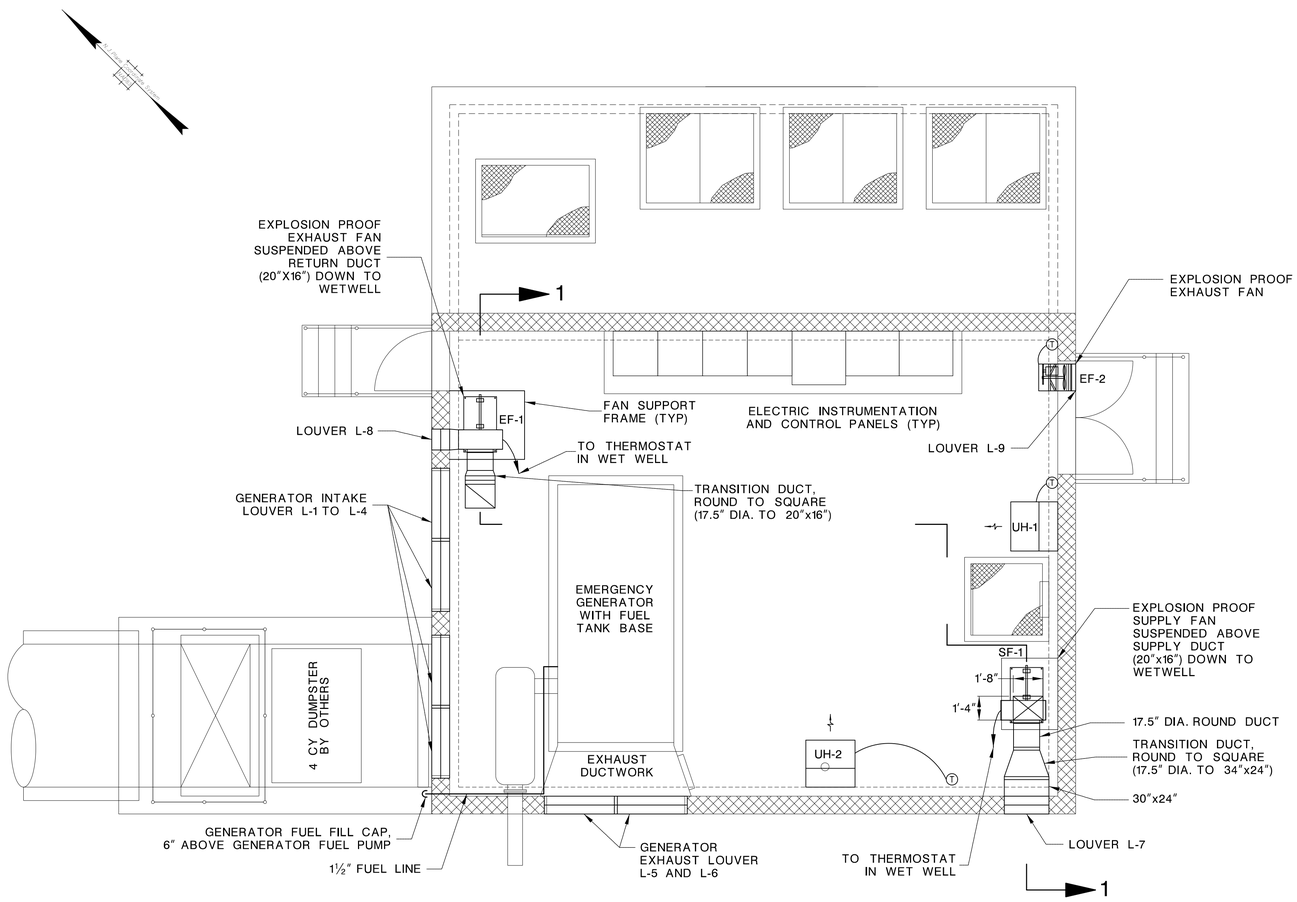

TOP PLAN AT ELEVATION 9.0

SCALE: ¼"=1'-0"

M-2 MECHANICAL - TOP HVAC PLAN

DTL-24 / DTL-44

NEW JERSEY DEPARTMENT OF TRANSPORTATION

CONSTRUCTION DETAILS

ROUTE U.S. 46 LITTLE FERRY CIRCLE

CONTRACT NO. 069950373

STORMWATER PUMP STATION	
DEWBERRY ENGINEERS INC. COA#24GA28047600	PARSONS BRINCKERHOFF, INC.
200 BROADACRES DRIVE, BLOOMFIELD NJ 07003	CERTIFICATION OF AUTHORIZATION NO. 24GA28029800
SHAHIDUL H. JOARDER	MICHAEL D. HELMLINGER
N.J. PROFESSIONAL ENGINEER NO. 24GE04861900	N.J. PROFESSIONAL ENGINEER NO. 24GE03812100

150

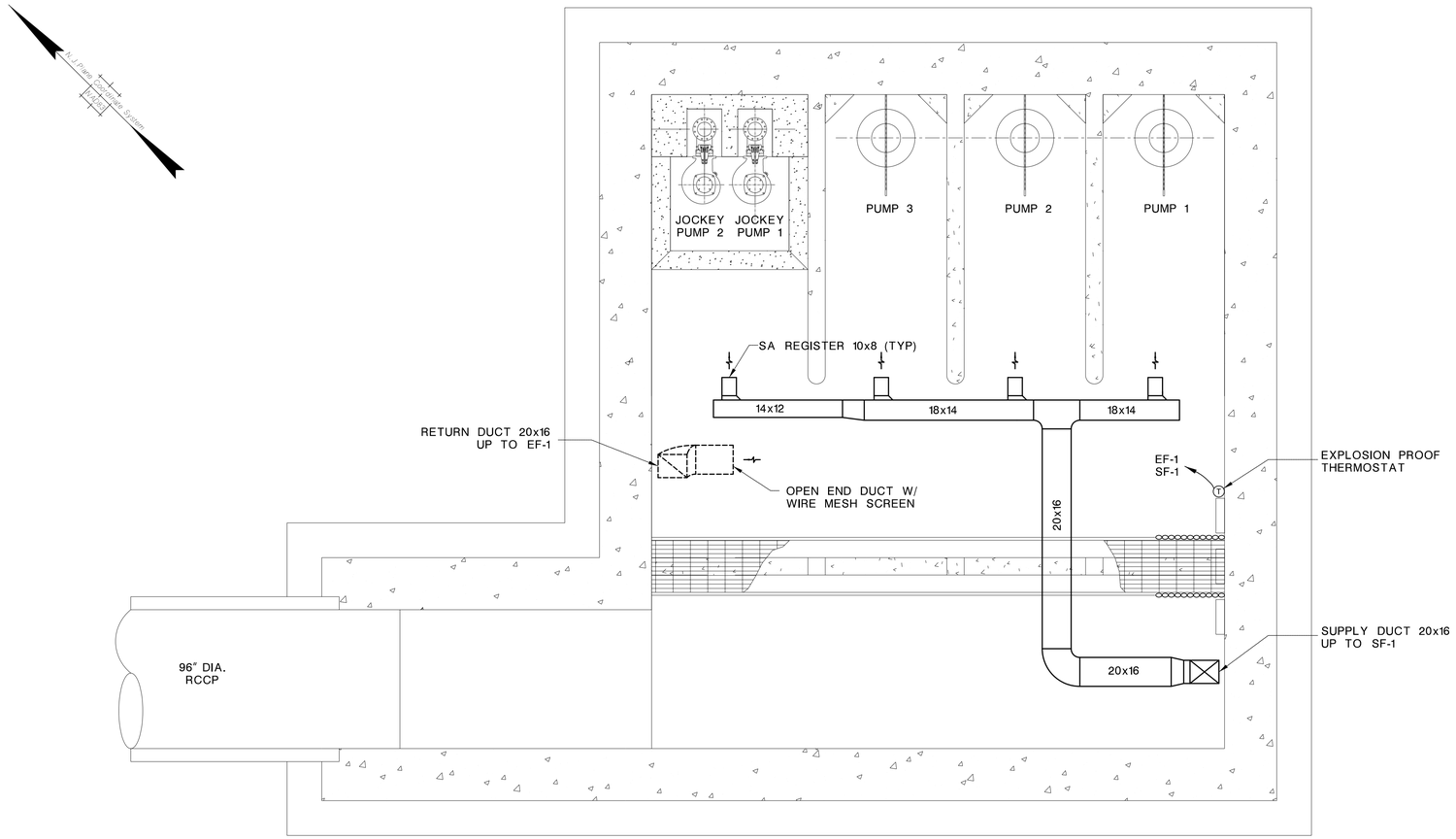

NOTE: DUCT DIMENSIONS IN INCHES

LOWER PLAN

SCALE: ¼"=1'-0"

M-3 MECHANICAL - LOWER HVAC PLAN

DTL-25 / DTL-44

NEW JERSEY DEPARTMENT OF TRANSPORTATION

CONSTRUCTION DETAILS

ROUTE U.S. 46 LITTLE FERRY CIRCLE

CONTRACT NO. 069950373

STORMWATER PUMP STATION	
DEWBERRY ENGINEERS INC. COA#24GA28047600	PARSONS BRINCKERHOFF, INC.
200 BROADACRES DRIVE, BLOOMFIELD NJ 07003	CERTIFICATION OF AUTHORIZATION NO. 24GA28029800
SHAHIDUL H. JOARDER	MICHAEL D. HELMLINGER
N.J. PROFESSIONAL ENGINEER NO. 24GE04861900	N.J. PROFESSIONAL ENGINEER NO. 24GE03812100

151

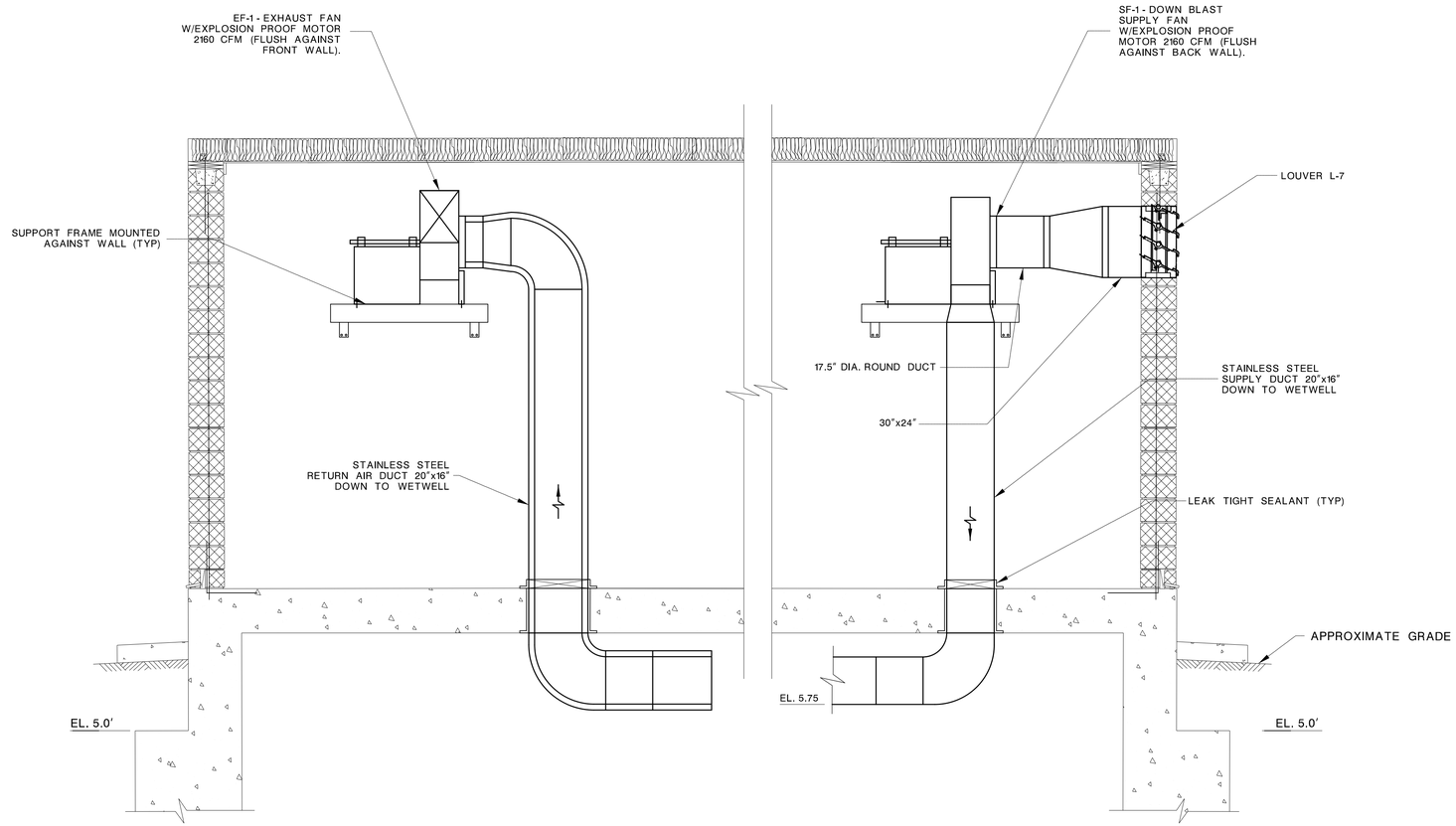

MECHANICAL DUCTWORK SECTION VIEW

SECTION 1-1

SCALE: ½"=1'-0"

M-4 MECHANICAL - HVAC SECTION

DTL-26 / DTL-44

NEW JERSEY DEPARTMENT OF TRANSPORTATION

CONSTRUCTION DETAILS

ROUTE U.S. 46 LITTLE FERRY CIRCLE

CONTRACT NO. 069950373

STORMWATER PUMP STATION	
DEWBERRY ENGINEERS INC. COA#24GA28047600	PARSONS BRINCKERHOFF, INC.
200 BROADACRES DRIVE, BLOOMFIELD NJ 07003	CERTIFICATION OF AUTHORIZATION NO. 24GA28029800
SHAHIDUL H. JOARDER	MICHAEL D. HELMLINGER
N.J. PROFESSIONAL ENGINEER NO. 24GE04861900	N.J. PROFESSIONAL ENGINEER NO. 24GE03812100

152

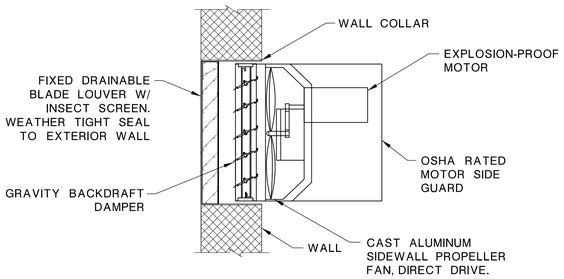

WALL MOUNTED EXHAUST FAN

SCALE: NONE

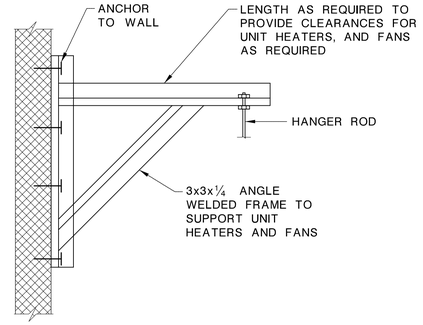

NOTE:
FABRICATE STUCTURAL SUPPORT FOR UNIT HEATER AND FANS PER MANUFACTURER'S REQUIREMENTS.

SUPPORT FRAME FOR UNIT HEATERS AND FANS

SCALE: NONE

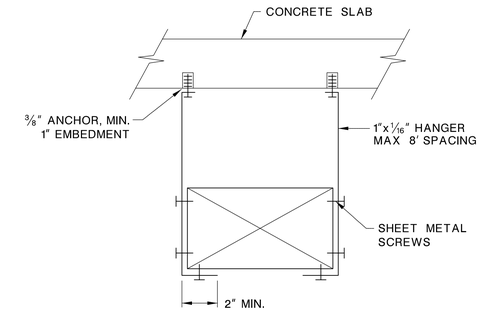

DUCT SUPPORT DETAIL

SCALE: NONE

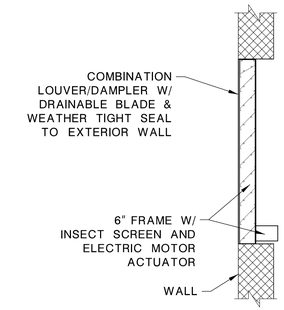

INTAKE LOUVER/DAMPER ASSEMBLY

SCALE: NONE

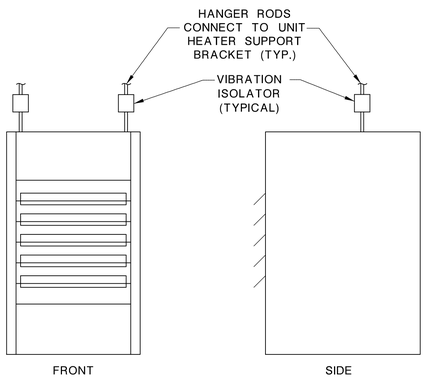

ELECTRIC UNIT HEATER

SCALE: NONE

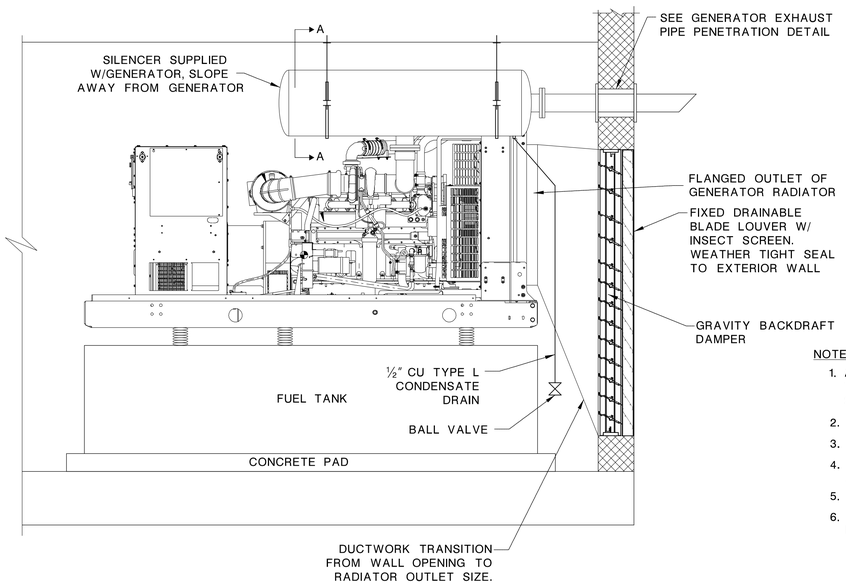

GENERATOR DETAIL

SCALE: NONE

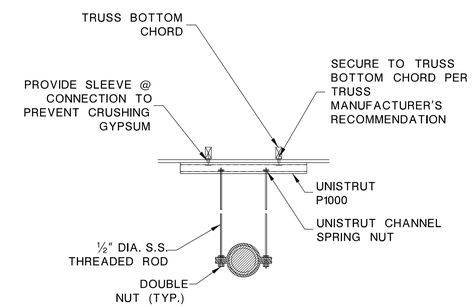

SECTION A-A

N.T.S.

NOTES:

1. ALL EXHAUST PIPING INCLUDING SILENCER SHALL BE INSULATED WITH HI TEMP CALCIUM SILICATE COVERED WITH 16 GAUGE SHEET METAL JACKET. 2" EXPOSED MIN.
2. ALL PIPING TO BE PITCHED AWAY FROM GENERATOR TO DRAIN CONDESATE.
3. INSTALL FLEX AND REDUCER AS CLOSE TO GENERATOR AS POSSIBLE.
4. STAINLESS STEEL SUPPORTS FOR EXHAUST SYSTEM SHALL BE PROVIDED AS PER MANUFACTURER'S RECOMMENDATIONS.
5. GENERATOR EXHAUST PIPE SIZE SHALL BE PER MANUFACTURERS RECOMMENDATION.
6. ROOF SYSTEM SHALL BE DESIGNED AND REINFORCED TO SUPPORT GENERATOR EXHAUST SYSTEM.

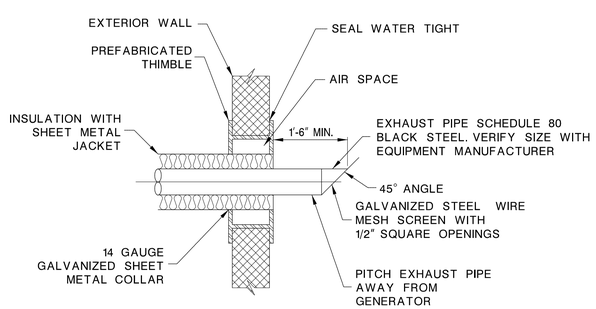

GENERATOR EXHAUST PIPE PENETRATION

N.T.S.

M-5 MECHANICAL - DETAILS AND NOTES

DTL-27 / DTL-44

NEW JERSEY DEPARTMENT OF TRANSPORTATION

CONSTRUCTION DETAILS

ROUTE U.S. 46 LITTLE FERRY CIRCLE

CONTRACT NO. 069950373

STORMWATER PUMP STATION	
DEWBERRY ENGINEERS INC. COA#24GA28047600	PARSONS BRINCKERHOFF, INC.
200 BROADACRES DRIVE, BLOOMFIELD NJ 07003	CERTIFICATION OF AUTHORIZATION NO. 24GA28029800
SHAHIDUL H. JOARDER	MICHAEL D. HELMLINGER
N.J. PROFESSIONAL ENGINEER NO. 24GE04861900	N.J. PROFESSIONAL ENGINEER NO. 24GE03812100

153

SPECIFICATIONS

I. CODES AND STANDARDS

A. ALL WORK SHALL CONFORM TO THE REQUIREMENTS OF THE "INTERNATIONAL BUILDING CODE-NEW JERSEY EDITION", AND WITH THE NJDOT STANDARD SPECIFICATIONS FOR ROAD AND BRIDGE CONSTRUCTION AS MODIFIED BY SUPPLEMENTARY SPECIFICATIONS.

B. WHERE MORE STRINGENT, THE LATEST EDITION OF THE FOLLOWING CODES SHALL APPLY TO WORK:

1. "BUILDING CODE REQUIREMENTS FOR STRUCTURAL CONCRETE", ACI 318.
2. "STANDARD PRACTICE FOR SELECTING PROPORTIONS FOR NORMAL, HEAVYWEIGHT AND MASS CONCRETE", ACI 211.1.
3. "RECOMMENDED PRACTICE FOR EVALUATION OF STRENGTH TEST RESULTS OF CONCRETE", ACI 214.
4. "SPECIFICATIONS FOR STRUCTURAL CONCRETE FOR BUILDING", ACI 301.
5. "RECOMMENDED PRACTICE FOR MEASURING, MIXING, TRANSPORTING AND PLACING CONCRETE", ACI 304.
6. "PLACING CONCRETE BY PUMPING METHODS", ACI 304.2R.
7. "HOT WEATHER CONCRETING", ACI 305R.
8. "COLD WEATHER CONCRETING", ACI 306R.
9. "STANDARD PRACTICE FOR CURING CONCRETE", ACI 308.
10. "STANDARD PRACTICE FOR CONSOLIDATION OF CONCRETE", ACI 309.
11. "ENVIRONMENTAL ENGINEERING CONCRETE STRUCTURES", ACI 350R.
12. "BUILDING CODE REQUIREMENTS FOR CONCRETE MASONRY STRUCTURES", ACI 530.

C. REFERENCE DOCUMENTS:

1. "ACI DETAILING MANUAL - 1988", SP-66 (INCLUDES ACI 315-80 AND ACI 315R-80).
2. "MANUAL OF STANDARD PRACTICE", CONCRETE REINFORCING STEEL INSTITUTE.
3. "STANDARD TOLERANCES FOR CONCRETE CONSTRUCTION AND MATERIALS", ACI 117.
4. "RECOMMENDED PRACTICE FOR CONCRETE FORMWORK", ACI 347 WITH THE SPECIFIC DELETION OF REFERENCE TO TOLERANCES WHERE IN CONFLICT WITH THIS SPECIFICATION. TOLERANCES GIVEN IN ACI 117 SHALL APPLY TO THE WORK.
5. "NATIONAL DESIGN SPECIFICATION FOR WOOD CONSTRUCTION", NATIONAL FOREST PRODUCTS ASSOCIATION.
6. NJDOT STANDARD SPECIFICATIONS FOR ROAD AND BRIDGE CONSTRUCTION, 2007.

II. GENERAL

A. THIS PROJECT HAS BEEN DESIGNED FOR THE WEIGHTS OF MATERIALS INDICATED IN THE DESIGN DATA. IT IS THE CONTRACTOR'S RESPONSIBILITY TO DETERMINE ALLOWABLE CONSTRUCTION LOADS AND TO PROVIDE PROPER DESIGN AND CONSTRUCTION OF FALSEWORK, FORMWORK, STAGING, BRACING, SHEETING, SHORING, ETC.

B. PRIOR TO CONSTRUCTION, CONTRACTOR SHALL VERIFY STRUCTURAL ELEVATIONS AND DIMENSIONS WITH EXISTING CONDITIONS AND WITH OTHER DRAWINGS; COORDINATE LOCATION OF SLEEVES AND OPENINGS THROUGH THE STRUCTURE, SLAB DEPRESSIONS, FLOOR DRAINS, INSERTS, AND OTHER RELATED ITEMS.

C. CONTRACTOR SHALL BE SOLELY RESPONSIBLE FOR THE CORRECTNESS OF DIMENSIONS OR QUANTITIES AND FOR THE FITTING TO OTHER WORK; FOR WORK TO BE CONFIRMED AND CORRELATED AT THE SITE; FOR INFORMATION PERTAINING TO THE FABRICATION PROCEDURE OR TO THE MEANS, METHODS, TECHNIQUES, SEQUENCES AND PROCEDURES OF CONSTRUCTION; AND FOR THE COORDINATION OF STRUCTURAL WORK WITH THE WORK OF ALL OTHER TRADES. THE VERIFICATION OF THE PHYSICAL INTERRELATIONSHIPS OF ELEMENTS OF THE WORK FROM PLANS AND SPECIFICATIONS AND IN THE FIELD IS THE CONTRACTOR'S SOLE RESPONSIBILITY. REVIEW OF CONTRACTOR'S SUBMISSIONS DOES NOT RELIEVE CONTRACTOR FROM THESE RESPONSIBILITIES.

D. SEE PROCESS, ARCHITECTURAL AND MECHANICAL DRAWINGS FOR DETAILS AND LOCATION OF OPENINGS OR RECESSES IN WALLS AND SLABS AND OTHER DIMENSIONS NOT SHOWN IN STRUCTURAL DRAWINGS.

SEE PROCESS, MECHANICAL AND ELECTRICAL DRAWINGS FOR INFORMATION REGARDING SIZE AND LOCATION OF OPENINGS FOR DUCTS, PIPES, CONDUITS, MACHINE PADS, AND THE LIKE.

PROPOSED OPENINGS OR RECESSES IN THE STRUCTURE WHICH ARE NOT SHOWN IN THE STRUCTURAL DRAWINGS, EITHER DIRECTLY OR BY TYPICAL DETAIL, SHALL BE SUBMITTED FOR ACCEPTANCE.

E. ALL CONCRETE MASONRY UNITS CONTAINING MASONRY ANCHORS, DOWELS, REINFORCING STEEL AND THE LIKE SHALL BE FILLED SOLID WITH GROUT.

III. REINFORCED CONCRETE

A. UNLESS OTHERWISE NOTED:

1. ALL REINFORCING STEEL SHALL BE DEFORMED BARS CONFORMING TO ASTM A615, GRADE 60. SIZES INDICATED ARE STANDARD BAR DESIGNATION NUMBERS (NOT METRIC).
2. WELDED WIRE FABRIC SHALL CONFORM TO ASTM A185.

B. PROVIDE CONCRETE WITH THE FOLLOWING PROPERTIES IN THE LOCATIONS INDICATED:

f'c	COARSE AGGREGATE	LOCATIONS
5,000 PSI	NORMAL WEIGHT (SUPER PLASTICIZED)	ALL CONCRETE

C. WATER REDUCING ADMIXTURE SHALL BE INCORPORATED INTO ALL CONCRETE AT A MINIMUM DOSAGE AS RECOMMENDED BY THE MANUFACTURER.

D. SPLICING OF REINFORCEMENT IS PERMITTED ONLY AT LOCATIONS SHOWN IN THE CONTRACT DRAWINGS OR AS ACCEPTED BY THE ENGINEER. UNLESS OTHERWISE SHOWN OR NOTED REINFORCING STEEL SHALL BE SPLICED TO DEVELOP ITS FULL TENSILE CAPACITY IN ACCORDANCE WITH ACI 318.

E. REINFORCING BAR DEVELOPMENT LENGTHS SHALL BE IN ACCORDANCE WITH ACI 318 UNLESS NOTED OTHERWISE.

F. DETAILING OF REINFORCING STEEL SHALL CONFORM TO "ACI MANUAL OF STANDARD PRACTICE FOR DETAILING REINFORCED CONCRETE STRUCTURES" (ACI 315).

G. MINIMUM CONCRETE COVER FOR REINFORCEMENT (SUBJECT TO TOLERANCES PERMITTED BY CODE) SHALL BE AS GIVEN IN PARAGRAPH 7.7.1 OF ACI 318, UNLESS OTHERWISE INDICATED.

H. ALL WALL CONSTRUCTION SHALL BE CAST MONOLITHICALLY WITHOUT HORIZONTAL CONSTRUCTION JOINTS, UNLESS SHOWN IN THE CONTRACT DRAWINGS.

I. LOCATION OF ALL CONSTRUCTION JOINTS ARE SUBJECT TO THE REQUIREMENTS OF THE CONTRACT DOCUMENTS, CONFORMANCE WITH ACI 318, AND ACCEPTANCE OF THE ENGINEER.

J. WATERSTOPS: EXTRUDED, VIRGIN POLYVINYL CHLORIDE RESINS CONFORMING TO U.S. CORPS OF ENGINEERS SPECIFICATION CRD-C 572. PROVIDE A TENSILE STRENGTH OF 2,250 PSI, AN ULTIMATE ELONGATION OF NOT LESS THAN 400 PERCENT, AND A SHORE HARDNESS OF 76 + 3, ALL AS PROVIDED BY CRD-C572.

1. FOR CONSTRUCTION JOINTS: 6" WIDE, FLAT RIBBED, ⅜" THICK, ACCEPTED MANUFACTURERS:
   a. A.C. HORN INC.
   b. VINYLEX CORP.
   c. OTHER ACCEPTED BY ENGINEER.
2. WATERSTOP MANUFACTURER SHALL HAVE A FIELD REPRESENTATIVE AVAILABLE TO VISIT THE SITE AND INSTRUCT CONTRACTOR'S FORCES IN THE PROPER METHODS OF SPLICING AND INSTALLING HIS MATERIAL.

K. SPLICING OF PVC WATERSTOPS: SPLICE WATERSTOPS TO FORM A CONTINUOUS WATERTIGHT SEAL. AT JUNCTIONS, USE SPECIAL SHOP FABRICATED ELLS, TEES, AND CROSSES. THERMOSTATICALLY CONTROLLED ELECTRIC SPLICERS SHALL BE USED FOR ALL FIELD SPLICES, FOLLOWING PROCEDURES IN STRICT ACCORDANCE WITH MANUFACTURER'S PRINTED INSTRUCTIONS. TEST ALL FIELD SPLICES FOR WATER TIGHTNESS WITH SPARK TESTER IN ACCORDANCE WITH MANUFACTURER'S PRINTED INSTRUCTIONS. EXTEND WATERSTOPS AT LEAST 6 INCHES BEYOND END OF CONCRETE PLACEMENT IN ORDER TO PROVIDE SPLICE LENGTH FOR SUBSEQUENT PLACEMENT. TAKE CARE THAT BOTH SIDES OF WATERSTOP ARE PROPERLY ALIGNED AND EMBEDDED IN CONCRETE AND HELD FIRMLY IN PLACE DURING CONCRETE PLACEMENT. INSTALL IN STRICT ACCORDANCE WITH MANUFACTURER'S INSTRUCTIONS. SECURELY FASTEN WATERSTOPS TO ADJACENT REINFORCING STEEL WITH SUITABLE WIRE AND HOG RINGS 12 INCHES ON CENTER MINIMUM. DO NOT PUNCTURE WATERSTOP EXCEPT BETWEEN THE LAST RIB AND THE END.

L. NON-SHRINK GROUT SHALL BE PREMIXED AND BAGGED BY MANUFACTURER. ACCEPTABLE NON-SHRINK GROUT: MASTERFLOW 713 BY MASTER BUILDERS OR OTHER ACCEPTED BY ENGINEER.

M. FORM TIES FOR LIQUID RETAINING CONCRETE: PROVIDE WATER RESISTANT TYPE FORM TIES WITH SWAGED METAL WASHERS AS MANUFACTURED BY RICHMOND.

IV. FOUNDATIONS

A. FOUNDATION SHALL BE PILE SUPPORTED. REFER TO FOUNDATION DRAWINGS FOR ADDITIONAL INFORMATION.

B. DEWATERING SHALL BE PROVIDED AS REQUIRED SO THAT EXCAVATION, CONCRETE WORK AND BACKFILLING ARE PERFORMED IN THE DRY.

C. TEMPORARY BRACING, SHEETING AND SHORING, ETC. SHALL BE THE SOLE RESPONSIBILITY OF THE CONTRACTOR, AND SHALL BE DESIGNED, FABRICATED AND INSTALLED IN ACCORDANCE WITH ACCEPTED DRAWINGS PREPARED AND SEALED BY A PROFESSIONAL ENGINEER REGISTERED IN THE STATE OF NEW JERSEY.

V. MISCELLANEOUS MATERIAL

A. DRILLED-IN ANCHORS INTO WORK SHALL BE EXPANSION TYPE UNLESS NOTED OTHERWISE. ACCEPTABLE ANCHORS: KWIK BOLT 3 BY HILTI FASTENING SYSTEMS, TULSA, OKLAHOMA; RED HEAD WEDGE ANCHORS BY ITT PHILLIPS DRILL DIVISION, OR OTHER ACCEPTED BY ENGINEER.

VI. METAL PLATED CONNECTED WOOD TRUSSES

A. METAL PLATE CONNECTED WOOD TRUSSES SHALL BE PREFABRICATED TO THE EXTENT AND CONFIGUARTION AS INDICATED ON THE CONTRACT DRAWINGS. THE STRUCTURAL ADEQUACY OF THE TRUSSES SHALL BE THE RESPONSIBILITY OF THE CONTRACTOR AND THE NEW JERSEY STATE LICENSED PROFESSIONAL ENGINEER, EMPLOYED BY THE CONTRACTOR RESPONSIBLE FOR THE WORK, AND SHALL CONFORM TO THE PERFORMANCE REQUIREMENTS OF THE CONTRACT DOCUMENTS.

VII. SUBMITTALS

A. GENERAL: SUBMIT SAMPLES, SHOP DRAWINGS, PRODUCT DATA, TEST REPORTS AND DATA, MANUFACTURER'S NAMES, CERTIFICATIONS AND PROCEDURES FOR ALL SPECIFIED ITEMS AND AS REQUESTED. SHOP DRAWINGS SHALL CONFORM TO THE BEST STANDARDS OF THE CONSTRUCTION INDUSTRY, AND SHALL BE PREPARED BY AND UNDER THE SUPERVISION OF COMPETENT ENGINEERING PERSONNEL.

B. REINFORCED CONCRETE:

1. SUBMIT REINFORCING STEEL SHOP DRAWINGS INCLUDING APPLICABLE BARS LISTS AND BENDING SCHEDULES. INDICATE ALL LAP LENGTHS AND LOCATIONS AND CLEAR COVER ON REINFORCING STEEL IN THE PLACING PLANS.
2. SUBMIT CERTIFIED MILL TEST REPORTS FOR CEMENT AND STEEL REINFORCING UPON REQUEST.
3. SUBMIT CONCRETE MIX DESIGN.
4. SUBMIT CATALOG CUTS FOR TIES, WATERSTOPS, AND EXPANSION ANCHORS.

C. PLATE CONNECTED WOOD TRUSSES.

1. REFER TO SPECIFICATION SECTION 061753 FOR SUBMITTAL REQUIREMENTS.

VIII. SPECIAL INSPECTION

A. PROVIDE SPECIAL INSPECTION FOR INSTALLATION OF:

1. PILING.
2. CAST-IN-PLACE CONCRETE.
3. REINFORCING STEEL.
4. MASONRY

B. ALL SPECIAL INSPECTION SHALL BE DONE UNDER THE SUPERVISION OF A PROFESSIONAL ENGINEER LICENSED IN THE STATE OF NEW JERSEY. REPORTS SHALL BE SUBMITTED TO THE OWNER AND ENGINEER FOR REVIEW.

DESIGN LOAD CRITERIA

FLOOR LIVE LOAD = 150 PSF PLUS GENERATOR (SEE PLAN BELOW)

SNOW LOADS:

Pg = 30 PSF
Pf = 25 PSF (30 PSF IS USED)
Cc = 0.9
I = 1.2
Ct = 1.1

WIND LOADS:

WIND SPEED = 100 MPH
I = 1.15
EXPOSURE = B
GCpi = ±0.18

LOADS FOR PLATE CONNECTED WOOD TRUSSES

1. SUPERIMPOSED DEAD LOAD: 25 PSF (15 PSF ON BOTTOM CHORD AND 10 PSF ON TOP CHORD)
2. MECHANICAL EQUIPMENT - 500 LBS (MAX.)
3. ROOF LIVE LOADS = 30 PSF
3. CEILING LIVE LOADS = 20 PSF
3. WIND LOAD IN ACCORDANCE WITH ASCE 7-05

S-1 STRUCTURAL - NOTES AND LOAD CRITERIA

DTL-28 / DTL-44

NEW JERSEY DEPARTMENT OF TRANSPORTATION

CONSTRUCTION DETAILS

ROUTE U.S. 46 LITTLE FERRY CIRCLE

CONTRACT NO. 069950373

STORMWATER PUMP STATION	
DEWBERRY ENGINEERS INC. COA#24GA28047600	PARSONS BRINCKERHOFF, INC.
200 BROADACRES DRIVE, BLOOMFIELD NJ 07003	CERTIFICATION OF AUTHORIZATION NO. 24GA28029800
KEITH ITZLER	MICHAEL D. HELMLINGER
N.J. PROFESSIONAL ENGINEER NO. 24GE03636100	N.J. PROFESSIONAL ENGINEER NO. 24GE03812100

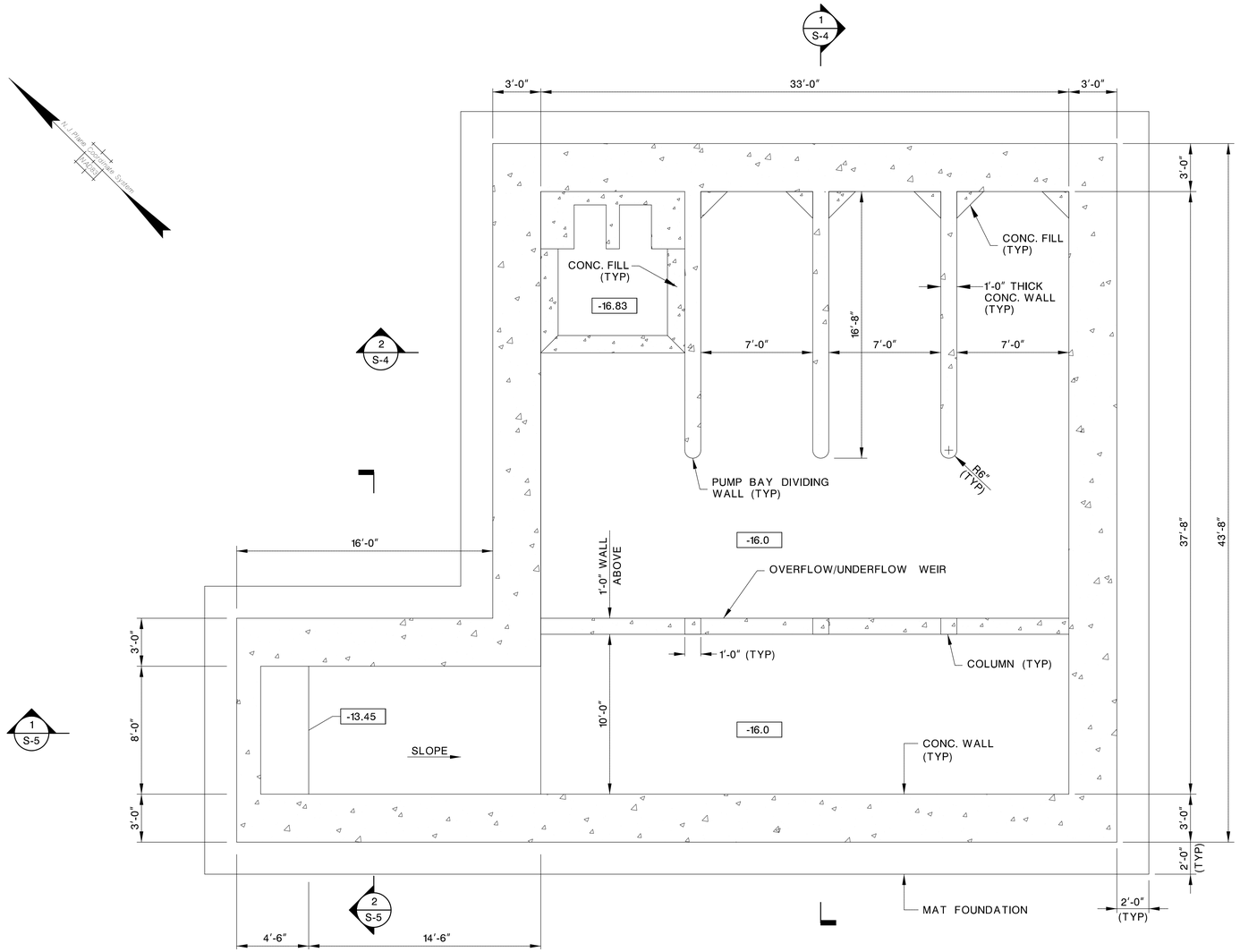

1 WET WELL LOWER PLAN

SCALE: 1/4"=1'-0"

GRAPHIC SCALE

-2 0 1 2 4 8

(IN FEET)
1/4 inch = 1 ft.

PLAN NOTES:

1. FOR GENERAL NOTES, SEE DWG. S-1.
2. FOR TYPICAL DETAILS, SEE DWG. S-6.
3. COORDINATE LOCATION OF WALL AND SLAB OPENINGS WITH PD-SERIES, A-SERIES AND M-SERIES DWGS.
4. TOP OF SLAB ELEVATION IS NOTED THUS: [ ]

S-2 STRUCTURAL - LOWER PLAN

DTL-29 / DTL-44

NEW JERSEY DEPARTMENT OF TRANSPORTATION

CONSTRUCTION DETAILS

ROUTE U.S. 46 LITTLE FERRY CIRCLE

CONTRACT NO. 069950373

STORMWATER PUMP STATION	
DEWBERRY ENGINEERS INC. COA#24GA28047600	PARSONS BRINCKERHOFF, INC.
200 BROADACRES DRIVE, BLOOMFIELD NJ 07003	CERTIFICATION OF AUTHORIZATION NO. 24GA28029800
KEITH ITZLER	MICHAEL D. HELMLINGER
N.J. PROFESSIONAL ENGINEER NO. 24GE03636100	N.J. PROFESSIONAL ENGINEER NO. 24GE03812100

155

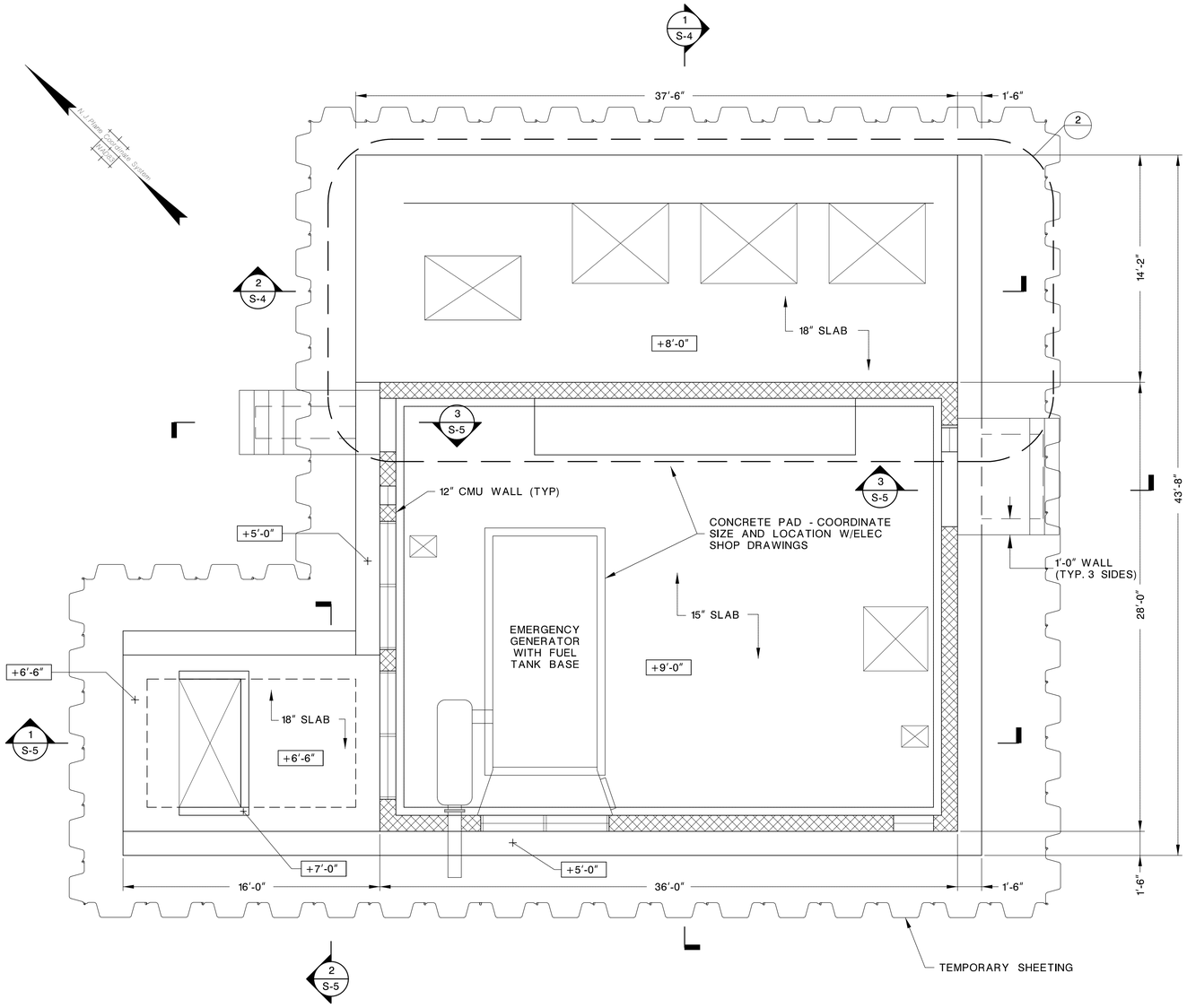

1 TOP PLAN
SCALE: 1/4"=1'-0"

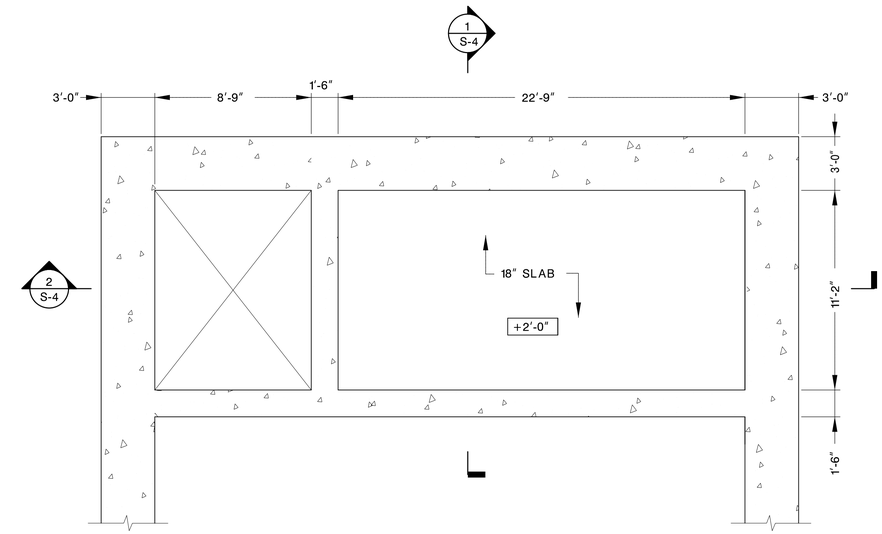

2 PLAN BENEATH PUMP BAY
SCALE: 1/4"=1'-0"

GRAPHIC SCALE
-2 0 1 2 4 8
(IN FEET)
1/4 inch = 1 ft.

PLAN NOTES:

1. FOR GENERAL NOTES, SEE DWG. S-1.
2. FOR TYPICAL DETAILS, SEE DWG. S-6.
3. COORDINATE LOCATION OF WALL AND SLAB OPENINGS WITH PD-SERIES, A-SERIES AND M-SERIES DWGS.
4. TOP OF SLAB ELEVATION IS NOTED THUS: [ ]

S-3 STRUCTURAL - TOP PLANS

DTL-30 / DTL-44

NEW JERSEY DEPARTMENT OF TRANSPORTATION

CONSTRUCTION DETAILS

ROUTE U.S. 46 LITTLE FERRY CIRCLE

CONTRACT NO. 069950373

STORMWATER PUMP STATION	
DEWBERRY ENGINEERS INC. COA#24GA28047600	PARSONS BRINCKERHOFF, INC.
200 BROADACRES DRIVE, BLOOMFIELD NJ 07003	CERTIFICATION OF AUTHORIZATION NO. 24GA28029800
KEITH ITZLER	MICHAEL D. HELMLINGER
N.J. PROFESSIONAL ENGINEER NO. 24GE03636100	N.J. PROFESSIONAL ENGINEER NO. 24GE03812100

radiwinarso 3/6/2013 4:42:42 PM pdf.pltcfg $$$$$$$$MODEL$$$$$$$ 30-Scale 50006425-Little-Ferry-PS Q:\50006425\CAD\Civil\FD Revised 02.12.13\S-3.dgn

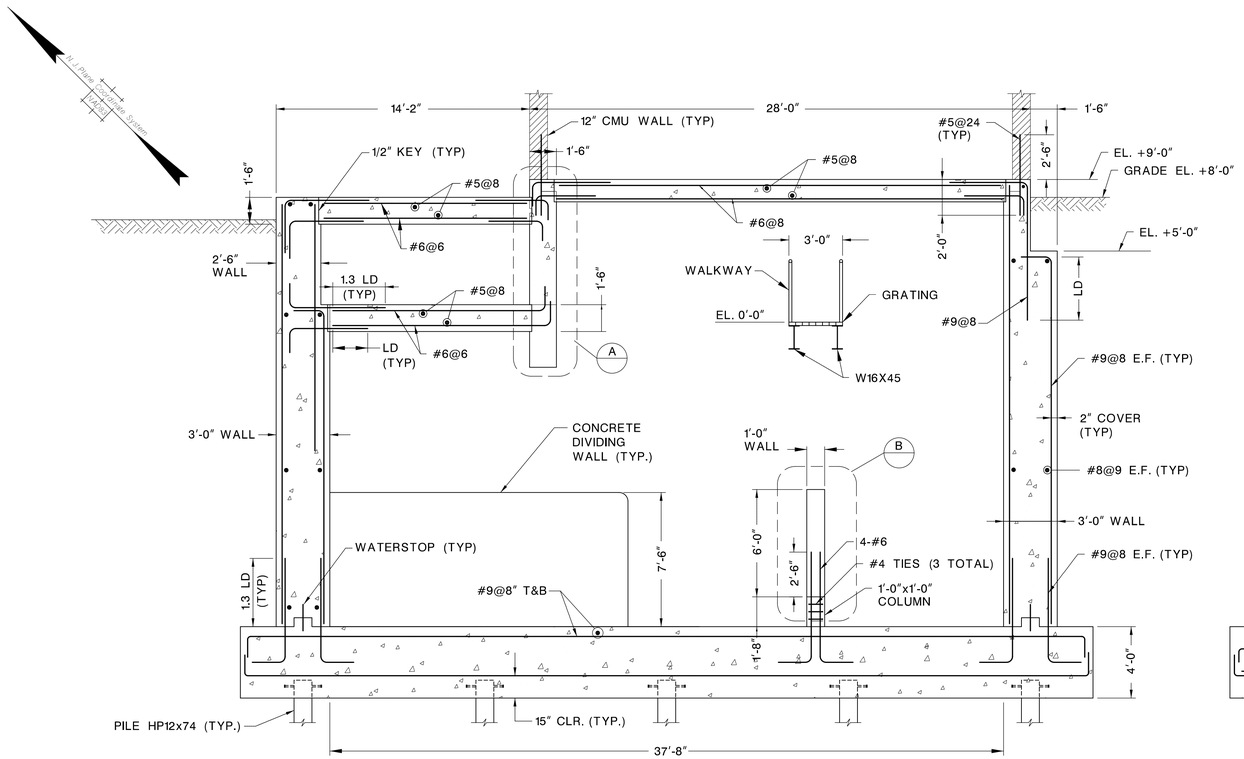

1 SECTION
SCALE: 1/4"=1'-0"

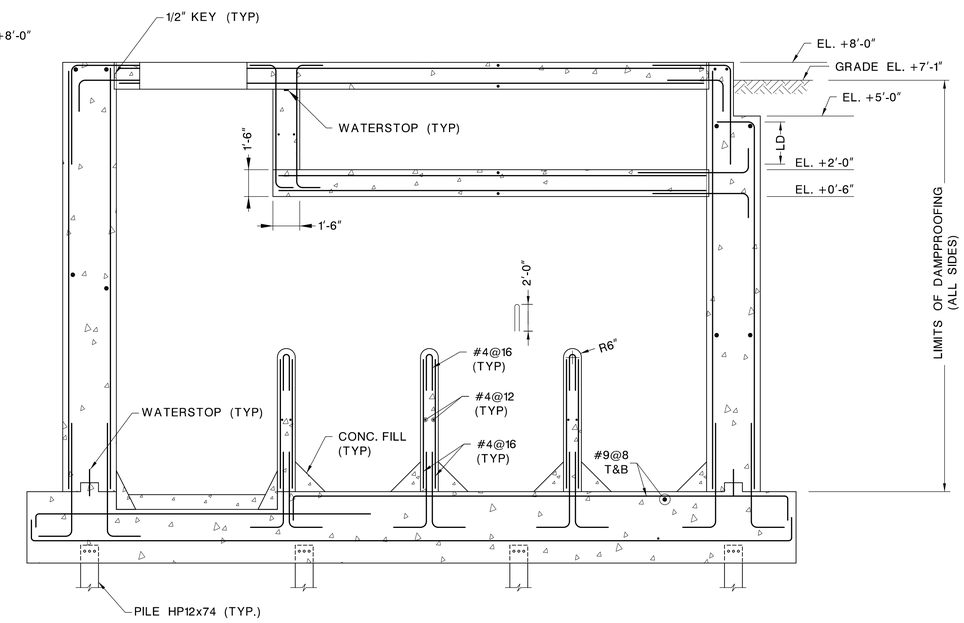

2 SECTION
SCALE: 1/4"=1'-0"

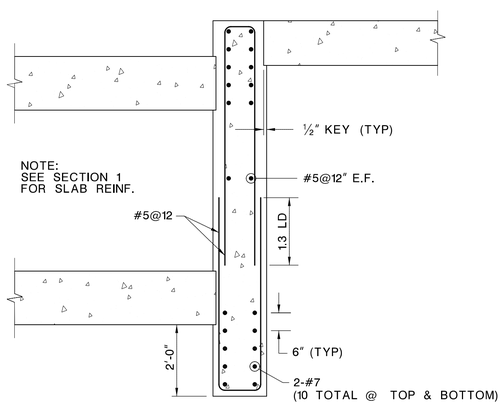

A DETAIL
SCALE: 1/2"=1'-0"

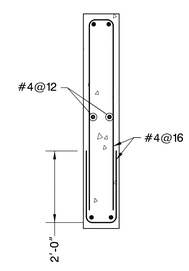

B DETAIL
SCALE: 1/2"=1'-0"

GRAPHIC SCALE
-2 0 1 2 4 8
(IN FEET)
1/4 inch = 1 ft.

S-4 STRUCTURAL - SECTIONS - 1

DTL-31 / DTL-44

NEW JERSEY DEPARTMENT OF TRANSPORTATION

CONSTRUCTION DETAILS

ROUTE U.S. 46 LITTLE FERRY CIRCLE

CONTRACT NO. 069950373

STORMWATER PUMP STATION	
DEWBERRY ENGINEERS INC. COA#24GA28047600	PARSONS BRINCKERHOFF, INC.
200 BROADACRES DRIVE, BLOOMFIELD NJ 07003	CERTIFICATION OF AUTHORIZATION NO. 24GA28029800
KEITH ITZLER	MICHAEL D. HELMLINGER
N.J. PROFESSIONAL ENGINEER NO. 24GE03636100	N.J. PROFESSIONAL ENGINEER NO. 24GE03812100

157

STATE	FEDERAL PROJECT NO.
N.J.	STP-8112(128)

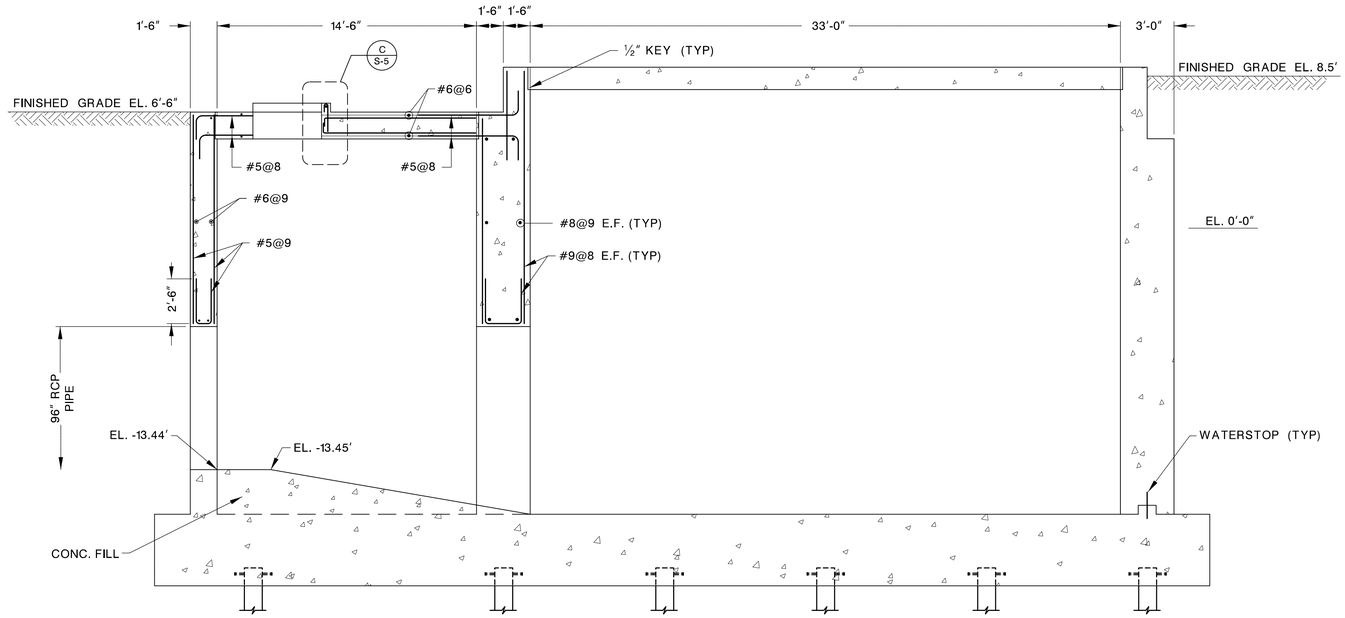

NOTE: REFER TO 1/S-4 FOR WALL AND SLAB REINF. NOT SHOWN.

1 SECTION
SCALE: 1/4"=1'-0"

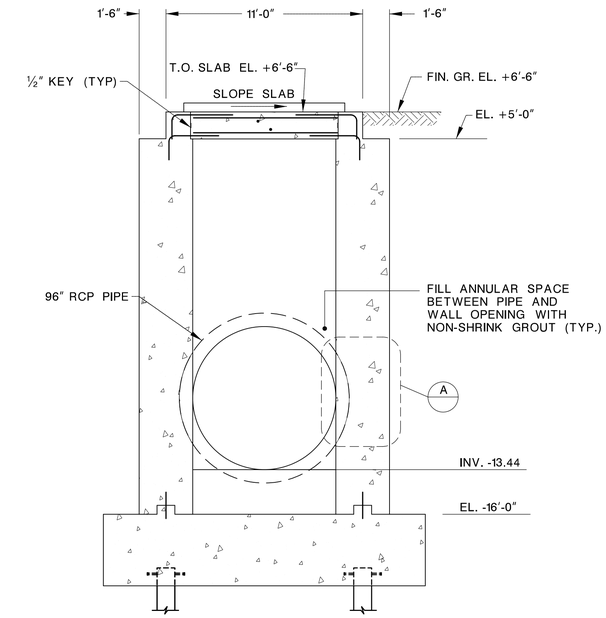

NOTE: REFER TO 1/S-4 FOR WALL REINF. NOT SHOWN.

2 SECTION
SCALE: 1/4"=1'-0"

GRAPHIC SCALE
-2 0 1 2 4 8
(IN FEET)
1/4 inch = 1 ft.

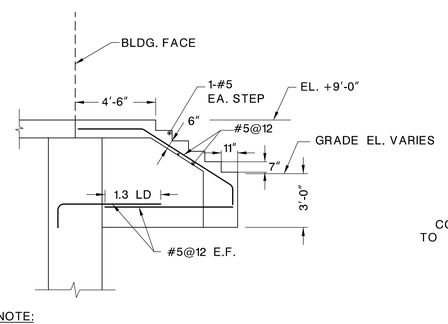

NOTE:

REFER TO SITE PLAN AND ARCHITECTURAL ELEVATIONS FOR GRADE ELEVATIONS.

3 SECTION
SCALE: 1/4"=1'-0"

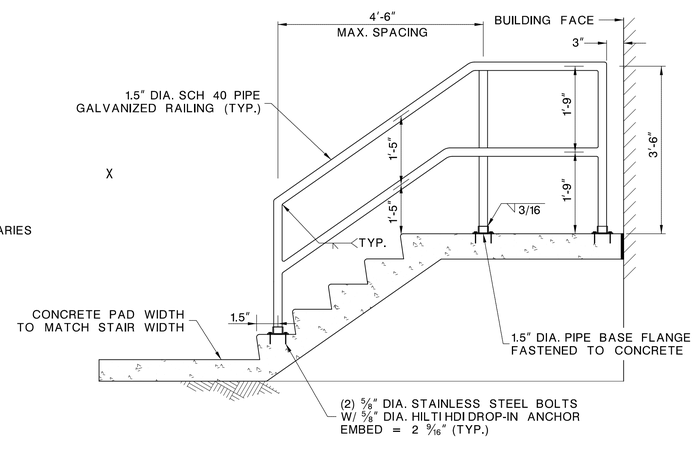

HANDRAIL DETAIL

1. SEE SECTION 3 DETAIL THIS SHEET FOR CONCRETE STAIR DETAIL.
2. CONCRETE PAD LENGTH AT BASE OF STAIRS MINIMUM 4'. REFER TO SITE PLAN FOR SPECIFIC DIMENSIONS.
3. REFER TO SITE PLAN FOR STAIR QUANTITY.

B DETAIL
N.T.S.

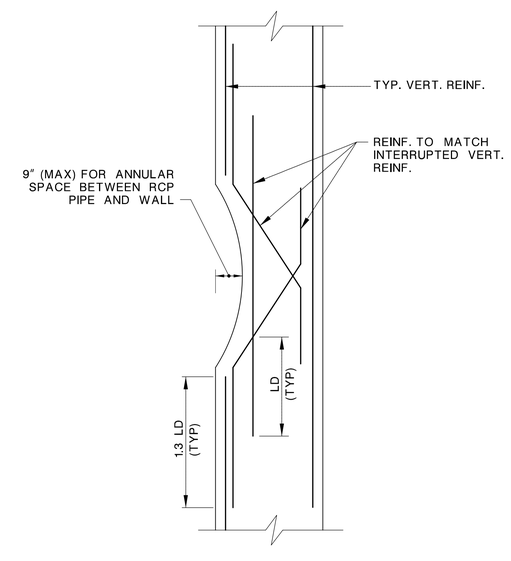

A DETAIL
N.T.S.

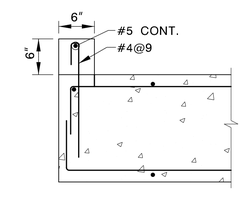

C DETAIL
N.T.S.

S-5 STRUCTURAL - SECTIONS - 2

DTL-32 / DTL-44

NEW JERSEY DEPARTMENT OF TRANSPORTATION

CONSTRUCTION DETAILS

ROUTE U.S. 46 LITTLE FERRY CIRCLE

CONTRACT NO. 069950373

STORMWATER PUMP STATION	
DEWBERRY ENGINEERS INC. COA#24GA28047600	PARSONS BRINCKERHOFF, INC.
200 BROADACRES DRIVE, BLOOMFIELD NJ 07003	CERTIFICATION OF AUTHORIZATION NO. 24GA28029800
KEITH ITZLER	MICHAEL D. HELMLINGER
N.J. PROFESSIONAL ENGINEER NO. 24GE03636100	N.J. PROFESSIONAL ENGINEER NO. 24GE03812100

158

MINIMUM WALL REINFORCEMENT SCHEDULE			
UNLESS OTHERWISE NOTED OR SHOWN, ALL WALLS ARE TO BE REINFORCED (AS A MINIMUM) ACCORDING TO THIS TABLE			
WALL THICKNESS	HORIZONTAL REINF.	VERTICAL REINF.	LOCATION
6″ AND UNDER	#3 @ 9	#4 @ 12	WALL CENTER
OVER 6″-8″	#4 @ 12	#4 @ 12	WALL CENTER
OVER 8″-10″	#4 @ 10	#4 @ 12	WALL CENTER
OVER 10″-12″	#4 @ 16	#4 @ 18	EACH FACE
OVER 12″-16″	#4 @ 12	#4 @ 16	EACH FACE
OVER 16″-18″	#5 @ 16	#5 @ 18	EACH FACE
OVER 18″-24″	#5 @ 12	#5 @ 16	EACH FACE
OVER 24″-28″	#6 @ 12	#5 @ 14	EACH FACE
OVER 28″-32″	#6 @ 10	#6 @ 16	EACH FACE
OVER 32″-36″	#6 @ 9	#6 @ 14	EACH FACE

NOTES:

1. VERTICAL REINFORCING SHALL BE CONTINUOUS FROM STRUCTURAL LEVEL TO STRUCTURAL LEVEL, UNLESS OTHERWISE NOTED.

2. HORIZONTAL REINFORCING SPACING SHALL START AND END WITH NOT MORE THAN 1/2 SCHEDULED SPACING.

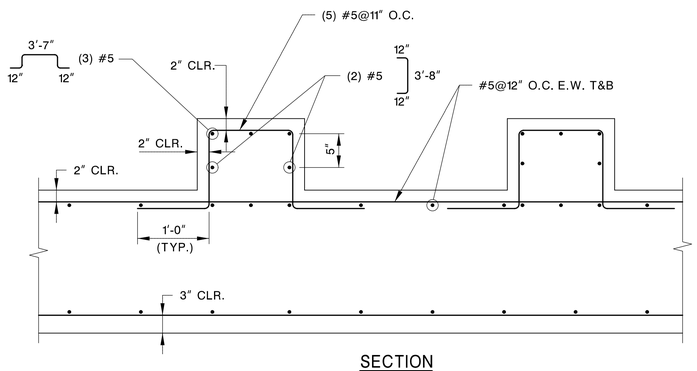

SECTION

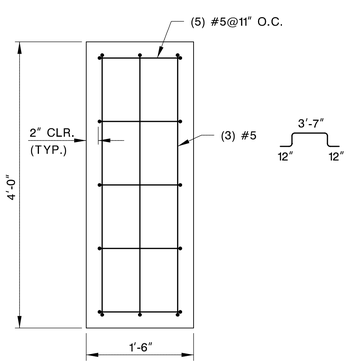

TYPICAL BLOCK PLAN

ENERGY DISSIPATING SLAB REINFORCEMENT DETAIL

NTS

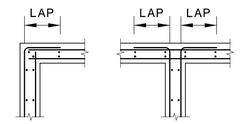

WALL INTERSECTIONS

LAP = 1.3LD

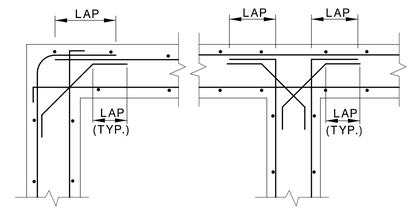

TYPICAL DETAIL
WET WELL WALL

NTS

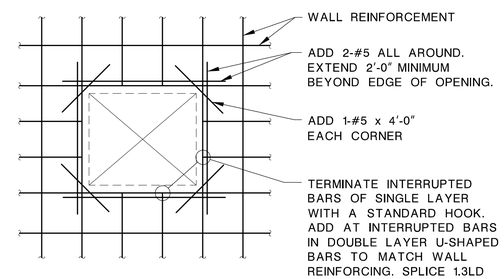

TYPICAL WALL OPENING REINFORCEMENT

(CIRCULAR OPENING SIMILAR)

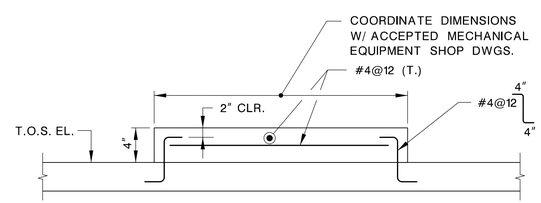

TYPICAL DETAIL EQUIPMENT PAD

NTS

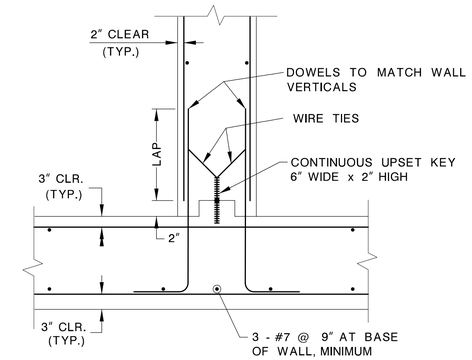

TYPICAL DETAIL AT
WATERSTOPS

NTS

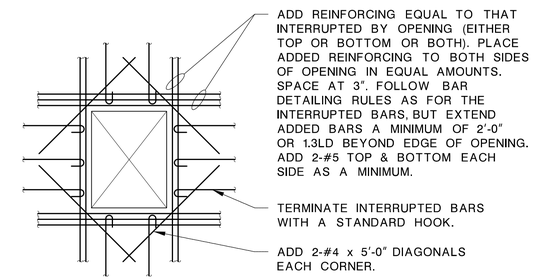

NOTE:

WHERE OPENING DIMENSION IS 1′-0″ OR LESS, REINFORCING BARS MAY BE SHIFTED TO CLEAR OPENING SO THAT SLAB REINFORCING IS NOT INTERRUPTED. FOR SUCH A CASE THE ADDED BARS CAN BE REDUCED TO 1-#5 TOP AND BOTTOM EACH SIDE.

TYPICAL REINFORCEMENT AT SLAB OPENING DETAIL

(CIRCULAR OPENING SIMILAR)

S-6 STRUCTURAL - REINFORCEMENT DETAILS

DTL-33 / DTL-44

NEW JERSEY DEPARTMENT OF TRANSPORTATION

CONSTRUCTION DETAILS

ROUTE U.S. 46 LITTLE FERRY CIRCLE

CONTRACT NO. 069950373

STORMWATER PUMP STATION	
DEWBERRY ENGINEERS INC. COA#24GA28047600	PARSONS BRINCKERHOFF, INC.
200 BROADACRES DRIVE, BLOOMFIELD NJ 07003	CERTIFICATION OF AUTHORIZATION NO. 24GA28029800
KEITH ITZLER	MICHAEL D. HELMLINGER
N.J. PROFESSIONAL ENGINEER NO. 24GE03636100	N.J. PROFESSIONAL ENGINEER NO. 24GE03812100

STATE	FEDERAL PROJECT NO.
N.J.	

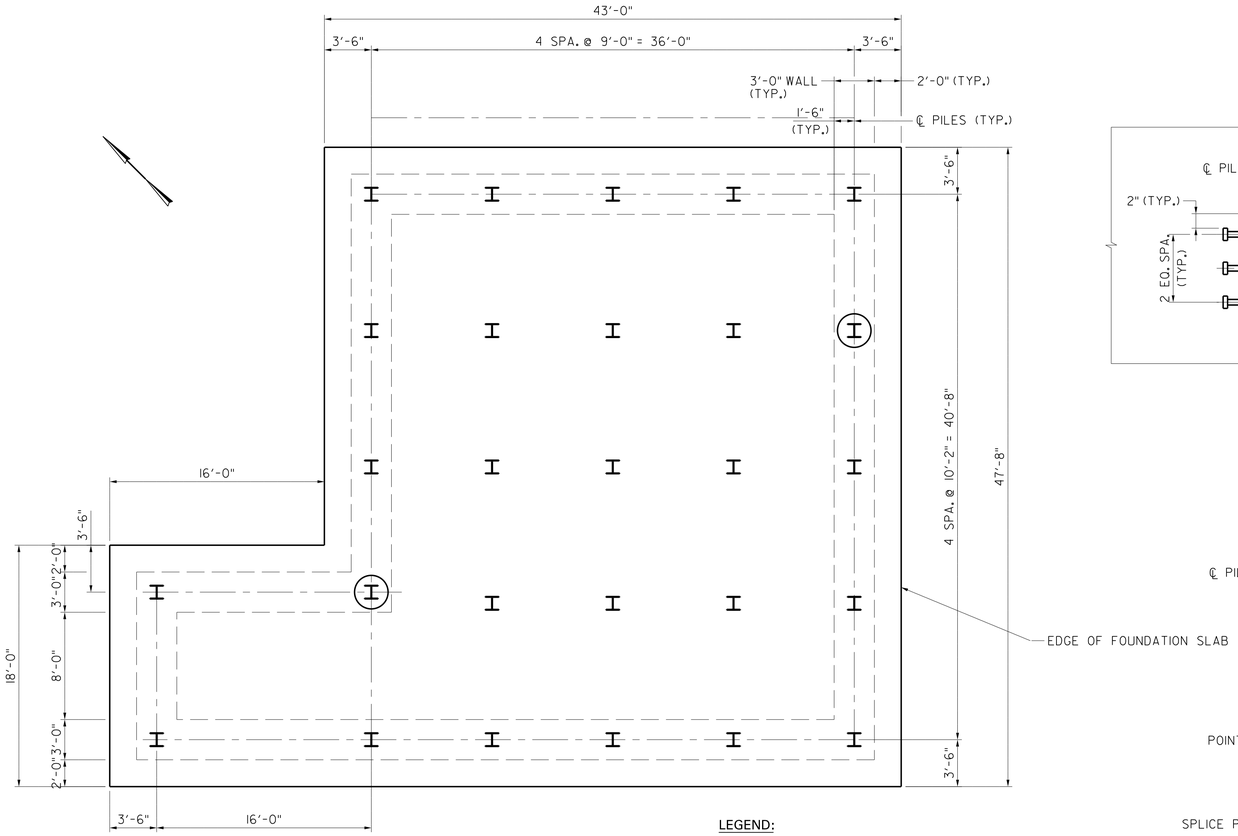

LEGEND:

I PROPOSED VERTICAL HP PILE.

(I) PROPOSED VERTICAL HP TEST PILE.

PILE PLAN

3/16" = 1'-0"

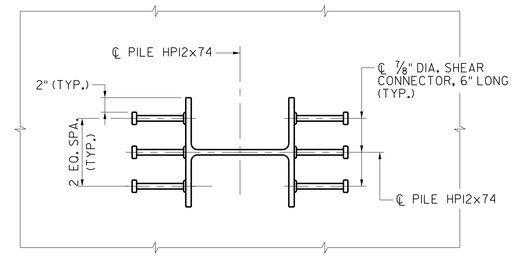

PLAN

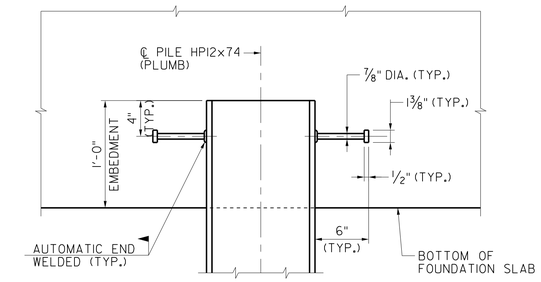

ELEVATION

NOTE:

FOUNDATION SLAB REINFORCEMENT NOT SHOWN FOR CLARITY.

TYPICAL PILE ANCHORAGE DETAIL

N.T.S

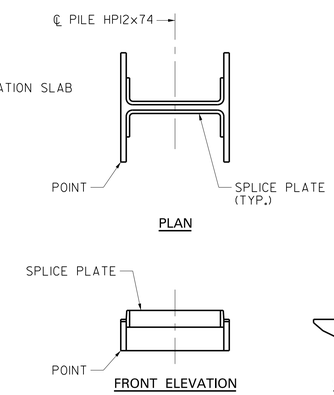

PILE TIP SHOE DETAILS

N.T.S.

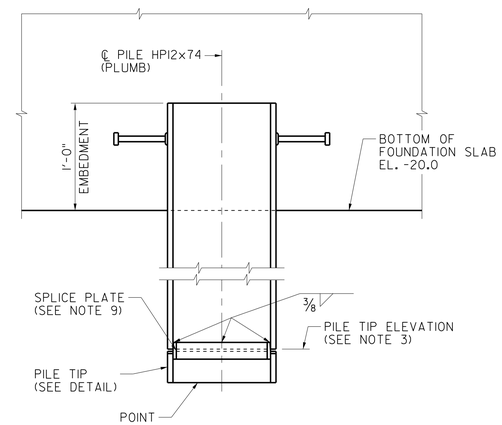

PILE ELEVATION

N.T.S.

NOTES:

1. ALL PILES SHALL BE HP 12X74, GRADE 50 PILES.
2. THE PILE ULTIMATE AND ALLOWABLE CAPACITIES ARE:

   ULTIMATE PILE COMPRESSION CAPACITY: 600 KIP
   ULTIMATE PILE UPLIFT CAPACITY: 225 KIP

3. THE PILE TIP ELEVATIONS ARE:

   ESTIMATED PILE TIP ELEVATION: -55 FT
   MINIMUM PILE TIP ELEVATION: -50 FT

4. THE CONTRACTOR SHALL SUBMIT A COMPLETED "PILE AND DRIVING EQUIPMENT DATA FORM" AND WAVE EQUATION ANALYSIS USING WEAP TO DEMONSTRATE THAT PILES CAN BE DRIVEN WITH REASONABLE EFFORT AS INDICATED IN THE SPECIFICATIONS TO THE ORDERED LENGTHS WITHOUT DAMAGE.
5. THE CONTRACTOR SHALL CONDUCT PDA MEASUREMENTS AND CAPWAP ANALYSIS FOR THOSE DESIGNATED PILES OR AS DIRECTED BY THE RESIDENT ENGINEER.
6. ALL PILES SHALL BE FITTED WITH A PILE SHOE PRIOR TO DRIVING.
7. MATERIAL OF CAST STEEL PILE TIP SHOE SHALL CONFORM TO AASHTO M103 (ASTM - A27) GRADE 65-35, CLASS 2. DETAILS ARE TO BE AS PER PILE TIP MANUFACTURER.
8. ALL FILLET WELDS SHALL BE 3/8" UNLESS OTHERWISE NOTED.
9. ALL WELDS BETWEEN H-PILE AND PILE TIP SHOE SHALL BE IN ACCORDANCE WITH AWS STRUCTURAL WELDING CODE D1.1 SPECIFICATION (LATEST EDITION). WELD FLANGES TO FITTING ON OUTSIDE FACES.
10. ALL PILES DRIVEN AND FURNISHED, TEST PILES DRIVEN AND FURNISHED, FURNISHING EQUIPMENT FOR DRIVING PILES, DYNAMIC PILE LOAD TEST, PILE SHOES AND SHEAR CONNECTORS SHALL BE PAID FOR UNDER PAY ITEM "STORMWATER PUMPING STATION".

STRUCTURAL WORK ITEMS

DESCRIPTION	UNIT	WORK ITEM QUANTITIES
FURNISHING EQUIPMENT FOR DRIVING PILES	LS	1
TEST PILE, FURNISHED	LF	104
TEST PILE, DRIVEN	LF	104
STEEL H-PILE, FURNISHED, HP 12 X 74	LF	1175
STEEL H-PILE, DRIVEN, HP 12 X 74	LF	1175
DYNAMIC PILE LOAD TEST	U	2
PILE SHOE	U	27

3/16" = 1'-0" 1' 0 2' 4' 8' 16'

1 1/2" = 1'-0" 1' 6" 0 1'

PILE PLAN AND DETAILS

DTL-34

NEW JERSEY DEPARTMENT OF TRANSPORTATION

CONSTRUCTION DETAILS

ROUTE U.S. 46 LITTLE FERRY CIRCLE

CONTRACT NO. 069950373

PARSONS BRINCKERHOFF, INC.
CERTIFICATION OF AUTHORIZATION NO. 24GA28029800

KWANG S. RO
N.J. PROFESSIONAL ENGINEER NO. 24GE04382200

160

PARSONS BRINCKERHOFF CADD DATA

OPERATOR	birtta	QUEUE	\\ompr1pr101\PRIPL03_BW1.IP
PLOT DATE	07-MAR-2013 17:12		
PENTABLE	enx.tbl		
DESIGN FILE	T:\20063\str\pil01.dgn		

STATE	FEDERAL PROJECT NO.
N.J.	

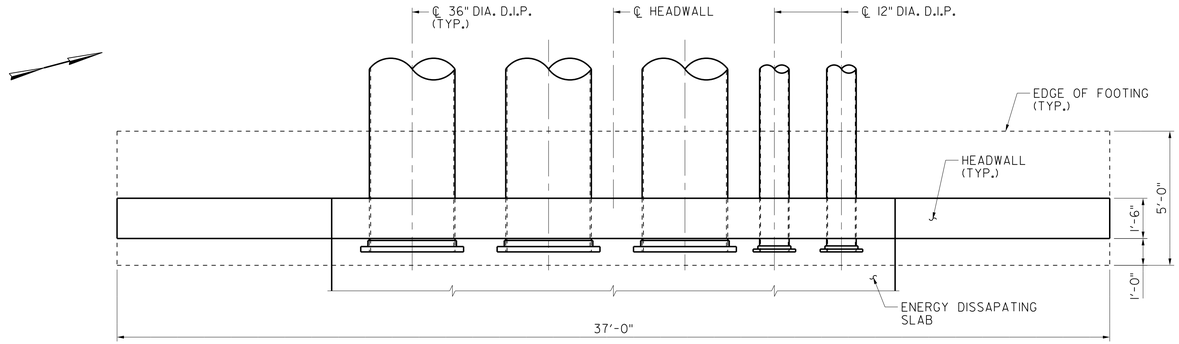

PLAN
3/8" = 1'-0"

NOTE:
BITUMINOUS SURFACE AND FLAP VALVES NOT SHOWN FOR CLARITY.

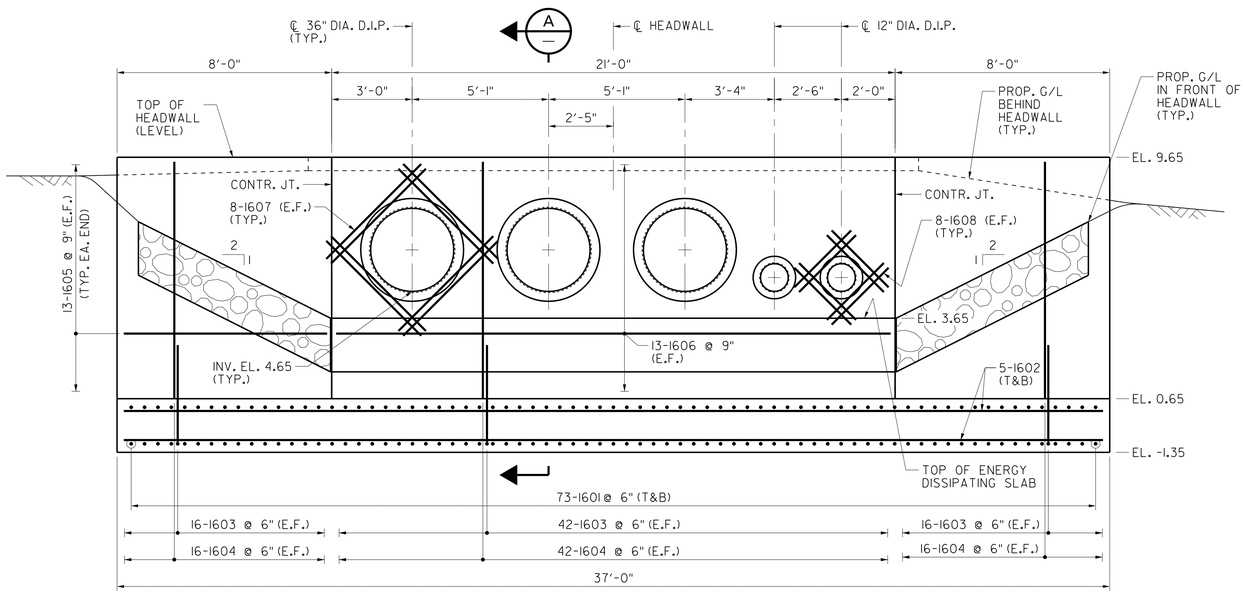

ELEVATION
3/8" = 1'-0"

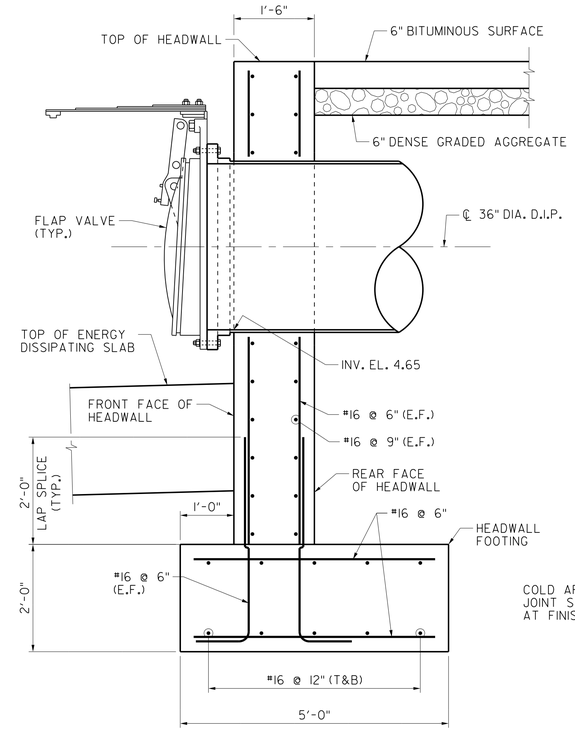

SECTION A
3/4" = 1'-0"

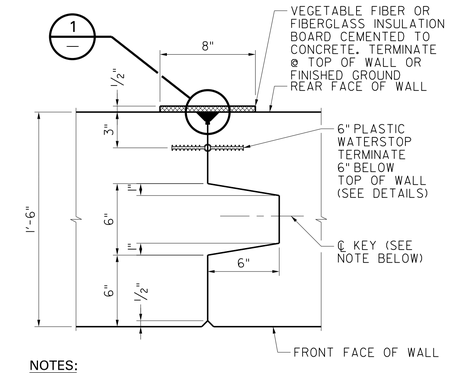

NOTES:
1. KEY TO EXTEND FROM TOP OF FOOTING TO 1'-0" BELOW TOP OF WALL.
2. REINFORCEMENT STEEL NOT SHOWN FOR CLARITY.

WALL CONTRACTION JOINT
N.T.S.

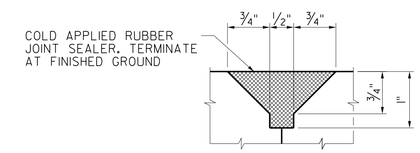

DETAIL 1
N.T.S.

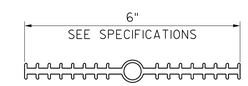

PLASTIC WATERSTOP
N.T.S.

STRUCTURAL WORK ITEMS		
DESCRIPTION	UNIT	WORK ITEM QUANTITIES
REINFORCEMENT STEEL, EPOXY-COATED	LB	3500
REINFORCEMENT STEEL	LB	1100
CONCRETE FOOTING	CY	14
CONCRETE WING WALL	CY	19

MARK	TYPE	LENGTH FT.	LENGTH IN.	NO. OF UNITS	NO. OF BARS/ UNIT	TOTAL NO. OF BARS	CORR. PROT.	A FT.	A IN.	B FT.	B IN.	C FT.	C IN.	REMARKS D FT.	D IN.	E FT.	E IN.	F FT.	F IN.	G FT.	G IN.
HEADWALL																					
1601	STR	4'	-6"	2	73	146															
1602	STR	36'	-6"	2	5	10															
1603	F	4'	-9"	2	74	148	E	3'	-9"	1'	-0"	3'	-9"	D=0							
1604	STR	8'	-10"	2	74	148	E														
1605	STR	7'	-7"	4	13	52	E														
1606	STR	20'	-8"	2	13	26	E														
1607	STR	5'	-0"	6	8	48	E														
1608	STR	3'	-0"	4	8	32	E														

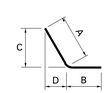

F

NOTES:
1. CONCRETE FOR STRUCTURE: CLASS B CONCRETE.
2. REINFORCEMENT STEEL: ASTM A615M (GRADE 60), FS = 24 KSI.
3. ALL HEADWALL ELEMENTS, INCLUDING FLAP VALVES SHALL BE PAID FOR UNDER PAY ITEM "STORMWATER PUMPING STATION".
4. CONTRACT SHALL FIELD CUT REINFORCEMENT STEEL IN HEADWALL AROUND PIPE LOCATION AS NECESSARY TO AVOID ANY CONFLICTS.
5. THE HEADWALL SPREAD FOOTING BEARING CAPACITIES ARE:

   ULTIMATE BEARING CAPACITY: 9 KSF

3/8" = 1'-0" 1' 0 2' 4' 8'
3/4" = 1'-0" 1' 0 1' 2' 4'

HEADWALL DETAILS
DTL-35

NEW JERSEY DEPARTMENT OF TRANSPORTATION

CONSTRUCTION DETAILS

ROUTE U.S. 46 LITTLE FERRY CIRCLE

CONTRACT NO. 069950373

PARSONS BRINCKERHOFF, INC.
CERTIFICATION OF AUTHORIZATION NO. 24GA28029800

JOSEPH MUMBER
N.J. PROFESSIONAL ENGINEER NO. 24GE02593700

PARSONS BRINCKERHOFF CADD DATA
OPERATOR birtta QUEUE \\ompr\pr+01\PRIPL03.BW|P
PLOT DATE 07-MAR-2013 17:12
PENTABLE ehx.tbl
DESIGN FILE T:\20063\str\dt01.dgn

STATE	FEDERAL PROJECT NO.
N.J.	

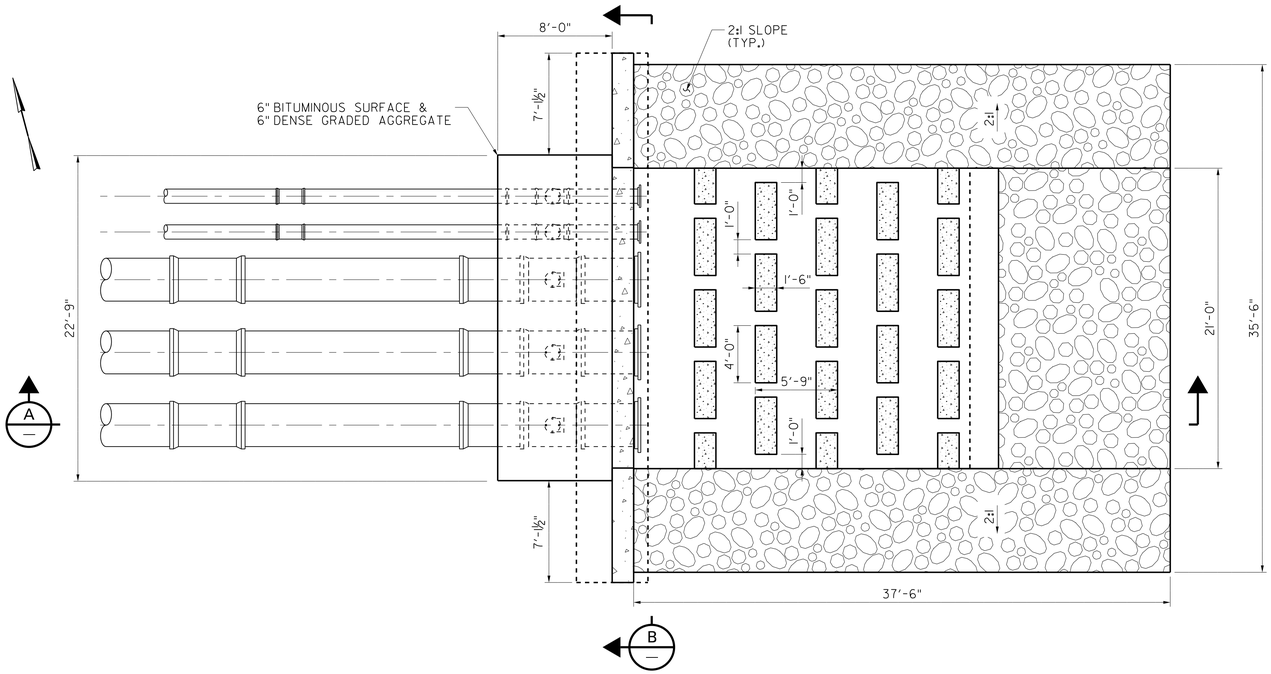

PLAN
1" = 5'

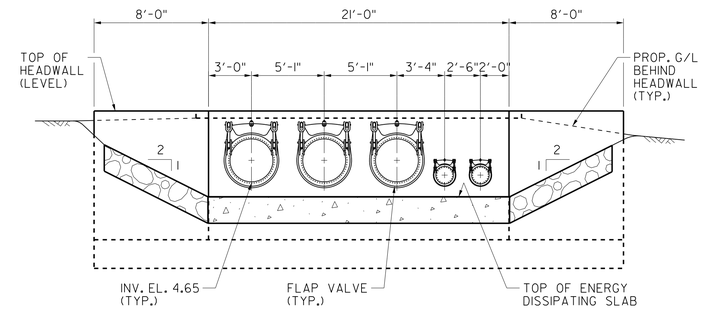

SECTION B
1" = 5'

NOTES:

1. ALL HEADWALL ELEMENTS, INCLUDING FLAP VALVE SHALL BE PAID FOR UNDER PAY ITEM "STORMWATER PUMPING STATION".
2. FOR ADDITIONAL INFORMATION, SEE SHEET "HEADWALL DETAILS" ON DTL-35.
3. FOR ENERGY DISSIPATING SLAB REINFORCEMENT DETAILS, SEE DTL-33.

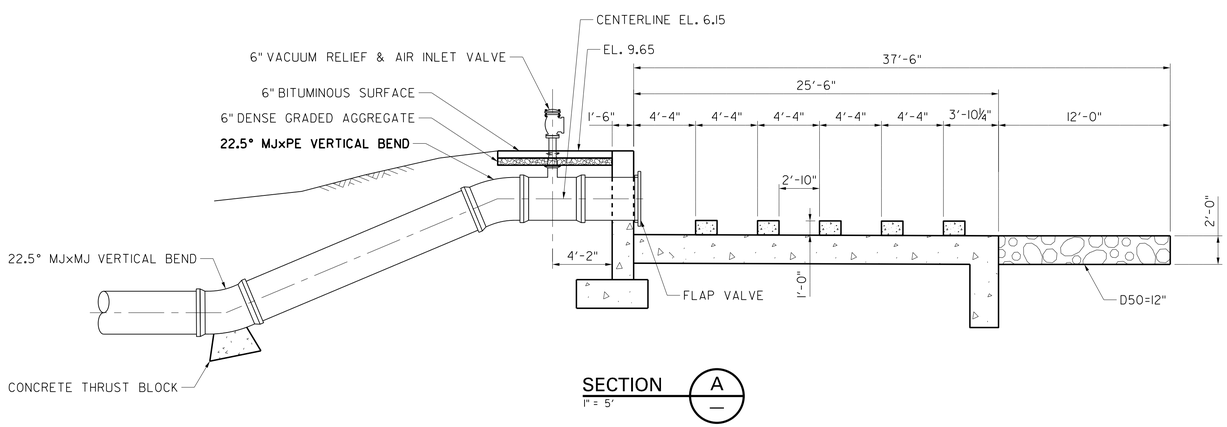

SECTION A
1" = 5'

1" = 5'
5' 0 5' 10'

DISSIPATING SLAB DETAILS

DTL-36

NEW JERSEY DEPARTMENT OF TRANSPORTATION

CONSTRUCTION DETAILS

ROUTE U.S. 46 LITTLE FERRY CIRCLE

CONTRACT NO. 069950373

PARSONS BRINCKERHOFF, INC.
CERTIFICATION OF AUTHORIZATION NO. 24GA28029800

JOSEPH MUMBER
N.J. PROFESSIONAL ENGINEER NO. 24GE02593700

PARSONS BRINCKERHOFF CADD DATA
OPERATOR birtta QUEUE \\ampr1pr1t01\PRIPL03.BW|P
PLOT DATE 07-MAR-2013 17:12
PENTABLE ehx.tbl
DESIGN FILE T:\20063\str\dt03.dgn

STATE	FEDERAL PROJECT NO.
N.J.	

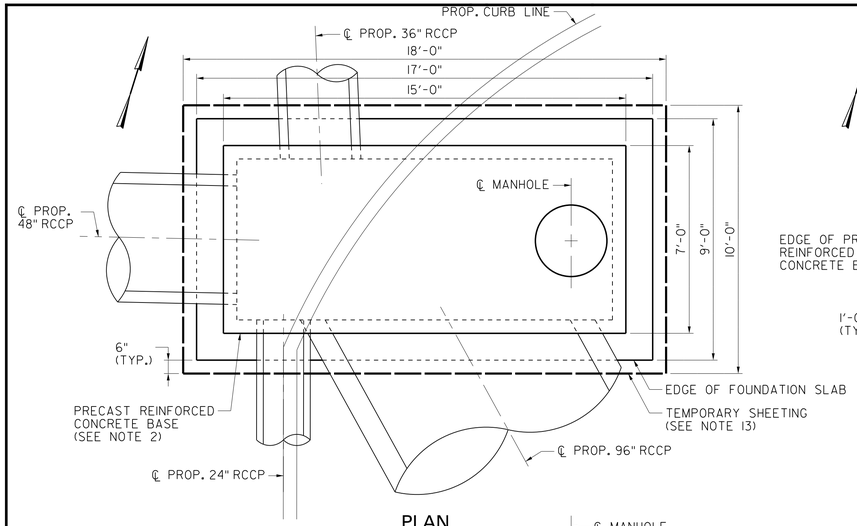

PLAN

3/8" = 1'-0"

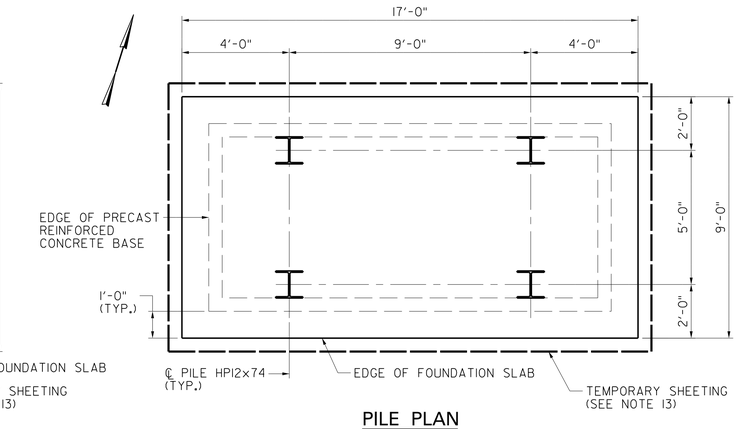

PILE PLAN

3/8" = 1'-0"

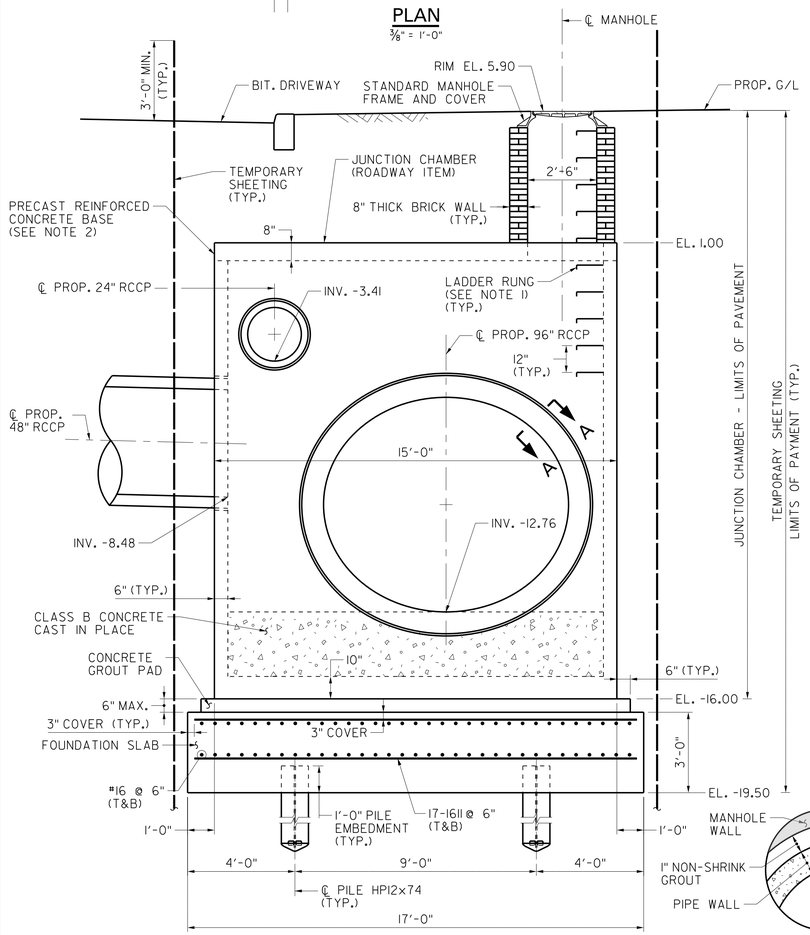

ELEVATION

3/8" = 1'-0"

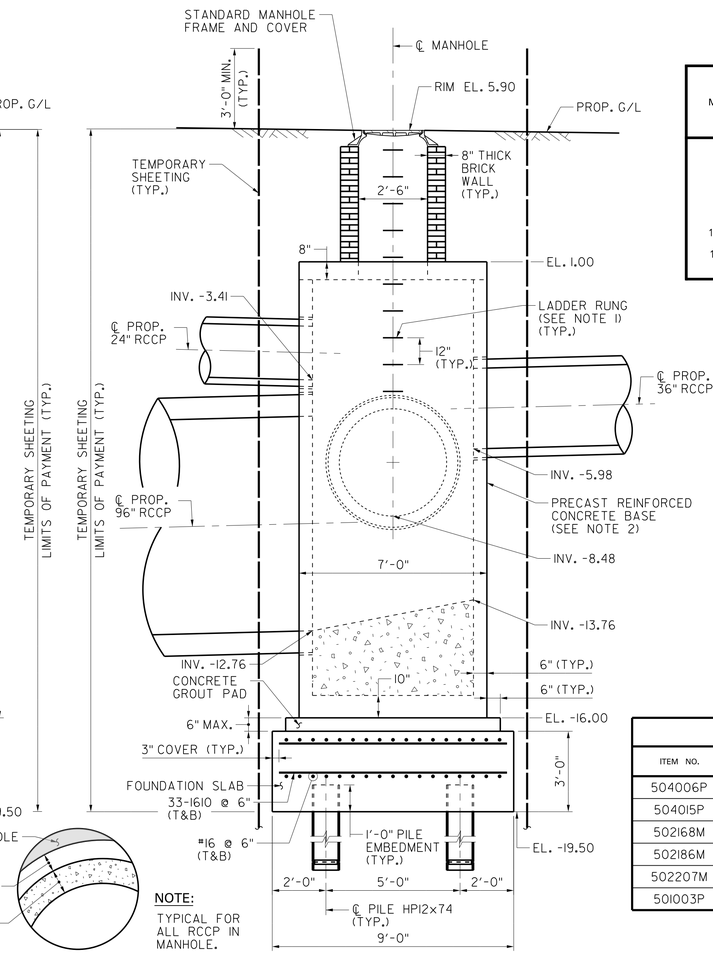

SIDE VIEW

3/8" = 1'-0"

SECTION A–A

N.T.S.

NOTE:

TYPICAL FOR ALL RCCP IN MANHOLE.

NOTES:

1. FOR LADDER RUNG DETAILS, SEE NJDOT STANDARD DRAWING CD-602-1.
2. THE PRECAST REINFORCED CONCRETE BASE SHALL BE DESIGNED BY THE CONTRACTOR AND SHALL BE SUBMITTED TO THE ENGINEER FOR APPROVAL. REINFORCEMENT STEEL SHALL BE IN ACCORDANCE WITH ASTM C478, f'c = 5,000 PSI.
3. ALL PILES SHALL BE HP 12X74, GRADE 50 PILES.
4. THE PILE ULTIMATE AND ALLOWABLE CAPACITIES ARE:
   ULTIMATE PILE COMPRESSION CAPACITY: 600 KIP
   ULTIMATE PILE UPLIFT CAPACITY: 225 KIP
5. THE PILE TIP ELEVATIONS ARE: ESTIMATED PILE TIP ELEVATION: -55 FT
   MINIMUM PILE TIP ELEVATION: -50 FT
6. THE CONTRACTOR SHALL SUBMIT A COMPLETED "PILE AND DRIVING EQUIPMENT DATA FORM" AND WAVE EQUATION ANALYSIS USING WEAP TO DEMONSTRATE THAT PILES CAN BE DRIVEN WITH REASONABLE EFFORT AS INDICATED IN THE SPECIFICATIONS TO THE ORDERED LENGTHS WITHOUT DAMAGE.
7. ALL PILES SHALL BE FITTED WITH A PILE SHOE PRIOR TO DRIVING.
8. MATERIAL OF CAST STEEL PILE TIP SHOE SHALL CONFORM TO AASHTO M103 (ASTM - A27) GRADE 65-35, CLASS 2. DETAILS ARE TO BE AS PER PILE TIP MANUFACTURER.
9. ALL FILLET WELDS SHALL BE 3/8" UNLESS OTHERWISE NOTED.
10. ALL WELDS BETWEEN H-PILE AND PILE TIP SHOE SHALL BE IN ACCORDANCE WITH AWS STRUCTURAL WELDING CODE D1.1 SPECIFICATION (LATEST EDITION). WELD FLANGES TO SPLICE PLATE ON OUTSIDE FACES.
11. FOUNDATION SLAB MATERIAL: (A) CONCRETE STRUCTURE: CLASS B CONCRETE.
    (B) REINFORCEMENT STEEL: ASTM A615M (GRADE 60), FS = 24 KSI.
12. PRECAST REINFORCED CONCRETE BASE SHALL BE PAID FOR UNDER PAY ITEM "JUNCTION CHAMBER".
13. FURNISHING EQUIPMENT FOR DRIVING PILES SHALL BE PAID FOR UNDER PAY ITEM "STORMWATER PUMPING STATION".
14. THE DESIGN AND DETAILS OF THE TEMPORARY SHEETING SHALL BE SUBMITTED TO THE ENGINEER FOR APPROVAL.

MARK	TYPE	LENGTH FT.	LENGTH IN.	NO. OF UNITS	NO. OF BARS/ UNIT	TOTAL NO. OF BARS	CORR. PROT.	A FT.	A IN.	B FT.	B IN.	C FT.	C IN.	REMARKS D FT.	D IN.	E FT.	E IN.	F FT.	F IN.	G FT.	G IN.
FOUNDATION SLAB																					
1610	STR	8'	-6"	2	33	66	E														
1611	STR	16'	-6"	2	17	34	E														

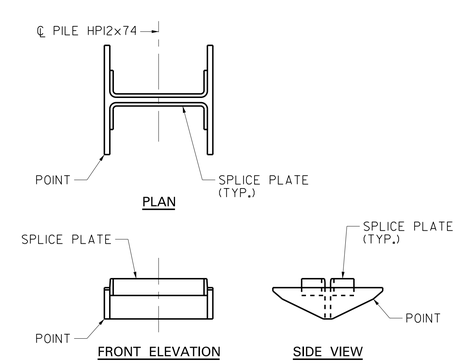

PILE TIP SHOE DETAILS

N.T.S.

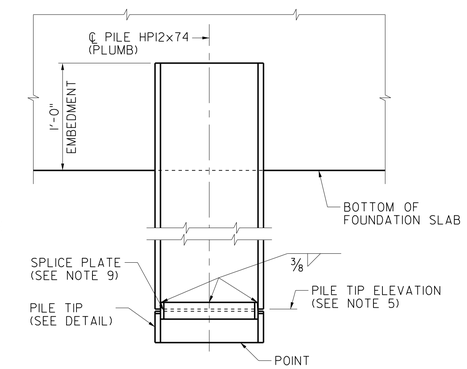

PILE ELEVATION

N.T.S.

QUANTITIES

ITEM NO.	DESCRIPTION	UNIT	CONTRACT QUANTITIES
504006P	REINFORCEMENT STEEL, EPOXY-COATED	LB	1180
504015P	CONCRETE FOOTING	CY	17
502168M	STEEL H-PILE, FURNISHED, HP 12 X 74	LF	188
502186M	STEEL H-PILE, DRIVEN, HP 12 X 74	LF	188
502207M	PILE SHOE	U	4
501003P	TEMPORARY SHEETING	SF	1428

3/8" = 1'-0" 1' 0 2' 4' 8'

1 1/2" = 1'-0" 1' 6" 0 1'

JUNCTION CHAMBER AND FOUNDATION DETAILS

DTL-37

NEW JERSEY DEPARTMENT OF TRANSPORTATION

CONSTRUCTION DETAILS

ROUTE U.S. 46 LITTLE FERRY CIRCLE

CONTRACT NO. 069950373

PARSONS BRINCKERHOFF, INC.
CERTIFICATION OF AUTHORIZATION NO. 24GA28029800

JOSEPH MUMBER
N.J. PROFESSIONAL ENGINEER NO. 24GE02593700

PARSONS BRINCKERHOFF CADD DATA

OPERATOR	birtta	QUEUE	\\amprlpr10\PRIPL03.BW\IP
PLOT DATE	07-MAR-2013 17:12		
PENTABLE	enx.tbl		
DESIGN FILE	T:\20063\str\dt02.dgn		

STATE	FEDERAL PROJECT NO.
N.J.	

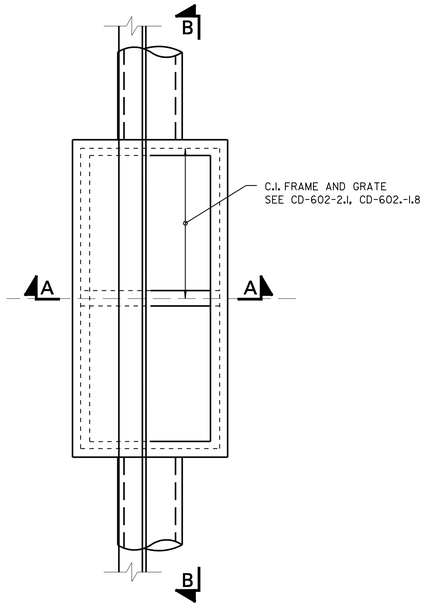

PLAN

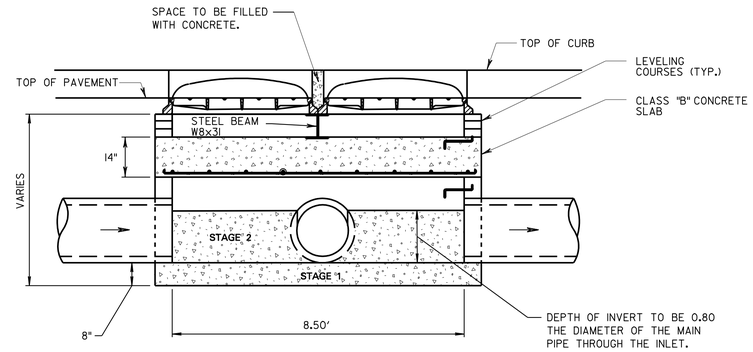

SECTION B–B
N.T.S.

FOUNDATION AND INVERT TO BE
CONSTRUCTED IN 2 STAGES. TOP
SURFACE OF STAGE 1 TO BE LEFT ROUGH.

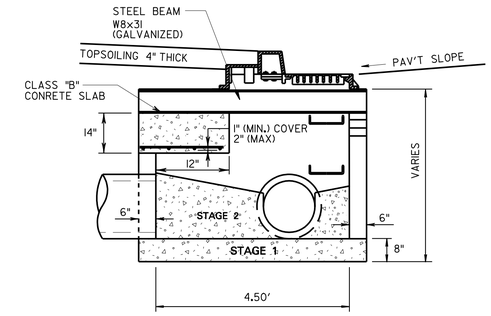

SECTION A–A
N.T.S.

INLETS, TYPE DOUBLE B1

N.T.S.

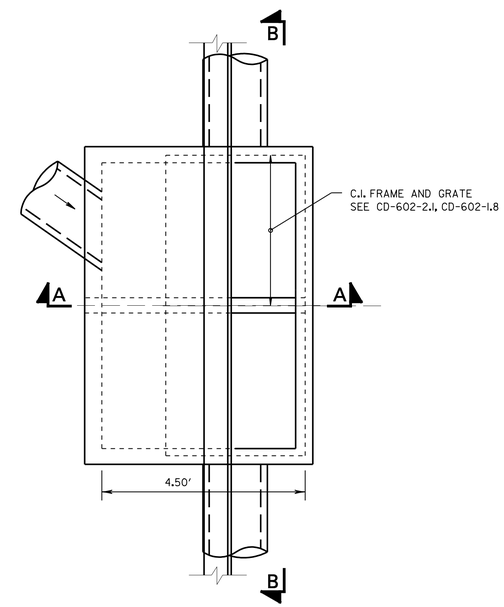

PLAN
N.T.S.

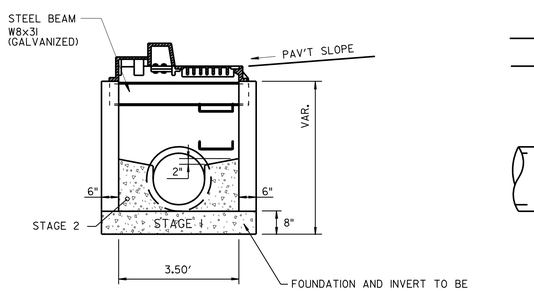

SECTION A–A
N.T.S.

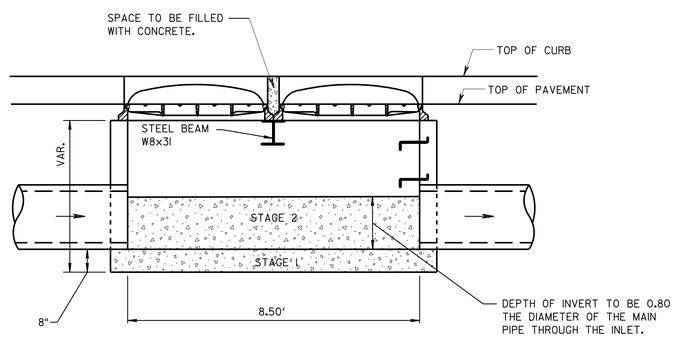

SECTION B–B
N.T.S.

INLETS, TYPE DOUBLE B

N.T.S.

INLETS, TYPE DOUBLE B

INLETS, TYPE DOUBLE B1

NOTES:

1. FOR GENERAL NOTES SEE CONSTRUCTION DETAIL CD-602-1.
   SEE CONSTRUCTION DETAILS CD-602-3, CD-602-2.
   FOR C.I. FRAME AND GRATE DETAILS, SEE CD 602-1 AND CD 602-2
   THE CONTRACTOR SHALL FIELD VERIFY ALL DIMENSIONS PRIOR TO
   CONSTRUCTION OR FABRICATION OF INLETS.
2. REINFORCEMENT IN THE WALLS AND TOP SLAB SHALL BE DESIGNED BY THE
   CONTRACTOR AND SUBMITTED TO THE ENGINEER FOR APPROVAL

DTL-38
DTL-44

NEW JERSEY DEPARTMENT OF TRANSPORTATION

CONSTRUCTION DETAILS

ROUTE U.S. 46 LITTLE FERRY CIRCLE

CONTRACT NO. 069950373

PARSONS BRINCKERHOFF, INC.
CERTIFICATION OF AUTHORIZATION NO. 24GA28029800

MICHAEL D. HELMLINGER
N.J. PROFESSIONAL ENGINEER NO. 24GE03812100

164

PARSONS BRINCKERHOFF CADD DATA

OPERATOR	HeNg	QUEUE	\\Ampr1pr-t01\PRIPL03.BW.IP
PLOT DATE	06-MAR-2013 15:35		
PENTABLE	ehx.tbl		
DESIGN FILE	T:\20063\CD01.dgn		

STATE	FEDERAL PROJECT NO.
N.J.	

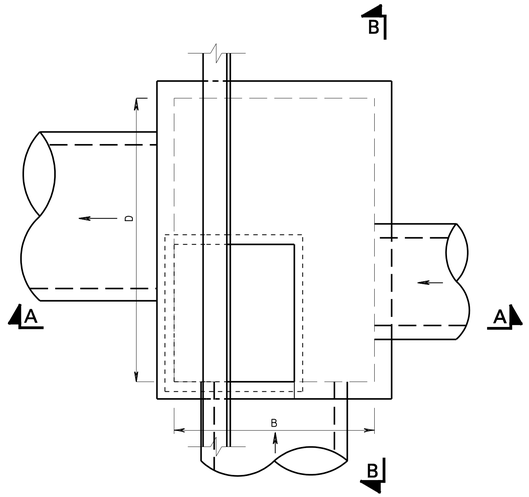

PLAN

TYPE	A	B	C	D
B2X	2'	5.5'	6'	6'
B3X	3'	6.5'	7'	7'

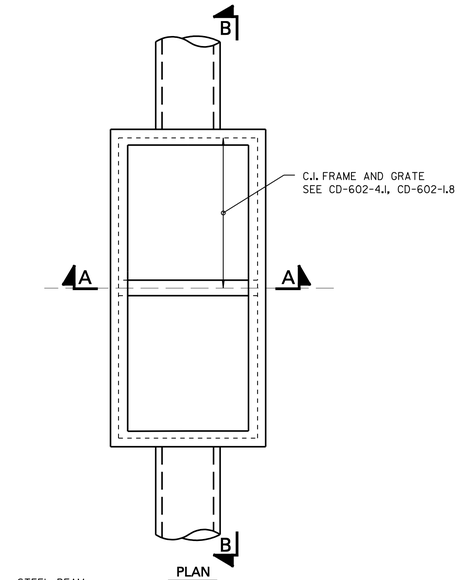

PLAN

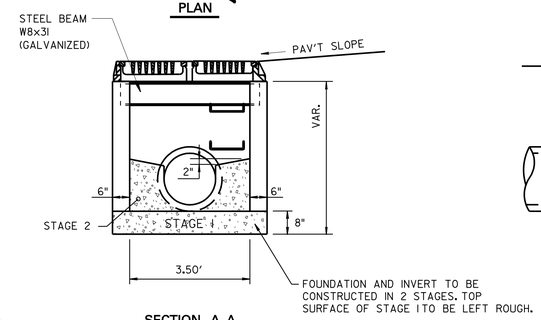

SECTION A–A
N.T.S.

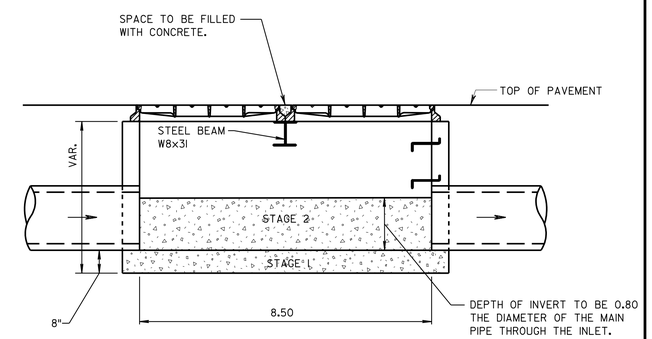

SECTION B–B
N.T.S.

INLETS, TYPE DOUBLE E

N.T.S.

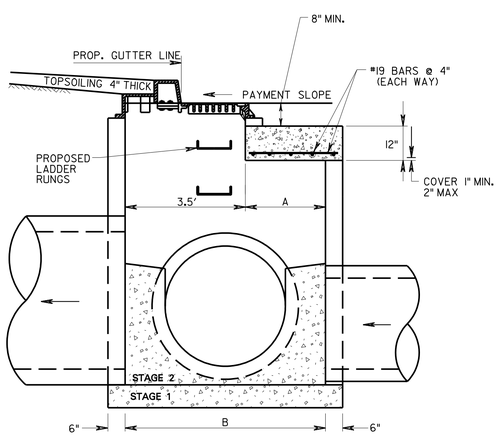

FOUNDATION AND INVERT
TO BE CONSTRUCTED IN 2
STAGES. TOP SURFACE OF
STAGE 1 TO BE LEFT ROUGH

SECTION A–A

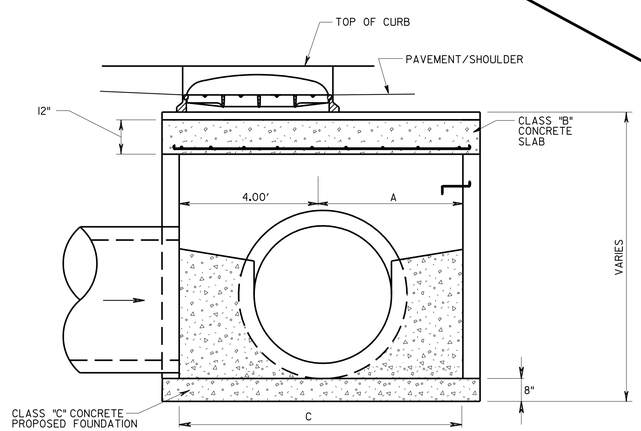

SECTION B–B

INLETS, TYPES B2X – B3X

N.T.S.

INLETS, TYPE DOUBLE E

INLETS, TYPES B2X – B3X

NOTES:

1. FOR GENERAL NOTES SEE CONSTRUCTION DETAIL CD-602-1.
   SEE CONSTRUCTION DETAILS CD-602-3, CD-602-2.
   FOR C.I. FRAME AND GRATE DETAILS, SEE CD 602-1 AND CD 602-2
   THE CONTRACTOR SHALL FIELD VERIFY ALL DIMENSIONS PRIOR TO
   CONSTRUCTION OR FABRICATION OF INLETS.
2. REINFORCEMENT IN THE WALLS AND TOP SLAB SHALL BE DESIGNED BY THE
   CONTRACTOR AND SUBMITTED TO THE ENGINEER FOR APPROVAL

DTL-39
DTL-44

NEW JERSEY DEPARTMENT OF TRANSPORTATION

CONSTRUCTION DETAILS

ROUTE U.S. 46 LITTLE FERRY CIRCLE

CONTRACT NO. 069950373

PARSONS BRINCKERHOFF, INC.
CERTIFICATION OF AUTHORIZATION NO. 24GA28029800

MICHAEL D. HELMLINGER
N.J. PROFESSIONAL ENGINEER NO. 24GE03812100

PARSONS BRINCKERHOFF CADD DATA

OPERATOR	HeNa	QUEUE	\\Ampr1pr+01\PRIPL03_BW_IP
PLOT DATE	06-MAR-2013 15:35		
PENTABLE	etx.tbl		
DESIGN FILE	T:\20063\CD02.dgn		

STATE	FEDERAL PROJECT NO.
N.J.	

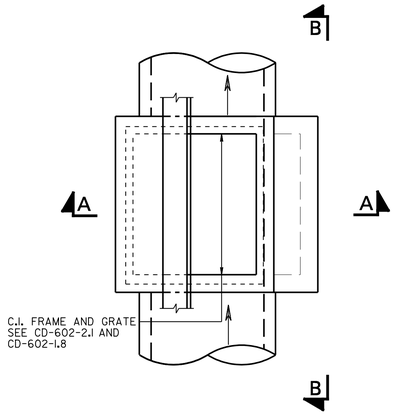

PLAN

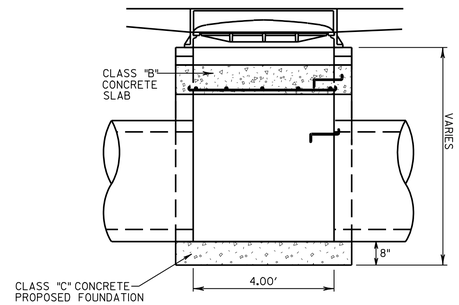

SECTION B–B

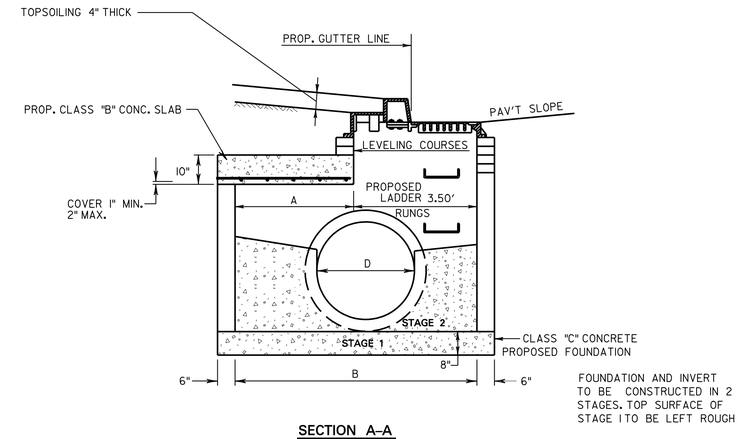

FOUNDATION AND INVERT TO BE CONSTRUCTED IN 2 STAGES. TOP SURFACE OF STAGE 1 TO BE LEFT ROUGH

SECTION A–A

TYPE	A	B
B3	3.0'	6.5'

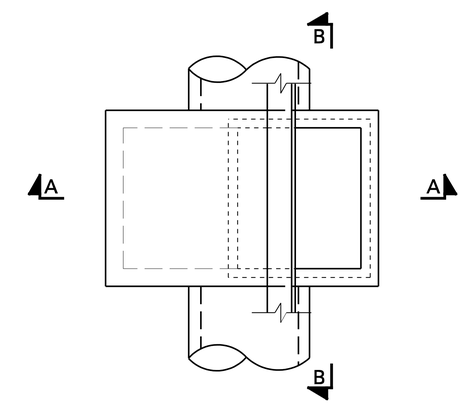

PLAN

INLETS, TYPES B3

N.T.S.

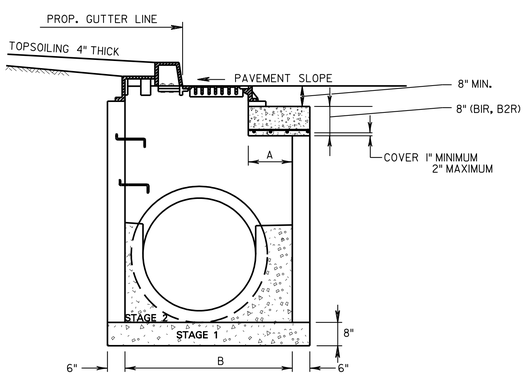

FOUNDATION AND INVERT TO BE CONSTRUCTED IN 2 STAGES. TOP SURFACE OF STAGE 1 TO BE LEFT ROUGH

SECTION A–A

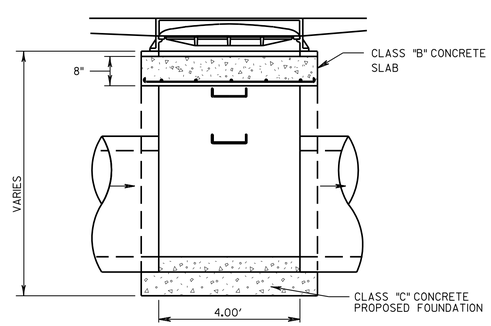

SECTION B–B

INLETS, TYPES B1R–B2R

N.T.S.

TYPE	A	B
B1R	1'	4.5'
B2R	2'	5.5'

INLETS, TYPE B3

INLETS, TYPE B1R–B2R

NOTES:

1. FOR GENERAL NOTES SEE CONSTRUCTION DETAIL CD-602-1. SEE CONSTRUCTION DETAILS CD-602-3, CD-602-2. FOR C.I. FRAME AND GRATE DETAILS, SEE CD 602-1 AND CD 602-2 THE CONTRACTOR SHALL FIELD VERIFY ALL DIMENSIONS PRIOR TO CONSTRUCTION OR FABRICATION OF INLETS.
2. REINFORCEMENT IN THE WALLS AND TOP SLAB SHALL BE DESIGNED BY THE CONTRACTOR AND SUBMITTED TO THE ENGINEER FOR APPROVAL

DTL-40
DTL-44

NEW JERSEY DEPARTMENT OF TRANSPORTATION

CONSTRUCTION DETAILS

ROUTE U.S. 46 LITTLE FERRY CIRCLE

CONTRACT NO. 069950373

PARSONS BRINCKERHOFF, INC.
CERTIFICATION OF AUTHORIZATION NO. 24GA28029800

MICHAEL D. HELMLINGER
N.J. PROFESSIONAL ENGINEER NO. 24GE03812100

PARSONS BRINCKERHOFF CADD DATA

OPERATOR	HeNa	QUEUE	\\Ampr1pr1t01\PRIPL03_BW_IP
PLOT DATE	06-MAR-2013 15:35		
PENTABLE	ehx.tbl		
DESIGN FILE	T:\20063\CD03.dgn		

STATE	FEDERAL PROJECT NO.
N.J.	

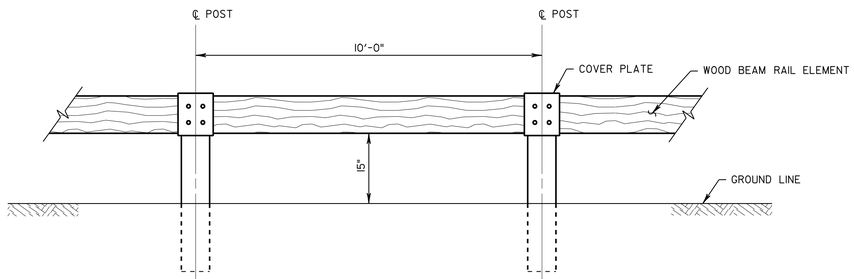

WOOD BEAM RAIL, WEATHERING STEEL POSTS

N.T.S.

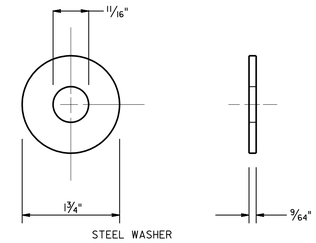

WASHER

N.T.S.

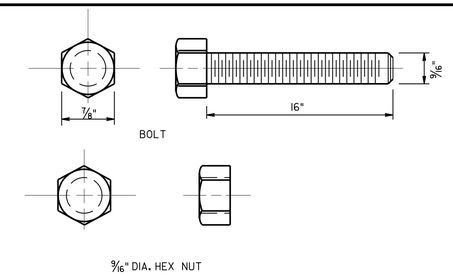

POST NUT & BOLT

N.T.S.

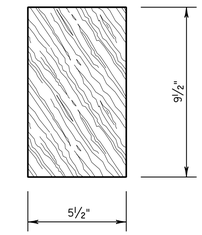

WOOD BEAM RAIL ELEMENT

RAIL ELEMENTS SHALL BE SUPPLIED IN LENGTHS OF 10'-0"

N.T.S.

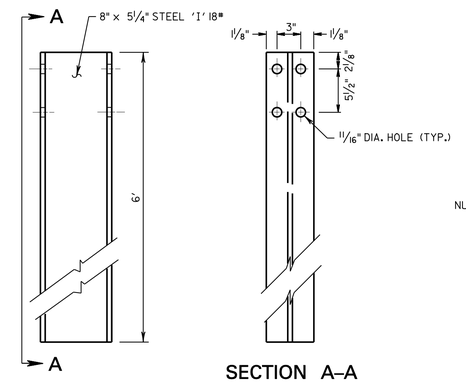

SECTION A–A

6' POST

N.T.S.

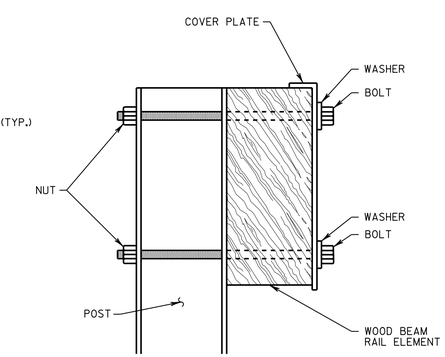

WOOD BEAM RAIL POST ASSEMBLY

N.T.S.

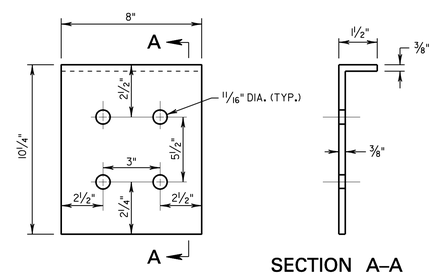

SECTION A–A

COVER PLATE

N.T.S.

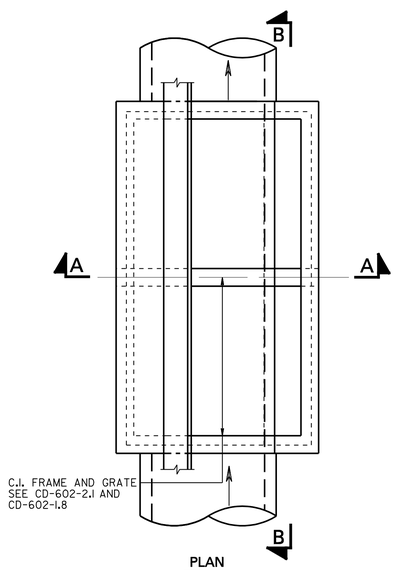

PLAN

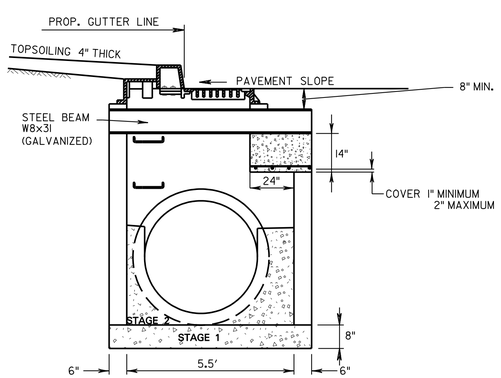

FOUNDATION AND INVERT TO BE CONSTRUCTED IN 2 STAGES. TOP SURFACE OF STAGE I TO BE LEFT ROUGH

SECTION A–A

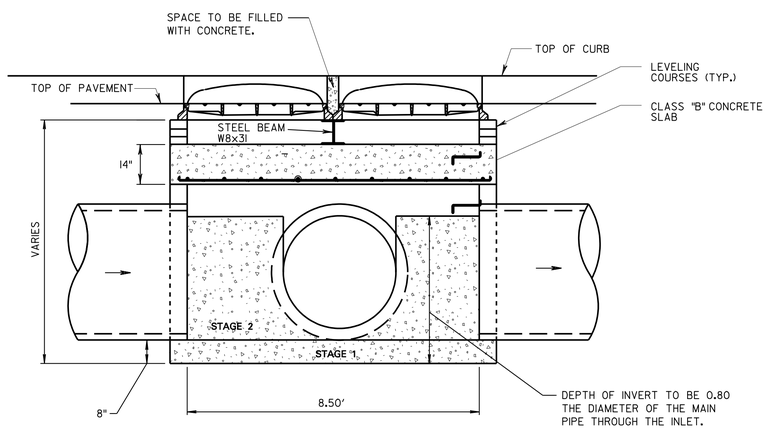

INLETS, TYPE DOUBLE B2R

N.T.S.

SECTION B–B

FOUNDATION AND INVERT TO BE CONSTRUCTED IN 2 STAGES. TOP SURFACE OF STAGE I TO BE LEFT ROUGH.

INLETS, TYPE DOUBLE B2R

WOOD BEAM RAIL

NOTES:

1. FOR GENERAL NOTES SEE CONSTRUCTION DETAIL CD-602-1. SEE CONSTRUCTION DETAILS CD-602-3, CD-602-2. FOR C.I. FRAME AND GRATE DETAILS, SEE CD 602-1 AND CD 602-2 THE CONTRACTOR SHALL FIELD VERIFY ALL DIMENSIONS PRIOR TO CONSTRUCTION OR FABRICATION OF INLETS.
2. REINFORCEMENT IN THE WALLS AND TOP SLAB SHALL BE DESIGNED BY THE CONTRACTOR AND SUBMITTED TO THE ENGINEER FOR APPROVAL

DTL-41
DTL-44

NEW JERSEY DEPARTMENT OF TRANSPORTATION

CONSTRUCTION DETAILS

ROUTE U.S. 46 LITTLE FERRY CIRCLE

CONTRACT NO. 069950373

PARSONS BRINCKERHOFF, INC.
CERTIFICATION OF AUTHORIZATION NO. 24GA28029800

MICHAEL D. HELMLINGER
N.J. PROFESSIONAL ENGINEER NO. 24GE03812100

PARSONS BRINCKERHOFF CADD DATA

OPERATOR	HeNa	QUEUE	\\Ampr1pr-t01\PRIPL03_BW1.IP
PLOT DATE	06-MAR-2013	15:35	
PENTABLE	ehx.tbl		
DESIGN FILE	T:\20063\CD04.dgn		

STATE	FEDERAL PROJECT NO.
N.J.	

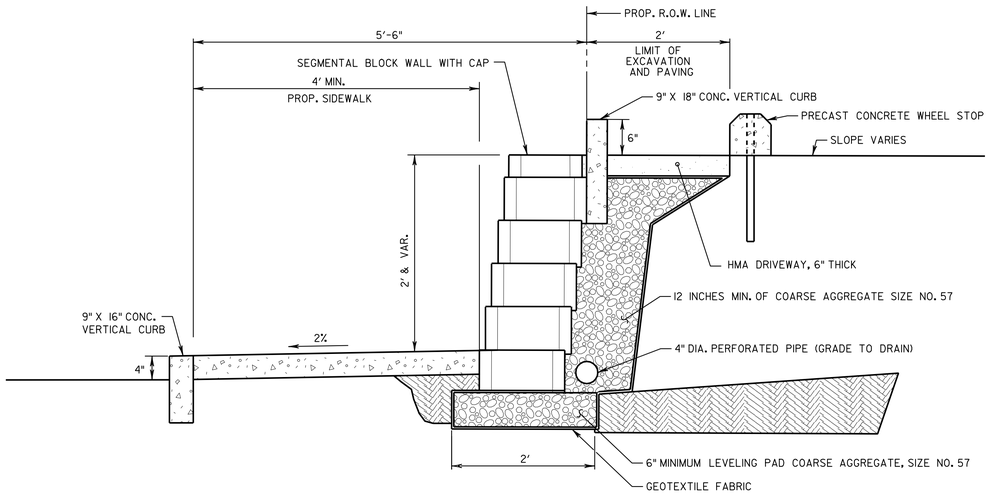

LANDSCAPE ACCENT WALL

N.T.S.

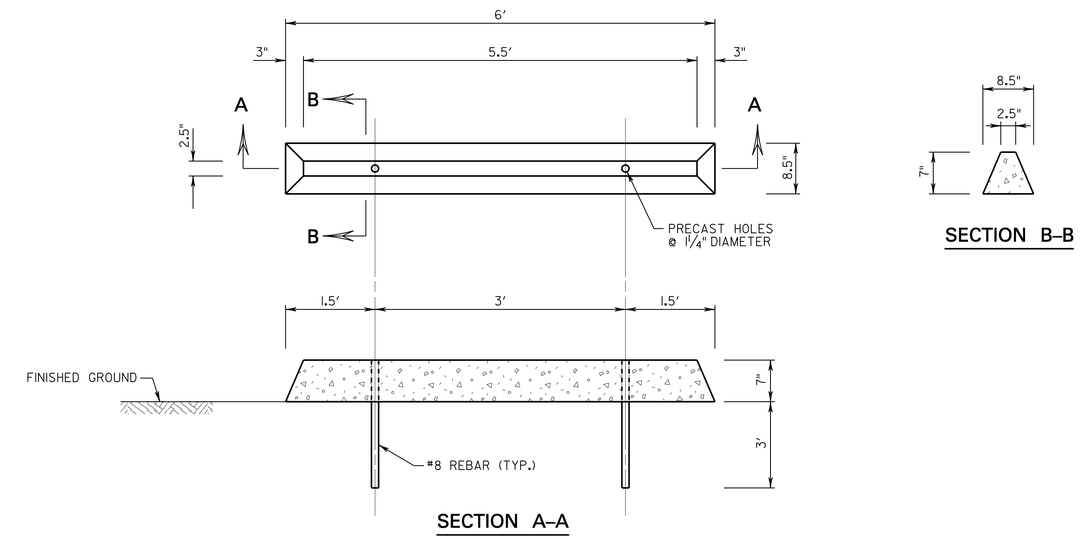

SECTION A–A

SECTION B–B

PRECAST CONCRETE WHEEL STOPS

N.T.S.

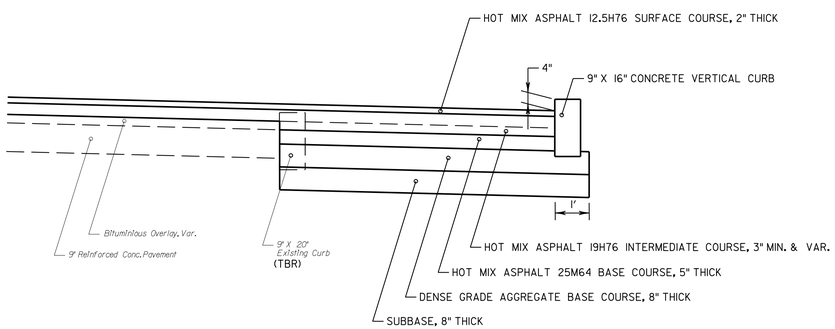

ROUTE 46 & BERGEN TURNPIKE
PAVEMENT WIDENING & RECONSTRUCTION

N.T.S.

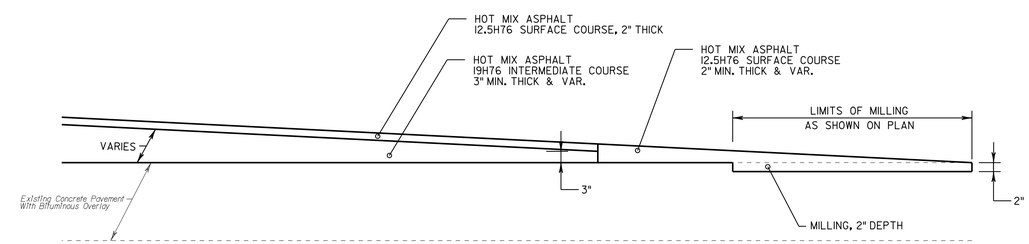

PAVEMENT TRANSITION DETAIL

N.T.S.

DTL-42
DTL-44

NEW JERSEY DEPARTMENT OF TRANSPORTATION

CONSTRUCTION DETAILS

ROUTE U.S. 46 LITTLE FERRY CIRCLE

CONTRACT NO. 069950373

PARSONS BRINCKERHOFF, INC.
CERTIFICATION OF AUTHORIZATION NO. 24GA28029800

MICHAEL D. HELMLINGER
N.J. PROFESSIONAL ENGINEER NO. 24GE03812100

PARSONS BRINCKERHOFF CADD DATA

OPERATOR	HeNg	QUEUE	\\Ampr1pr401\PRIPL03_BW.IP
PLOT DATE	06-MAR-2013 15:35		
PENTABLE	ehx.tbl		
DESIGN FILE	T:\20063\CD05.dgn		

STATE	FEDERAL PROJECT NO.
N.J.	

BEND	X
90°	1' - 11"
45°	1' - 5"
22½°	1' - 0"
11¼°	0' - 9"

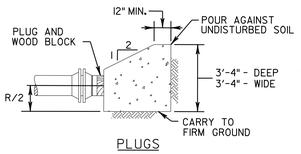

PLUGS

PLAN

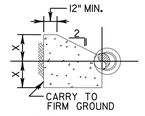

SECTION A-A

HORIZONTAL AND VERTICAL UPWARD BENDS

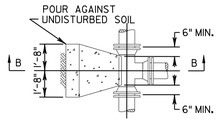

PLAN

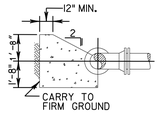

SECTION B-B

TEES

BEND	MIN. CONC. ANCHORAGE VOLUME
45°	3.9 C.Y.
22½°	2.0 C.Y.
11¼°	1.0 C.Y.

*MINIMUM CONCRETE ANCHORAGE WITHOUT BACK FILL AND NO GRAND WATER CONDITION

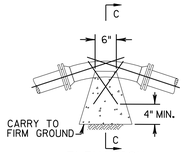

ELEVATION

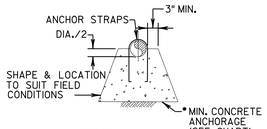

SECTION C-C

VERTICAL DOWNWARD BENDS

NOTE:

THRUST BLOCKS DESIGNED FOR 150 LB. PER SQ. IN. TEST PRESSURE AND 2000 LB PER SQ. FT. SOIL PRESSURE.

THRUST BLOCK DETAIL

N.T.S.

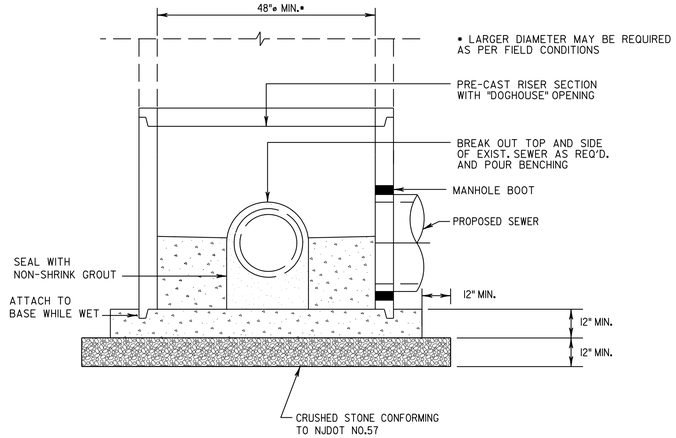

DOGHOUSE MANHOLE

N.T.S.

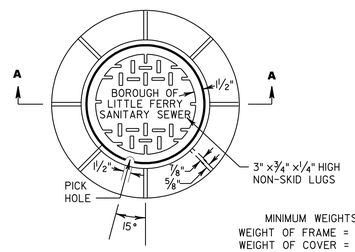

MINIMUM WEIGHTS
WEIGHT OF FRAME = 265#
WEIGHT OF COVER = 175#

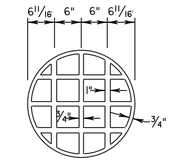

UNDERSIDE OF COVER

NOTE:

SEE GENERAL NOTE 10, CD-602-1.6

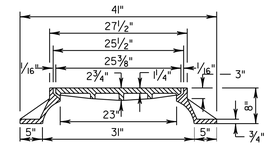

SECTION A-A

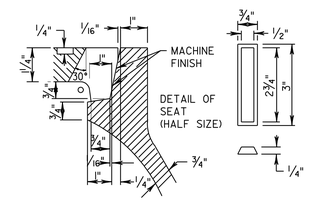

STANDARD SEWER MANHOLE FRAME AND COVER

N.T.S.

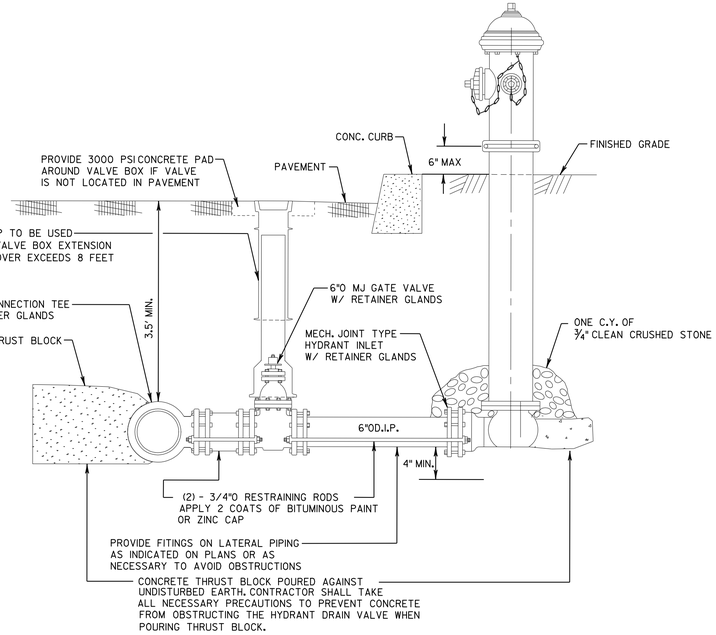

FIRE HYDRANT INSTALLATION DETAIL

N.T.S.

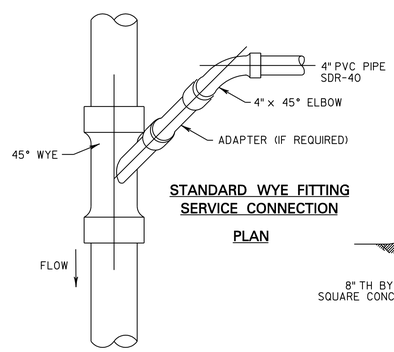

STANDARD WYE FITTING SERVICE CONNECTION

PLAN

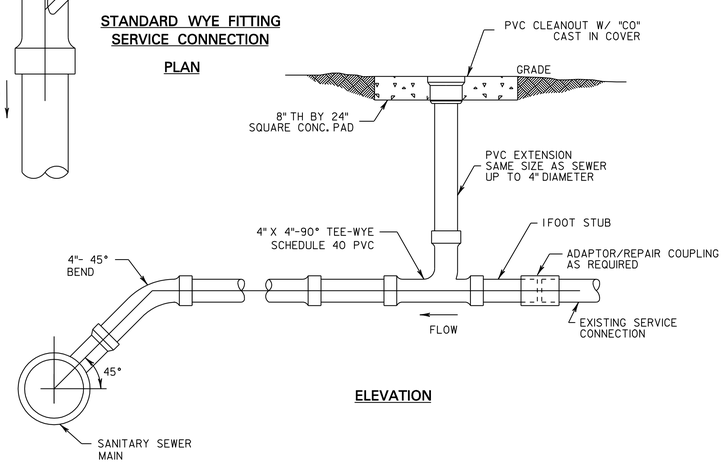

ELEVATION

TYPICAL SANITARY SERVICE CONNECTION & CLEANOUT

N.T.S.

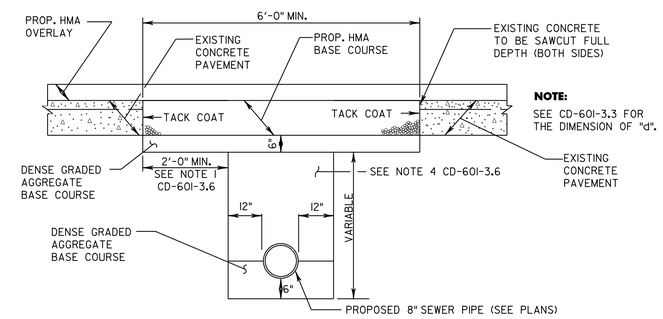

NOTE:

SEE CD-601-3.3 FOR THE DIMENSION OF "d".

SANITARY SEWER – TYPICAL TRENCH SECTION

N.T.S.

DTL-43
DTL-44

NEW JERSEY DEPARTMENT OF TRANSPORTATION

CONSTRUCTION DETAILS

ROUTE U.S. 46 LITTLE FERRY CIRCLE

CONTRACT NO. 069950373

PARSONS BRINCKERHOFF, INC.
CERTIFICATION OF AUTHORIZATION NO. 24GA28029800

MICHAEL D. HELMLINGER
N.J. PROFESSIONAL ENGINEER NO. 24GE03812100

PARSONS BRINCKERHOFF CADD DATA

OPERATOR	HeNg	QUEUE	\\Ampr1pr+t01\PRIPL03.BW.IP
PLOT DATE	06-MAR-2013 15:35		
PENTABLE	ehx.tbl		
DESIGN FILE	T:\20063\CD06.dgn		

STATE	FEDERAL PROJECT NO.
N.J.	

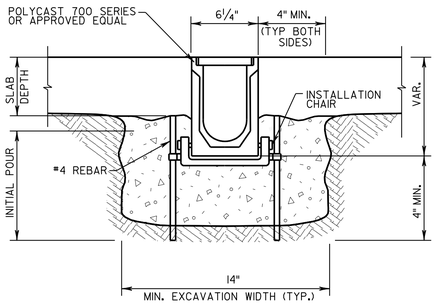

TRENCH DRAIN DETAIL

NTS

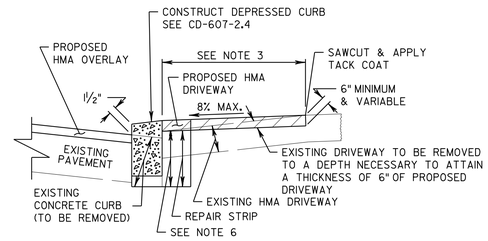

HMA DRIVEWAY

NTS

NOTES:

1. ALL MATERIAL, REPAIR STRIPS AND EXCAVATION FOR DRIVEWAY CONSTRUCTION TO BE INCLUDED IN THE BID PRICE FOR HMA DRIVEWAY, CONCRETE DRIVEWAY OR CONCRETE CURB.
2. USE HMA SURFACE COURSE FOR HMA DRIVEWAY
3. LENGTH OF DRIVEWAY WORK SHALL BE 7 FEET UNLESS OTHERWISE SHOWN ON PLANS OR AS DIRECTED.
4. MAINTAIN EXISTING DIRECTION OF FLOW ON DRIVEWAY.
5. DENSE GRADED AGGREGATE BASE COURSE SHALL BE USED TO PROVIDE TEMPORARY ACCESS DURING DRIVEWAY CONSTRUCTION.
6. DENSE GRADED AGGREGATE BASE COURSE.

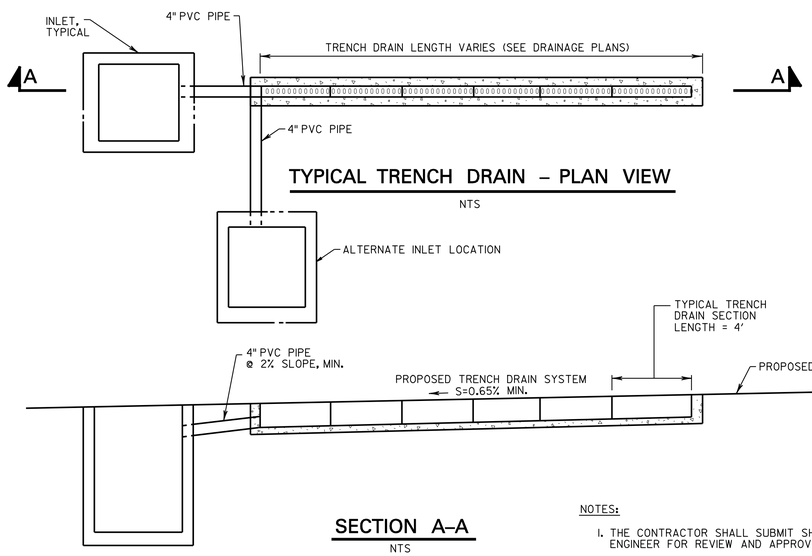

TYPICAL TRENCH DRAIN – PLAN VIEW

NTS

SECTION A–A

NTS

NOTES:

1. THE CONTRACTOR SHALL SUBMIT SHOP DRAWING'S TO THE ENGINEER FOR REVIEW AND APPROVAL PRIOR TO INSTALLATION.
2. NO SEPARATE PAYMENT WILL BE MADE FOR 4" PVC PIPE.

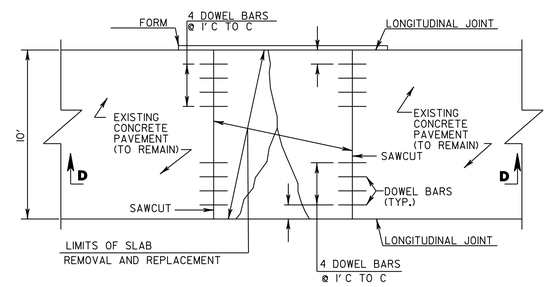

PLAN

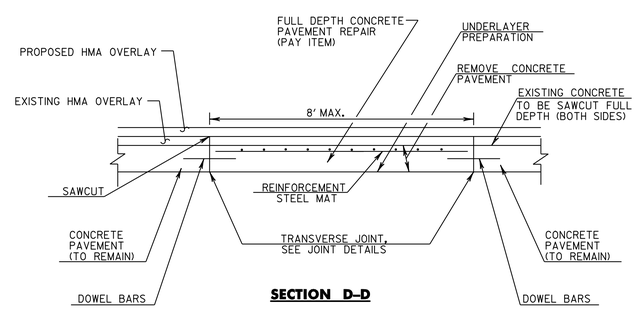

SECTION D–D

FULL DEPTH REINFORCED CONCRETE PAVEMENT REPAIR, VES

NTS

NOTES:

1. SAWCUTS SHALL BE MADE PERPENDICULAR TO BASELINE.
2. INITIAL SAWCUT IS NOT REQUIRED FOR BUTT JOINTS.
3. A MINIMUM OF 3" CONCRETE COVER IS REQUIRED OVER REINFORCEMENT STEEL MAT.
4. FOR BUTT JOINT DETAIL, TRANSVERSE JOINT LAYOUT AND GROUT RETENTION DISK DETAIL SEE STANDARD DETAIL CD 453-1.
5. SPACE CONTRACTION JOINTS AND CONTRACTION/BUTT JOINTS EQUIDISTANT AND NOT MORE THAN 20' APART.
6. LOCATION OF FULL DEPTH REINFORCED CONCRETE PAVEMENT REPAIR IS INDICATED IN THE TABLE.

Route 46	Route 46 EB		Route 46 WB	
Sta	Left Lane	Right Lane	Left Lane	Right Lane
86+29		9 SY	9 SY	
86+64	9 SY			9 SY
86+99	9 SY			9 SY
87+34	9 SY		9 SY	
87+69	9 SY		9 SY	9 SY
88+04			9 SY	9 SY
88+39				
88+74				9 SY
89+09	9 SY	9 SY	9 SY	9 SY
89+44	9 SY	9 SY	9 SY	9 SY
89+79	9 SY	9 SY	9 SY	9 SY
90+14		9 SY		
90+49		9 SY		9 SY
90+84	9 SY	9 SY		9 SY
91+19	9 SY		9 SY	
91+54	9 SY	9 SY	9 SY	
91+89	9 SY			

DTL-44
DTL-44

NEW JERSEY DEPARTMENT OF TRANSPORTATION

CONSTRUCTION DETAILS

ROUTE U.S. 46 LITTLE FERRY CIRCLE

CONTRACT NO. 069950373

PARSONS BRINCKERHOFF, INC.
CERTIFICATION OF AUTHORIZATION NO. 24GA28029800

MICHAEL D. HELMLINGER
N.J. PROFESSIONAL ENGINEER NO. 24GE03812100

PARSONS BRINCKERHOFF CADD DATA
OPERATOR HeNg QUEUE \\Ampr1t01\PRIPL03_BW.IP
PLOT DATE 06-MAR-2013 15:35
PENTABLE ehx.tbl
DESIGN FILE T:\20063\CD07.dgn